Intel® Omni-Path Fabric Switches

Hardware Installation Guide

December 2016

Doc. No.: H76456Rev 5.0US

INFORMATION IN THIS DOCUMENT IS PROVIDED IN CONNECTION WITH INTEL PRODUCTS. NO LICENSE, EXPRESS OR IMPLIED, BY ESTOPPEL OR OTHERWISE, TO ANY INTELLECTUAL PROPERTY RIGHTS IS GRANTED BY THIS DOCUMENT. EXCEPT AS PROVIDED IN INTEL'S TERMS AND CONDITIONS OF SALE FOR SUCH PRODUCTS, INTEL ASSUMES NO LIABILITY WHATSOEVER AND INTEL DISCLAIMS ANY EXPRESS OR IMPLIED WARRANTY, RELATING TO SALE AND/OR USE OF INTEL PRODUCTS INCLUDING LIABILITY OR WARRANTIES RELATING TO FITNESS FOR A PARTICULAR PURPOSE, MERCHANTABILITY, OR INFRINGEMENT OF ANY PATENT, COPYRIGHT OR OTHER INTELLECTUAL PROPERTY RIGHT.

A "Mission Critical Application" is any application in which failure of the Intel Product could result, directly or indirectly, in personal injury or death. SHOULD YOU PURCHASE OR USE INTEL'S PRODUCTS FOR ANY SUCH MISSION CRITICAL APPLICATION, YOU SHALL INDEMNIFY AND HOLD INTEL AND ITS SUBSIDIARIES, SUBCONTRACTORS AND AFFILIATES, AND THE DIRECTORS, OFFICERS, AND EMPLOYEES OF EACH, HARMLESS AGAINST ALL CLAIMS COSTS, DAMAGES, AND EXPENSES AND REASONABLE ATTORNEYS' FEES ARISING OUT OF, DIRECTLY OR INDIRECTLY, ANY CLAIM OF PRODUCT LIABILITY, PERSONAL INJURY, OR DEATH ARISING IN ANY WAY OUT OF SUCH MISSION CRITICAL APPLICATION, WHETHER OR NOT INTEL OR ITS SUBCONTRACTOR WAS NEGLIGENT IN THE DESIGN, MANUFACTURE, OR WARNING OF THE INTEL PRODUCT OR ANY OF ITS PARTS.

Intel may make changes to specifications and product descriptions at any time, without notice. Designers must not rely on the absence or characteristics of any features or instructions marked "reserved" or "undefined". Intel reserves these for future definition and shall have no responsibility whatsoever for conflicts or incompatibilities arising from future changes to them. The information here is subject to change without notice. Do not finalize a design with this information.

The products described in this document may contain design defects or errors known as errata which may cause the product to deviate from published specifications. Current characterized errata are available on request.

Contact your local Intel sales office or your distributor to obtain the latest specifications and before placing your product order.

Copies of documents which have an order number and are referenced in this document, or other Intel literature, may be obtained by calling 1-800-548-4725, or go to: http://www.intel.com/design/literature.htm.

Intel and the Intel logo are trademarks of Intel Corporation in the U.S. and/or other countries.

*Other names and brands may be claimed as the property of others.

Copyright © 2015 - 2016, Intel Corporation. All rights reserved.

Contents

1.0 Introduction 9
1.1 Intended Audience 9
1.2 Related Materials 9
1.3 Documentation Conventions 10
1.4 Laser Safety Information 11
1.5 Electrostatic Discharge Sensitivity (ESDS) Precautions 11
1.6 License Agreements 11
1.7 Technical Support 11
1.8 Safety Information 12
1.8.1 Statement 1: 12
1.8.2 Statement 2: 14
1.8.3 Statement 3: 16
1.8.4 Statement 4: 17
1.8.5 Statement 5: 19
1.8.6 Statement 6: 21
1.8.7 Statement 7: 22

2.0 Installation 25
2.1 Planning the Installation 25
2.1.1 Cable Requirements 25
2.1.2 Uninterruptible Power Supply Equipment 27
2.2 Installation Tasks Checklist 28
2.2.1 Tools and Equipment Required 28
2.2.2 Check the Installation Site 28
2.2.3 Mark the Rack 29
2.3 Omni-Path Fabric Edge Switch Installation 30
2.3.1 Mounting Hardware Kit Contents: 30
2.3.2 Rack Mounting 30
2.3.3 Installing the Airflow Baffles 34
2.3.4 Installing the Switch Fascia 36
2.3.5 Reversing the Fan Airflow 37
2.3.6 Installing the Q7 Management Module 40
2.4 Omni-Path Director Class Switches 100 Series Installation 42
2.4.1 Mounting Hardware Kit Contents: 42
2.4.2 Unpacking the Switch 42
2.4.3 Installation Tasks 46
2.4.4 Installing the Optional Cable Management Guide 53
2.4.5 Installing Director Class Modules 54
2.5 Connect Equipment to the Ports and Power On the System 59
2.5.1 Director Class Switch Port and Slot Numbering 60
2.5.2 Leaf Module Port Numbering 61
2.5.3 Edge Switch Cabling Recommendations 62
2.6 Setting Up the USB Console 63
2.7 Bringing Up the System For the First Time 63
2.7.1 Start-up Procedures 63
2.7.2 Changing the Switch IP Address and Default Gateway through the CLI 63
2.7.3 Updating the Management Module IP Addresses in a Director Class Redundant Management Configuration 64
2.8 Component LEDs 66
2.8.1 Edge Switch 66
2.8.2 Director Class LEDs 70

Figures

1 Laser Safety Information 11
2 QSFP Cable Connector Orientation 26
3 Copper Cable Bend Radius 27
4 Fiber Optic Bend Radius 27
5 Omni-Path Edge Switch Rail 30
6 Rail Installation Pin 31
7 Installed the Rack Rails 31
8 Omni-Path Fabric Edge Switch Mounted in a Four Post Standard Rack 32
9 Switch Rail Adjustments 33
10 Rail Adjustment Notches 33
11 Edge Baffle (Top View) 34
12 Secure the Top Baffle to the Switch 34
13 Remove Rail Post 35
14 Insert Clamp on Baffles 35
15 Clamp over Rail Post 35
16 Reattach the Rail Post 36
17 Switch Fascia 36
18 Rail Posts for Fascia Installation 37
19 Switch Cover Thumbscrews (Top View) 38
20 Fan Assembly Rotation 38
21 Wire Assembly Strain Relief and Airflow Direction Indicators 39
22 Q7 Management Module 40
23 Management Module Slot 40
24 Installing the Q7 Module 41
25 Q7 Module Mounting Screw 41
26 Unpacking the Switch (1) 42
27 Unpacking the Switch (2) 43
28 Unpacking the Switch (3) 43
29 Unpacking the Switch (4): Accessory Kit 44
30 Unpacking the Switch (5) 44
31 Unpacking the Switch (6) 45
32 Unpacking the Switch (7) 45
33 Measure the Rack 46
34 Preset the Adjustable Rails 46
35 Install Fixture Brackets 47
36 Secure Platform to Rack 47
37 Secure the Plenums to Top of Platform Rails 48
38 Secure the Top of the Baffles to the Rack Rails 48
39 Completed Platform Assemblies 49
40 Slide the Chassis into the Rack 50
41 Fasten the Chassis to the Rack 51
42 Completed Switch Installations 52
43 Installing Cable Management 53
44 Module Installation 1 55
45 Module Installation 2 56
46 Module Installation 3 56
47 Module Installation 4 56
48 Module Installation 5 57
49 Edge Switch Serial and Ethernet Ports 59
50 Director Switch Serial and Ethernet Ports 59
51 Director Class Leaf Slot Numbering 60
52 Leaf Module Port Numbering 61
53 Chassis Viewer GUI Leaf Port Stats Screen 61

54 48 Port Edge Switch Cabling Recommendations 62
55 Edge Switch LEDs 66
56 Ports, Fabric Manager (FM), Managed (M), and FM Switch LEDs 67
57 Activating the FM Enable Switch LED 68
58 Power Supply LEDs 69
59 Airflow Direction LED 69
60 Management Module LEDs 70
61 Leaf Module LEDs 71
62 Spine Module LEDs 72
63 SEEB Module LEDs 73
64 Director Class Fan LEDs 74
65 Director Class Power Supply LEDs 75

Tables

1 Related Documentation for this Release 9
2 Cable Bend Radius Guidelines 26

Date	Revision	Description
December 2016	5.0	Document updated for Revision 5.0
August 2016	4.0	Document updated for Revision 4.0
May 2016	3.0	Document updated for Revision 3.0
February 2016	2.0	Document updated for Revision 2.0
November 2015	1.0	Document updated for Revision 1.0

§ §

1.0 Introduction

This manual describes the hardware installation and initial configuration tasks for the Intel® Omni-Path Switches 100 Series. This includes:

- Intel® Omni-Path Edge Switches 100 Series, 24 and 48-port configurable edge switches
- Intel® Omni-Path Director Class Switches 100 Series

This manual is organized as follows:

Section 1.0 describes the intended audience, technical support and product safety information.

Section 2.0 describes the hardware installation and initial configuration tasks.

1.1 Intended Audience

This manual is intended to provide network administrators and other qualified personnel a reference for hardware installation and initial configuration for the switches.

1.2 Configurator

The Cluster Configurator for Intel® Omni-Path Fabrics is available at: http://www.intel.com/content/www/us/en/high-performance-computing-fabrics/omni-path-configurator.html.

This tool generates sample cluster configurations based on key cluster attributes, including a side-by-side comparison of up to four cluster configurations. The tool also generates parts lists and cluster diagrams.

1.3 Related Materials

Table 1. Related Documentation for this Release (Sheet 1 of 2)

Document Title
Hardware Documents
Intel® Omni-Path Fabric Switches Hardware Installation Guide
Intel® Omni-Path Fabric Switches GUI User Guide
Intel® Omni-Path Fabric Switches Command Line Interface Reference Guide
Intel® Omni-Path Edge Switch Platform Configuration Reference Guide
Intel® Omni-Path Fabric Managed Switches Release Notes
Intel® Omni-Path Fabric Externally-Managed Switches Release Notes
Intel® Omni-Path Host Fabric Interface Installation Guide
Fabric Software Documents
Intel® Omni-Path Fabric Software Installation Guide
Intel® Omni-Path Fabric Suite Fabric Manager User Guide
Intel® Omni-Path Fabric Suite FastFabric User Guide
Intel® Omni-Path Fabric Host Software User Guide
Intel® Omni-Path Fabric Suite Fabric Manager GUI Online Help

Table 1. Related Documentation for this Release (Sheet 2 of 2)

Document Title
Intel® Omni-Path Fabric Suite Fabric Manager GUI User Guide
Intel® Omni-Path Fabric Suite FastFabric Command Line Interface Reference Guide
Intel® Performance Scaled Messaging 2 (PSM2) Programmer's Guide
Intel® Omni-Path Fabric Performance Tuning User Guide
Intel® Omni-Path Host Fabric Interface Platform Configuration Reference Guide
Intel® Omni-Path Fabric Software Release Notes
Intel® Omni-Path Fabric Manager GUI Release Notes
Intel® Omni-Path Storage Router Design Guide
Building Lustre Servers with Intel® Omni-Path Architecture Application Note*

1.4 Documentation Conventions

This guide uses the following documentation conventions:

- *Note:* provides additional information.
- *Caution:* indicates the presence of a hazard that has the potential of causing damage to data or equipment.
- *Warning:* indicates the presence of a hazard that has the potential of causing personal injury.
- Text in blue font indicates a hyperlink (jump) to a figure, table, or section in this guide, and links to Web sites are also shown in blue. For example:
  - Table 2 lists problems related to the user interface and remote agent.
  - See "Installation Checklist" on page 6.
  - For more information, visit www.intel.com.
- Text in **bold** font indicates user interface elements such as a menu items, buttons, check boxes, or column headings. For example:
  - Click the **Start** button, point to **Programs**, point to **Accessories**, and then click **Command Prompt**.
  - Under **Notification Options**, select the **Warning Alarms** check box.
- Text in `Courier` font indicates a file name, directory path, or command line text. For example:
  - To return to the root directory from anywhere in the file structure: Type `cd /root` and press ENTER.
  - Enter the following command: `sh ./install.bin`
- Key names and key strokes are indicated with UPPERCASE:
  - Press CTRL+P.
  - Press the UP ARROW key.
- Text in *italics* indicates terms, emphasis, variables, or document titles. For example:
  - For a complete listing of license agreements, refer to the *Intel Software End User License Agreement*.
  - What are *shortcut keys*?
  - To enter the date type *mm/dd/yyyy* (where *mm* is the month, *dd* is the day, and *yyyy* is the year).

- Topic titles between quotation marks identify related topics either within this manual or in the online help throughout this document.

1.5 Laser Safety Information

This product may use Class 1 laser optical transceivers to communicate over the fiber optic conductors. The U.S. Department of Health and Human Services (DHHS) does not consider Class 1 lasers to be hazardous. The International Electrotechnical Commission (IEC) 825 Laser Safety Standard requires labeling in English, German, Finnish, and French stating that the product uses Class 1 lasers. Because it is impractical to label the transceivers, the following label is provided in this manual.

Figure 1. Laser Safety Information

1.6 Electrostatic Discharge Sensitivity (ESDS) Precautions

The assemblies used in the switch chassis are ESD sensitive. Observe ESD handling procedures when handling any assembly used in the switch chassis.

1.7 License Agreements

Refer to the *Intel Software End User License Agreement* for a complete listing of all license agreements affecting this product.

1.8 Technical Support

Intel Technical Support for products under warranty is available during local standard working hours excluding Intel Observed Holidays. For customers with extended service, consult your plan for available hours. For Support information, contact your Intel representative.

1.9 Safety Information

1.9.1 Statement 1:

Disconnect Device: This unit may have more than one power cord. To reduce the risk of electrical shock, disconnect all power cords before servicing unit.

Apparaat loskoppelen: Deze eenheid heeft mogelijk meer dan een stroomkabel. Verminder het risico op een elektrische schok door alle stroomkabels los te koppelen voordat u onderhoud pleegt aan de eenheid.

Irrota laite. Yksikössä saattaa olla useampia kuin yksi virtajohto. Irrota kaikki virtajohdot ennen yksikön huoltamista, niin sähköiskun vaara pienenee.

Déconnecter l'appareil: Cette unité peut disposer de plusieurs cordons d'alimentation. Déconnectez tous les cordons d'alimentation avant son entretien pour réduire le risque d'électrocution.

Gerät trennen: Diese Komponente verfügt möglicherweise über mehrere Netzkabel. Trennen Sie alle Netzkabel bevor Sie die Komponente warten, um die Gefahr eines elektrischen Schlags zu vermeiden.

Scollegare il dispositivo: L'unità potrebbe avere più di un cavo di alimentazione. Per ridurre il rischio di scosse elettriche, scollegare tutti i cavi di alimentazione prima di intervenire sull'unità.

Frakobling av enheten: denne enheten kan ha mer enn én strømledning. For å redusere faren for elektrisk sjokk, må alle strømkablene trekkes ut før enheten vedlikeholdes.

Desligar dispositivo: Esta unidade pode ter mais de um cabo de alimentação. Para reduzir o risco de choque eléctrico, desligue todos os cabos de alimentação antes de fazer a manutenção da unidade.

Desconexión de dispositivo: Esta unidad puede tener más de un cable de alimentación eléctrica. Para reducir el riesgo de electrocución, desconecte todos los cables antes de realizar cualquier servicio técnico en la unidad.

Koppla bort enhet. Den här enheten kan ha mer än en strömsladd. Reducera risken för elektrisk stöt genom att koppla bort alla strömsladdar innan enheten underhålls.

Szüntesse meg az eszköz tápellátását: Ez az egység egynél több tápvezetékkel rendelkezhet. Az áramütés kockázatának csökkentése érdekében minden tápvezetéket húzzon ki az egység szervizelése elott.

Отключите устройство: В данном устройстве может быть более одного сетевого шнура. Во избежание поражения электрическим током отсоедините все сетевые шнуры до проведения технического обслуживания устройства.

断开装置 – 此装置可能有一个以上电源电缆。为了减少电击风险，请在维修该装置前断开所有电源电缆。

デバイスを外してください – このユニットには複数の電源ユニットが接続されている可能性があります。感電のリスクを軽減するため、ユニットを修理する前にすべての電源コードを外してください。

Desconectar dispositivo: esta unidade pode ter mais de um cabo de energia. Para reduzir o risco de choque elétrico, desconecte todos os cabos de energia antes de salvar a unidade.

장치 연결 해제: 이 장치에는 2개 이상의 전원 코드가 있을 수 있습니다. 감전 사고의 위험을 줄이기 위해 장치 서비스 전에 모든 전원 코드의 연결을 해제하십시오.

斷開裝置：此裝置可能有多根電源線。為降低電擊的風險，請在維修裝置前中斷所有電源線的連接。

ניתוק ההתקן: ייתכן שליחידה זו יש יותר מכבל חשמל אחד. כדי להפחית את הסיכון להתחשמלות, נתק את כל כבלי החשמל לפני ביצוע טיפולים ביחידה.

Odłączanie: urządzenie może być wyposażone w więcej niż jeden przewód zasilający. Aby ograniczyć ryzyko porażenia prądem elektrycznym, przed przystąpieniem do serwisowania urządzenia należy odłączyć wszystkie przewody zasilające.

Odpojení zařízení: tato jednotka může mít více napájecích kabelů. Aby se snížilo nebezpečí úrazu elektrickým proudem, před servisem a údržbou jednotky odpojte všechny napájecí kabely.

Αποσύνδεση συσκευής: αυτή η μονάδα ενδέχεται να έχει περισσότερα από ένα καλώδια τροφοδοσίας. Για να μειωθεί ο κίνδυνος ηλεκτροπληξίας, αποσυνδέστε όλα τα καλώδια τροφοδοσίας πριν από τη συντήρηση της μονάδας.

Memutuskan Hubungan Perangkat: Unit ini mungkin memiliki lebih dari satu kabel daya. Untuk mengurangi risiko sengatan listrik, putuskan semua hubungan kabel daya sebelum menyervis unit.

Cihaz Bağlantısını Kesin: Bu ünite birden fazla güç kablosuna sahip olabilir. Elektrik çarpması riskini engellemek için, üniteyi hizmete sokmadan önce tüm güç kablolarının bağlantısını kesin.

Одвојте уређај: Ова јединица може имати више од једног кабла за напајање. Да бисте смањили ризик од струјног удара, одвојте све каблове за напајање пре сервисирања јединице.

1.9.2 Statement 2:

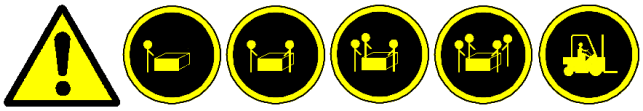

Chassis Lifting: Use safe practices when lifting.

Note: Use a team of people appropriate to the weight of each specified product and in conjunction with applicable guidelines. Whenever possible, use a mechanical lift.

Chassis optillen: Volg de veiligheidsinstructies bij het optillen.

ANMERKUNG: Gebruik genoeg mensen voor het gewicht van elk gespecificeerd product en hanteer de toepasselijke richtlijnen. Gebruik waar mogelijk een mechanisch tilapparaat.

Kotelon nostaminen. Noudata nostaessasi turvaohjeita.

HUOMAUTUS: Varaa nostamista varten laitteen painoon nähden sopiva ja sovellettavien ohjeiden mukainen määrä henkilöitä. Käytä mekaanista nosturia aina, kun se on mahdollista.

Soulever le châssis: Employez des mesures de sécurité pour soulever.

REMARQUE : Faites appel au nombre de personnes approprié en fonction du poids de chaque produit spécifique et en conjonction avec les directives applicables. Utilisez un relevage mécanique, si possible.

Anheben des Gehäuses: Lassen Sie Sicherheit beim Anheben des Gehäuses walten.

ANMERKUNG: Setzen Sie jeweils dem Gewicht jedes angegebenen Produkts und den Richtlinien entsprechend genügend Leute ein. Verwenden Sie, wenn möglich, einen mechanischen Aufzug.

Sollevamento del telaio: Durante il sollevamento, seguire le procedure di sicurezza.

NOTA: utilizzare un gruppo di persone adeguato al peso di ogni prodotto specifico e insieme alle indicazioni applicabili. Se possibile, usare un sollevatore meccanico.

Løfting av kabinettet: utvis varsomhet ved løfting.

MERK: Bruk flere personer til bæring, avhengig av vekten til hvert enkelt produkt og i samsvar med gjeldende retningslinjer. Bruk mekaniske løftemekanismer når mulig.

Levantar o chassi: Utilize práticas seguras ao levantar o chassi.

AVISO: Utilize um grupo de pessoas adequado ao peso de cada produto especificado, em conjunto com as directivas aplicáveis. Sempre que possível, utilize um dispositivo mecânico de levantamento.

Elevación del chasis: Observe las prácticas de seguridad cuando quiera elevar el chasis.

NOTA: utilice un grupo de gente apropiado al peso de cada producto especificado junto con las pautas que correspondan. Siempre que sea posible, utilice un elevador mecánico.

Lyftning av chassi. Iakttag säkerhetsanvisningar vid lyft.

OBS! Använd ett team personer lämpade för vikten på varje specificerad produkt och i samband med gällande riktlinjer. Använd en mekanisk lyftanordning närhelst det är möjligt.

A burkolat emelése – Biztonságos eljárásokat alkalmazzon az emelés során.

MERK: Az egyes termékek súlyának megfelelo fobol álló csoportot alkalmazzon, a vonatkozó irányelvek betartása mellett. Lehetoség szerint mindig használjon mechanikus emeloszerkezetet.

Подъем корпуса – Соблюдайте технику безопасности при подъеме.

ПРИМЕЧАНИЕ: Подъем каждого конкретного устройства исходя из его веса должен осуществляться несколькими лицами и в соответствии с надлежащим инструкциям. Везде, где это возможно, следует применять механические грузоподъемные устройства.

提起机箱 – 提起机箱时请采取安全措施。

注： 请按照每个具体产品的重量来使用一定的人数，并遵照适当的说明。可能的话，使用机械起重器。

シャーシの持ち上げ – シャーシを持ち上げる際は安全に配慮してください。

メモ： 各製品の重量に見合った人数で、適切なガイドラインに従って持ち上げてください。可能な場合は、リフト機を使用してください。

Suspensão do chassi: use práticas seguras ao levantá-lo.

Observação: Use uma equipe de pessoas apropriada para o peso de cada produto especificado e em conjunto com as diretrizes aplicáveis. Sempre que possível, use um elevador mecânico.

섀시 올리기: 안전 조작법을 따르십시오.

참고*:* 각 제품의 무게에 적절한 수의 사람과 함께 적절한 지침에 따라 작업하십시오. 가능한 경우 기계 리프트 장치를 사용하십시오.

底座抬升：抬升時請使用安全做法。

注意： 請針對每種指定產品的重量選擇一組適當的人員，並結合適用的指引進行作業。請盡可能使用機械抬升。

הרמת המארז: יש לנקוט באמצעי בטיחות בעת הרמה.

הערה: היעזר בכמה אנשים, בהתאם למשקל של כל מוצר מפורט, ובהתאם להנחיות הרלוונטיות. השתמש במנוף מכני במידת האפשר.

Podnoszenie obudowy: podczas podnoszenia należy postępować zgodnie z procedurami bezpieczeństwa.

Uwaga: Poszczególne produkty powinna przenosić grupa osób odpowiednia do masy ładunku zgodnie ze stosownymi wytycznymi. Jeśli to możliwe, należy użyć podnośnika mechanicznego.

Snímání skříně: při snímání dodržujte bezpečné postupy.

Poznámka: Postupy musí provádět dostatečný počet osob podle hmotnosti každého produktu a vždy je třeba postupovat podle platných zásad. Bude-li to možné, používejte mechanický zvedák.

Ανύψωση του περιβλήματος: ακολουθείτε ασφαλείς πρακτικές κατά την ανύψωση.

Σημείωση: Χρησιμοποιείτε ομάδα ατόμων ανάλογα με το βάρος του κάθε προϊόντος και σύμφωνα με τις ισχύουσες οδηγίες. Όταν είναι εφικτό, χρησιμοποιήστε μηχανικό ανυψωτικό.

Mengangkat Kerangka: Gunakan praktik aman saat mengangkat.

Catatan: Gunakan satu kelompok orang yang sesuai dengan berat dari masing-masing produk khusus dan setara dengan pedoman yang berlaku. Ketika dimungkinkan, gunakan lift mekanis.

Şasi Kaldırma: Kaldırma sırasında güvenlik uygulamlarını kullanın.

Not: Belirtilen her bir ürün ağırlığına uygun sayıda kişi içeren bir ekiple birlikte geçerli yönergeleri kullanın. Eğer mümkünse mekanik kaldırma kullanın.

Подизање шасије: Примените безбедносне мере приликом подизања.

Напомена: Користите број људи који одговара тежини сваког наведеног производа, а који је у вези са примењивим смерницама. Кад год је могуће, користите механички подизач.

1.9.3 Statement 3:

Energy Hazard: To reduce risk of electric shock, keep hands and fingers out of the power supply bays and backplane areas.

Stroomgevaar: Reduceer het risico op een elektrische schok door handen en vingers weg te houden bij de voedingscompartimenten en de gebieden rond de centrale printplaat.

Sähköiskun vaara. Voit vähentää sähköiskuille altistumista, kun vältät koskettamasta virtalähdepaikkoja ja keskuspiirilevyä.

Danger électrique: Pour réduire le risque d'électrocution, gardez vos mains hors des baies d'alimentation et des zones destinées aux cartes de circuits imprimés.

Gefahr vor elektrischem Schock: Um der Gefahr vor elektrischem Schock vorzubeugen, halten Sie Hände und Finger den Netzteilschächten und der Rückwand fern.

Pericolo di scosse: Per ridurre il rischio di scosse elettriche, allontanare le mani e le dita dagli alloggiamenti degli alimentatori e dalle aree della piastra base.

Strømfare: hold fingre og hender unna strømforsyningsrom og kretskort for å unngå elektrisk sjokk.

Risco de choque eléctrico: Para reduzir o risco de choque eléctrico, mantenha as mãos e os dedos fora dos compartimentos da fonte de alimentação e das áreas de backplane.

Peligro de energía: Para reducir el riesgo de electrocución, mantenga las manos y los dedos alejados de los compartimentos de la fuente de alimentación eléctrica y del circuito impreso central.

Risk för elektrisk stöt. Reducera risken för elektrisk stöt genom att hålla händer och fingrar borta från strömförsörjningsfack och bakpanelsområden.

Áramütés veszélye – Az áramütés kockázatának csökkentése érdekében kezeit és ujjait tartsa távol a tápcsatlakozóktól és a hátsó területektol.

Опасное напряжение – Во избежание поражения электрическим током, не прикасайтесь к клеммам электропитания и к центральной электронной плате.

电能危害 – 为了减少电击风险，手和指应远离电源架和印刷电路板区域。

エネルギーの危険 – 感電のリスクを軽減するため、電源装置ベイおよびバックプレーン周辺に手や指を近づけないでください。

Perigo de energia: para reduzir o risco de choque elétrico, mantenha as mãos e os dedos longe dos compartimentos de alimentação e das áreas de backplane.

에너지 위험: 감전 사고의 위험을 줄이기 위해 손과 손가락을 전원 공급 장치 베이 및 뒷판 영역에 대지 마십시오.

能量危害：為降低電擊的風險，請不要用雙手與手指觸碰電源架及底板區域。

סכנת אנרגיה: כדי להפחית את הסיכון להתחשמלות, הרחק כפות ידיים ואצבעות מהאזורים של מפרצי ספקי הכוח וממשטח החומרה.

Zagrożenie elektryczne: aby ograniczyć ryzyko porażenia prądem elektrycznym, należy trzymać ręce i palce z dala od wnęk na zasilacze i płyty montażowej.

Nebezpečí zásahu elektrickým proudem: aby se snížilo nebezpečí úrazu elektrickým proudem, nevkládejte prsty do prostoru zdroje napájení a nedotýkejte se částí propojovacího rozhraní.

Ενεργειακός κίνδυνος: για τη μείωση του κινδύνου ηλεκτροπληξίας, μην αγγίζετε τις εσοχές τροφοδοσίας και τη βασική πλακέτα.

Bahaya Energi: Untuk mengurangi risiko sengatan listrik, jauhi tangan dan jari dari siku catu listrik dan area belakang mesin.

Elektrik Tehlikesi: Elektrik çarpma riskini indirgemek için, ellerinizi ve parmaklarınızı güç kablosu girişleri ve arka düzlem alanlarından uzak tutunuz.

Опасност од струје: Да бисте смањили ризик од струјног удара, држите руке и прсте ван отвора за напонску јединицу и ван области основне плоче.

1.9.4 Statement 4:

Laser Radiation: certain optical products may emit laser radiation. Removing covers could result in exposure to hazardous laser radiation. Radiation may be emitted from connectors or fiber optic cables.

Laserstraling: bepaalde optische producten kunnen laserstraling verspreiden. Het verwijderen van dekplaten kan resulteren in blootstelling aan schadelijke laserstraling. Straling kan worden afgegeven door connectoren of glasvezelkabels.

Lasersäteily. Jotkut optiset laitteet saattavat päästää lasersäteilyä. Niiden suojusten poistaminen saattaa altistaa vaaralliselle lasersäteilylle. Säteily voi tulla liittimistä tai optisista kuitukaapeleista.

Rayonnement laser: Certains produits optiques peuvent produire un rayonnement laser. Le retrait de capots peut engendrer une exposition à un rayonnement laser dangereux. Ce rayonnement peut provenir des connecteurs ou des câbles en fibre optique.

Laserstrahlung: manche optischen Produkte geben Laserstrahlung ab. Beim Entfernen der Abdeckungen können Sie möglicherweise gefährlicher Laserstrahlung ausgesetzt werden. Laserstrahlung kann von Anschlüssen oder Faseroptikkabeln abgegeben werden.

Radiazione laser: Alcuni prodotti ottici potrebbero emettere la radiazione laser. La rimozione delle coperture potrebbe causare l'esposizione alla radiazione laser pericolosa. I connettori o i cavi in fibra ottica potrebbero emettere radiazioni.

Laserstråling: visse optiske produkter kan gi fra seg laserstråling. Dersom dekslene tas av, kan dette medføre utsettelse for farlig laserstråling. Strålingen kan komme fra kontakter eller fiberoptiske kabler.

Radiação laser: Certos produtos ópticos podem emitir radiação laser. A remoção de tampas pode resultar na exposição a níveis perigosos de radiação laser. A radiação pode ser emitida de conectores ou de cabos de fibra óptica.

Radiación de láser: Ciertos productos ópticos pueden emitir radiación de láser. Quitar las cubiertas podría resultar en la exposición peligrosa a radiación de láser. La radiación se puede emitir de conectores o cables de fibra óptica.

Laserstrålning. Vissa optiska produkter kan utsända laserstrålning. Borttagning av skydd kan resultera i exponering för riskfylld laserstrålning. Strålning kan utsändas från kopplingsdetaljer eller fiberoptiska kablar.

Lézersugárzás – Bizonyos optikai termékek lézersugárzást bocsátanak ki. A burkolatok eltávolításával veszélyes lézersugárzásnak tehetik ki magukat. Sugárzást csatlakozók vagy üvegszálas optikai kábelek bocsáthatnak ki.

Лазерное излучение! – некоторые оптические устройства являются источником лазерного излучения. При снятии крышки существует опасность воздействия лазерного излучения на персонал. Лазерное излучение может испускаться соединительными гнездами волоконно-оптических кабелей.

激光辐射 – 某些光学产品会发出激光辐射。移开盖板时会使人暴露于有害激光辐射。连接器或光纤电缆都可能发出辐射。

レーザー光線 – 特定の光学製品からレーザー光線が放射される可能性があります。カバーを取り除くと、危険なレーザー光線を被爆する場合があります。光線はコネクタまたは光ファイバーケーブルから放射されることがあります。

Radiação a laser: certos produtos óticos podem emitir radiação a laser. A remoção dos revestimentos pode resultar em exposição à radiação a laser. A radiação pode ser emitida de conectores para cabos de fibra óptica.

레이저 방사: 특정 광학 제품에서는 레이저 방사가 방출될 수 있습니다. 덮개를 제거하면 위험한 레이저 방사에 노출될 수 있습니다. 방사는 커넥터나 광섬유 케이블에서 방출될 수 있습니다.

雷射輻射：某些光學產品可能會散發雷射輻射。移除蓋板可能會使您暴露在危險的雷射輻射中。連接器或是光纖纜線都可能會散發輻射。

קרינת לייזר: מוצרים אופטיים מסוימים עשויים לפלוט קרינת לייזר. הסרת כיסויים עלולה להוביל לחשיפה לקרינת לייזר מסוכנת. קרינה עשויה להיפלט ממחברים או מכבלי סיבים אופטיים.

Promieniowanie laserowe: niektóre produkty optyczne mogą emitować promienie lasera. Zdjęcie osłon może grozić wystawieniem się na niebezpieczne promieniowanie laserowe. Złącza i kable światłowodowe mogą emitować promieniowanie.

Laserové záření: jistá optická zařízení mohou vyzařovat laserové záření. Po odstranění krytů proto můžete být vystaveni nebezpečnému laserovému záření. Záření může vycházet z konektorů nebo optických kabelů.

Ακτινοβολία λέιζερ: ορισμένα οπτικά προϊόντα ενδέχεται να εκπέμπουν ακτινοβολία λέιζερ. Η αφαίρεση των καλυμμάτων ενδέχεται να προκαλέσει έκθεση σε επικίνδυνη ακτινοβολία λέιζερ. Η ακτινοβολία ενδέχεται να εκπέμπεται από συνδέσμους ή καλώδια οπτικών ινών.

Radiasi Laser: produk optik tertentu mungkin menghasilkan radiasi laser. Melepas penutup mungkin menyebabkan terpaparnya radiasi laser yang berbahaya. Radiasi mungkin dipancarkan dari konektor atau kabel optik fiber.

Lazer Radyasyon: belirli optik ürünler lazer radyasyon yayabilir. Kapakların çıkarılması tehlikeli lazer radyasyonuna maruz kalmaya neden olabilir. Radyasyon, konektörler veya fiber optik kablolardan yayılabilir.

Ласерско зрачење: Неки оптички производи могу емитовати ласерско зрачење. Уклањање поклопаца може довести до излагања опасном ласерском зрачењу. Зрачење се може емитовати са конектора или каблова са оптичким влакнима.

1.9.5 Statement 5:

No user-serviceable parts: Hazardous energy levels may be present inside power supplies and circuit card modules. Do not remove covers.

Onderdelen die niet door de gebruiker mogen worden onderhouden: Er kunnen gevaarlijke energieniveaus aanwezig zijn binnen voedingen en printplaten. Verwijder in geen geval dekplaten.

Ei osia, jotka käyttäjä voisi vaihtaa. Virtalähteiden ja piirikorttimoduulien sisällä saattaa olla vaarallisen suuri virta tai jännite. Älä poista niiden suojuksia.

Pièces non entretenues par l'utilisateur: Des niveaux d'électricité dangereux peuvent résider à l'intérieur des sources d'alimentation et des modules de carte de circuits imprimés. Ne retirez pas les capots.

Wartung nur durch Fachmann möglich: Gefährlich hohe Stromstärken sind in Netzteilen und in den Modulen der Busleiterplatte vorhanden. Entfernen Sie die Abdeckungen nicht.

Non sono presenti componenti riparabili dall'utente: Livelli pericolosi di energia potrebbero essere presenti all'interno degli alimentatori e dei moduli delle schede dei circuiti. Non rimuovere le coperture.

Ingen deler som kan vedlikeholdes av brukeren: farlig strømmengde kan finnes inni strømforsynings- og kretskortmoduler. Fjern ikke dekslene.

Não há peças a serem consertadas pelo utilizador: Níveis perigosos de energia podem estar presentes em fontes de alimentação e em módulos de placas de circuito. Não remova as tampas.

No hay piezas técnicas: Niveles peligrosos de energía pueden hacerse presentes en las fuentes de alimentación eléctrica. No quite las cubiertas.

Inga delar kan underhållas av användaren. Farliga energinivåer kan finnas i strömförsörjningsenheter kretskortmoduler. Ta inte bort skydd.

A berendezés nem tartalmaz felhasználó által javítható alkatrészeket – Veszélyes energiaszint lehet a tápegységeken és az áramköri kártyamodulokon belül. Ne távolítsa el a burkolatokat.

Устройство не содержит деталей, предназначенных для обслуживания пользователем – Блоки питания и электрические платы устройства являются источником опасного электрического напряжения. Снимать крышки запрещено.

禁止用户维修部件 – 电源和电路卡模块内部可能存在一定水平的有害能。切勿移除盖板。

ユーザー修理可能部品なし – 電源装置および回路カードモジュール内のエネルギーが危険なレベルに達している場合があります。カバーを外さないでください。

Não é nenhuma peça que possa ser reparada pelo usuário, não é? Os níveis de energia perigosos podem estar presentes dentro de fontes de alimentação e em módulos de cartões de circuito. Não remova os revestimentos.

사용자 교체 가능 부품 없음: 전원 공급 장치 및 회로 카드 모듈 내에는 위험한 에너지 수준이 존재할 수 있습니다. 덮개를 제거하지 마십시오.

非使用者可維修零件：電源及電路卡模組內可能存在危害能量位準。請不要移除蓋板。

המוצר אינו מכיל חלקים הניתנים לטיפול על ידי המשתמש: רמות אנרגיה מסוכנות עלולות להימצא בתוך ספקי כוח ומודולי כרטיסי המעגלים. אין להסיר כיסויים.

Brak części serwisowanych przez użytkownika: wewnątrz zasilaczy i modułów kart może występować niebezpieczny poziom energii. Nie zdejmować osłon.

Zařízení neobsahuje žádné součásti, jejichž údržbu by mohl provádět sám uživatel: uvnitř zdrojů napájení a modulů s kartami s tištěnými spoji se může nacházet nebezpečné napětí. Neodstraňujte kryty.

Δεν υπάρχουν εξαρτήματα με δυνατότητα επισκευής από το χρήστη: ενδέχεται να υφίστανται επικίνδυνα επίπεδα ενέργειας εντός μονάδων τροφοδοτικού και μονάδων κάρτας κυκλώματος. Μην αφαιρείτε τα καλύμματα.

Tidak ada bagian yang dapat diservis pelanggan: Tingkat energi berbahaya mungkin terjadi di dalam catu daya dan modul kartu sirkuit. Jangan melepaskan penutup.

Kullanıcı tarafından kullanılamaz parçalar: Güç kaynakları ve devre kart modülleri içinde tehlikeli seviyede elektrik mevcut olabilir. Kapakları çıkarmayın.

Делови које корисници не могу сервисирати: Опасни нивои напона могу бити присутни унутар напонских јединица и модула штампаних картица. Немојте уклањати поклопце.

1.9.6 Statement 6:

Equipment Installation: Only qualified personnel should be allowed to install, remove or replace chassis or modules.

Installatie apparatuur: Voor het installeren, verwijderen of vervangen van chassis of modules mag alleen gekwalificeerd personeel worden gebruikt.

Laitteiston asentaminen. Vain pätevä asentaja saa asentaa, poistaa ja vaihtaa koteloita tai moduuleja.

Installation de l'équipement: Seul un personnel qualifié est autorisé à installer, retirer ou remplacer des châssis ou modules.

Geräteinstallation: Die Installation, Entfernung oder Erneuerung von Gehäuse und Modulen sollte nur durch Fachpersonal erfolgen.

Installazione dell'apparecchiatura: Solo il personale qualificato è autorizzato ad installare, rimuovere o ricollocare il telaio o i moduli.

Utstyrsinstallasjon: kun kvalifisert personell kan installere, fjerne eller skifte ut kabinetter eller moduler.

Instalação do equipamento: A instalação, troca ou remoção de chassis ou módulos só deve ser feita por técnicos qualificados.

Instalación del equipo: Solamente se permite personal cualificado para realizar la instalación, quitar o sustituir módulos o chasis.

Installation av utrustning. Enbart kvalificerad personal får installera, ta bort eller byta ut chassin eller moduler.

Berendezés telepítése – Kizárólag szakképzett személyzet számára megengedett a burkolat vagy a modulok telepítése, eltávolítása vagy cseréje.

Установка оборудования – Установка, удаление и замена корпуса или модулей устройства должна производиться только квалифицированным техническим персоналом.

设备安装 – 只有有资格的技术人员才允许安装、卸下或装回机箱或模块。

装置の取り付け – シャーシまたはモジュールの取り付け、取り外しまたは取替えは、有資格者のみが行うようにしてください。

Instalação de equipamento: somente funcionários qualificados devem ter permissão para instalar, remover ou substituir chassi ou módulos.

장치 설치: 자격이 있는 인원만 섀시 또는 모듈을 설치, 제거 또는 교체할 수 있습니다.

設備安裝：只有符合資格的人員才允許安裝、移除或更換底座或模組。

התקנת הציוד: יש לאפשר לעובדים מיומנים בלבד להתקין, להסיר או להחליף מארז או מודולים.

Montaż sprzętu: tylko wykwalifikowany personel może być upoważniony do montażu, demontażu lub wymiany obudowy i modułów.

Instalace vybavení: instalaci, odinstalování nebo výměnu skříně či modulů smí provádět pouze kvalifikovaní pracovníci.

Τοποθέτηση εξοπλισμού: η τοποθέτηση, αφαίρεση ή αντικατάσταση περιβλημάτων ή μονάδων πρέπει να επιτρέπεται μόνο σε εξειδικευμένο προσωπικό.

Instalasi Peralatan: Hanya staf berpengalaman yang boleh memasang, melepaskan, atau mengganti kerangka atau modul.

Ekipman Kurulumu: Şasi ve modüllerin yalnızca nitelikli personel tarafından kurulumuna, çıkarılmasına veya değiştirilmesine izin verilir.

Инсталирање опреме: Само квалификованом особљу треба дозволити да инсталира, уклања или замењује шасију или модуле.

1.9.7 Statement 7:

Adding or Replacing Modules: These modules are intended only for installation in Intel® Omni-Path Fabric base units. Always install blanks when removing an active module. They prevent exposure to energy hazards inside the unit, contain EMI, and maintain cooling air balance in the chassis.

Toevoegen of vervangen van modules: deze modules zijn alleen bedoeld voor installatie in basiseenheden uit de Intel® Omni-Path-reeks. Installeer altijd plaatshouders wanneer u een actieve module verwijdert. Deze voorkomen blootstelling aan energierisico's binnen de eenheid, bevatten EMI en handhaven de koelluchtbalans in het chassis.

Moduulien lisääminen ja vaihtaminen. Moduulit on tarkoitettu asennettavaksi vain Intel® Omni-Path -sarjan perusyksikköihin. Kun olet poistanut aktiivisen moduulin, muista aina asentaa tyhjä kappale sen paikalle. Ne estävät sähköiskuille altistumista yksikön sisällä, hillitsevät sähkömagneettisia häiriöitä (EMI) ja pitävät yllä jäähdytysilman tasaista jakautumista koteloon.

Ajouter ou remplacer des modules: Ces modules sont conçus exclusivement pour une installation avec des unités de base Intel® Omni-Path series. Installez toujours des caches de protection lors du retrait d'un module actif. Ils protègent contre les dangers électriques à l'intérieur de l'unité, limitent l'interférence électromagnétique et maintiennent un volume d’air refroidissant approprié au sein du châssis.

Hinzufügen oder Austauschen von Modulen: Diese Module sind für die Installation in Grundeinheiten der Intel® Omni-Path Serie vorgesehen. Installieren Sie stets leere Module, wenn Sie ein aktives Modul entfernen. Diese verhindern, dass Stromgefahr im Innern der Einheit entsteht, enthalten Störstrahlung und sorgen für den Kühlungsausgleich im Gehäuse.

Aggiunta o sostituzione dei moduli: I moduli sono concepiti solo per l'installazione nelle unità di base Intel® Omni-Path Serie. Quando si rimuove un modulo attivo, installare sempre le protezioni, poiché impediscono l'esposizione ai pericoli di scosse all'interno dell'unità, contengono le IEM e mantengono un equilibrio dell'aria di raffreddamento nel telaio.

Tillegging eller utskifting av moduler: disse modulene skal kun installeres i baseenhetene på Intel® Omni-Path-serien. Installer alltid tomme enheter når en aktiv modul fjernes. De forhindrer utsettelse for strømfare inni enheten, inneholder EMI og opprettholder kjølebalansen i kabinettet.

Adição ou troca de módulos: Estes módulos foram projectados para serem instalados apenas nas unidades de base Intel® Omni-Path série. Instale sempre módulos de preenchimento ("blanks") ao remover módulos activos. Eles diminuem os riscos de choque eléctrico no interior da unidade, contêm dispositivos de protecção contra interferência eletromagnética e mantêm o equilíbrio de resfriamento por ar no interior do chassi.

Agregar o sustituir módulos: Estos módulos solamente se pueden instalar en unidades de base de la serie Intel® Omni-Path. Siempre instale protectores al retirar un módulo activo. Los protectores previenen la exposición a peligros de energía dentro de la unidad, contienen EMI y mantienen el balance de enfriamiento de aire en el chasis.

Lägga till eller byta ut moduler. De här modulerna är enbart avsedda för installation i Intel® Omni-Path-seriens basenheter. Installera alltid tomenheter vid borttagning av en aktiv modul. De förhindrar exponering för energirisker på enhetens insida, hindrar EMI och upprätthåller kylluftbalansen i chassin.

Modulok hozzáadása vagy cseréje – Ezek a modulok kizárólag Intel® Omni-Path-es sorozatú bázisegységekbe építhetoek be. Aktív modul cseréjekor mindig szereljen be üres helyeket. Ezek megakadályozzák az egységen belüli energiaveszélyek kialakulását, tartalmaznak EMI-t, és fenntartják a hutolevego egyensúlyát a borításon belül.

Установка и замена модулей – Модули предназначены только для установки внутрь базовых блоков Intel® серии Omni-Path. После замены действующих модулей следует всегда устанавливать заглушки с крышками. Это обеспечивает защиту от опасного напряжения, электромагнитного излучения и надлежащий тепловой баланс внутри корпуса.

添加或装回模块 – 这些模块仅用于安装在 Intel® Omni-Path Series 基座装置。请在移除活动模块时安装空白的。它们能预防装置内部的有害能的暴露，包含 EMI，并在机箱内保持冷却空气平衡。

モジュールの追加または取替え – これらのモジュールは Intel® Omni-Path シリーズ MPFD ベースユニットへの取り付け専用です。アクティブなモジュールを取り除く際は、常にダミーを取り付けてください。これはユニット内の危険なエネルギーの露出を防止し、EMI を阻止、およびシャーシ内の空冷バランスを維持します。

Adicionando ou substituindo módulos: estes módulos destinam-se a instalação somente leitura nas unidades base do Intel® Omni-Path Fabric. Sempre instale vazios ao remover um módulo ativo. Eles impedem a exposição aos níveis perigosos de energia dentro da unidade, contêm EMI e mantêm a o balanço de ar refrigerado.

모듈 추가 또는 교체: 이러한 모듈은 Intel® Omni-Path Fabric 기반 장치에만 설치될 수 있습니다. 활성 모듈 제거 시 항상 블랭크를 장착해야 합니다. 블랭크는 장치 내부의 위험한 에너지가 노출되는 것을 방지하며 EMI를 차폐하고 섀시의 냉각 공기 밸런스를 유지합니다.

新增或更換模組：這些模組僅供安裝於 Intel® Omni-Path 架構基本裝置中。移除現行模組後，請始終安裝空模組。它們可阻止裝置內的能量危害外洩、抑制 EMI，並保持底座中的冷卻空氣平衡。

הוספה או החלפה של מודולים: מודולים אלה נועדו להתקנה ביחידות בסיס מסוג Intel® Omni-Path Fabric בלבד. בעת הסרה של מודול פעיל, יש להתקין תמיד מודולים ריקים. מודולים ריקים מונעים חשיפה לסכנות אנרגיה בתוך היחידה, חוסמים הפרעות אלקטרו-מגנטיות ושומרים על איזון אוויר הצינון בתוך המארז.

Dodawanie i wymiana modułów: moduły są przeznaczone do montażu tylko w urządzeniach podstawowych Intel® Omni-Path Fabric. Przy wyjmowaniu aktywnego modułu należy zamontować pusty moduł zastępczy (wypełniacz). Moduły takie

zapobiegają zagrożeniom elektrycznym wewnątrz urządzenia, ograniczają ilość zakłóceń elektromagnetycznych, a także ułatwiają utrzymanie odpowiedniej ilości powietrza chłodzącego w obudowie.

Přidávání nebo výměna modulů: tyto moduly jsou určeny pouze pro instalaci do základnových jednotek Intel® Omni-Path Fabric. Po vyjmutí aktivního modulu vždy nainstalujte rezervní výplně. Tyto výplně zabraňují kontaktu s nebezpečným napětím uvnitř jednotky, obsahují EMI a udržují rovnováhu vzduchového chlazení ve skříni.

Προσθήκη ή αντικατάσταση μονάδων: αυτές οι μονάδες προορίζονται μόνο για τοποθέτηση σε βασικές μονάδες Intel® Omni-Path Fabric. Τοποθετείτε πάντοτε καλύμματα, όταν αφαιρείτε μια ενεργή μονάδα. Αυτά εμποδίζουν την έκθεση σε ενεργειακούς κινδύνους εντός της μονάδας, περιορίζουν τις ηλεκτρομαγνητικές παρεμβολές και διατηρούν την ισορροπία στον αέρα ψύξης εντός του περιβλήματος.

Menambah atau Mengganti Modul: Modul-modul ini ditujukan untuk instalasi dalam unit dasar Intel® Omni-Path Fabric. Selalu pasang modul kosong saat mengeluarkan modul aktif. Modul kosong akan mencegah terpaparnya energi berbahaya di dalam unit, termasuk EMI, dan memelihara keseimbangan udara penyejuk di dalam kerangka.

Modüllerin Takılması veya Değiştirilmesi: Bu modüller yalnızca Intel® Omni-Path Fabric sistem biriminde kullanım içindir. Aktif modülleri çıkarırken daima boşluk modüllerini kurunuz. Bu boşluk modülleri, ünite içindeki elektrik tehlikelerine maruz kalmayı önlerler, EMI içerirler ve şasi içindeki hava balans soğutmasını korurlar.

Додавање или замена модула: Ови модули су предвиђени само за инсталацију у Intel® Omni-Path Fabric основне јединице. Увек инсталирајте празне модуле када уклањате неки активни модул. То спречава излагање опасности од струје, садржи EMI и одржава равнотежу расхлађеног ваздуха у шасији.

§ §

2.0 Installation

This section describes how to install and configure for first-time use:

- The Intel® Omni-Path Fabric Series switches in a network environment.

2.1 Planning the Installation

The Omni-Path switches are designed for installation in standard 19-inch equipment racks.

Racks should conform to conventional standards. Use the American National Standards Institute (ANSI)/Electronic Industries Association (EIA) standard ANSI/EIA-310-D-92 and International Electrotechnical Commission (IEC) 297

Racks should meet the following mechanical recommendations:

- Four-post, 19" rack to facilitate easy maintenance
- Universal mounting rail hole pattern identified in IEC Standard 297
- Mounting holes flush with the rails to accommodate the chassis

Note: Operation is subject to the following conditions:

Note: Use a rack grounding kit and a ground conductor that is carried back to earth or to another suitable building ground. Ground the equipment rack to earth ground.

Note: Provide enough room to work on the equipment. Clear the work site of any unnecessary materials. Make sure the equipment will have enough clearance for front and rear access.

2.1.1 Cable Requirements

2.1.1.1 Cable Distances

When planning the location of the switches, consider the distance limitations for signaling, EMI, and connector compatibility. It is recommended that the user does not exceed specified transmission rate and distance limits.

2.1.1.2 Cable Guidelines

Note: Building and electrical codes vary depending on the location. Comply with all code specifications when planning the site and installing cable.

When running cable to the equipment, consider the following:

- Do not run cables where they can be stepped on or rolled over.
- Be sure cables are intact with no cuts, bends, or nicks.
- If the user is making a cable, ensure that the cable is properly crimped.
- Provide proper strain relief for cables.
- Support cables using a cable manager mounted above connectors to avoid unnecessary weight on the cable bundles.
- Bundle cable using Velcro straps to avoid injuring cables.
- Keep all ports and connectors free of dust.
- Untwisted Pair (UTP) cables can build up Electrostatic Discharge (ESD) charges when being placed into a new installation. Before installing category 5 UTP cables,

discharge ESD from the cable by plugging it into a port on a system that is not powered on.

- When required for safety and fire rating requirements, plenum-rated cable can be used. Check the local building codes to determine when it is appropriate to use plenum-rated cable, or refer to IEC standard 850.
- In order to create enough space, QSFP cables connectors may need to be rotated when plugging into alternate rows of switch components.

Figure 2. QSFP Cable Connector Orientation

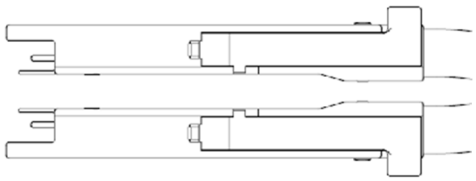

2.1.1.3 Cable Handling and Bend Radius

- Intel® Omni-Path Copper Cable 100 Series:
  - Recommended minimum bend radius is >69mm
- Intel® Omni-Path Active Optical Cable 100 Series:
  - Recommended minimum bend radius is >105 mm within 100 mm of either cable end module, and >60 mm on the rest of the cable

Table 2. Cable Bend Radius Guidelines

Intel® Omni-Path Copper Cable 100 Series	
American Wire Gauge (AWG) Size Cable	**Bend Radius**
26	>69mm
30	>66mm
Intel® Omni-Path Active Optical Cable 100 Series	
Gauge	**Bend Radius**
Optical	>105 mm within 100 mm of either cable end module >60 mm on the rest of the cable

Figure 3. Copper Cable Bend Radius

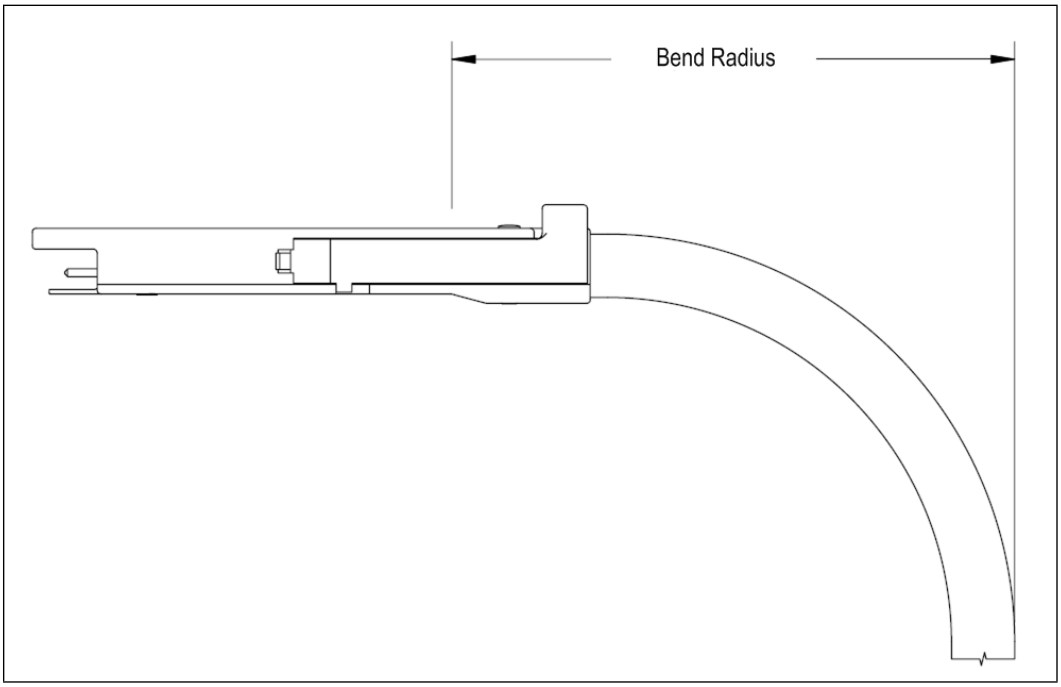

Figure 4. Fiber Optic Bend Radius

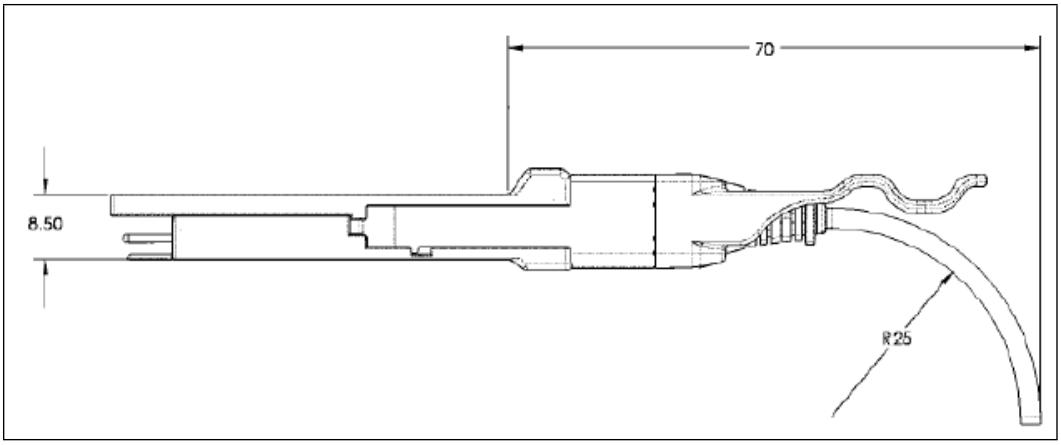

2.1.2 Uninterruptible Power Supply Equipment

Consider the following when selecting uninterruptible power supply (UPS) equipment:

- The minimum amperage requirements for a UPS:
  - Calculate VA (volt-amps): Locate the voltage and amperage requirements for each piece of equipment (usually located on a sticker on the back or bottom of the equipment). Multiply the numbers together to get VA.
  - Add the VA from each piece of equipment together to find the total VA requirement. Then add 30% to determine the minimum amperage requirements for the UPS.

- Transition time (the time necessary for the UPS to transfer from utility power to full-load battery power).
- The longest potential time period the UPS might be required to supply backup power.
- Whether the UPS unit provides online protection.

2.2 Installation Tasks Checklist

To perform the actual switch installation, the site implementation engineer must perform the following tasks, which are detailed in this section.

Caution: Be sure to review the safety information before starting the installation and during the installation process (refer to "Safety Information" on page 10).

1. Check the installation site to verify the installation of cabinet power feeds, rails, and grounding.
2. Unpack the equipment and inspect for any shipping damage. Any shipping damage should be reported to the shipping company.
3. Verify that the equipment shipped matches the packing list.
4. Mark the rack and install the mounting rails.
5. Physically install the switch in the rack.

2.2.1 Tools and Equipment Required

- An ESD wrist strap
- A #0 and #2 Phillips screwdriver
- An M6 HEX nut wrench
- Lifting device (e.g., pallet jack) for the Intel® Omni-Path Director Class Switches 100 Series

2.2.2 Check the Installation Site

The switches are designed to be installed in an existing server cabinet (not a telco cabinet), where it can be mounted in a standard equipment rack.

Be sure of the following:

- The cabinet has a full earth ground to provide reliable grounding.
- There is enough room to work on the equipment.
- The equipment will have enough clearance for front and rear access.
- The cables can be accessed easily.
- Water or moisture cannot enter the switch.
- The ambient temperature stays between 50°–113°F (5°–40° C).
- Cabinet doors do not interfere with front-to-back air flow.

The cabinet should have its own switchable power distribution. If the switch has two power supplies, it is suggested that a cabinet with dual power distribution units is used.

It is recommended that cabinet anti-tip devices are used. This is especially true if installing or removing a switch in the upper half of the cabinet when the lower half is empty.

2.2.3 Mark the Rack

Allow enough vertical space in the rack for each specific switch installation.

1. Determine the location in the rack of the bottom of the switch.
2. Mark the upper (if applicable) and lower mounting positions on the vertical rails on the front of the rack.
3. Mark the upper (if applicable) and lower mounting positions on the vertical rails on the back of the rack.

2.3 Omni-Path Fabric Edge Switch Installation

This section describes the rack mounting instructions for the 24 and 48 port Omni-Path Fabric Edge Switches in a four-post standard-depth rack. The installation of either switch is very similar; the majority of steps apply to both switches. Where applicable, any specifics for either switch are called out.

In a standard-depth rack, the distance between the front and back mounting posts is ~28" (700mm). Mounting rails for the switch are adjustable to accommodate racks with 26"– 32" between mounting posts.

2.3.1 Mounting Hardware Kit Contents:

- ESD wrist strap
- One pair of mounting rails adjustable for 26"– 32" installation range
- M6 hex head screws
- Front 1U perforated cover

2.3.2 Rack Mounting

Figure 5. Omni-Path Edge Switch Rail

1. Insert the rail installation pin in to the rack hole as shown in Figure 6. This holds the rail in place so the user can install the fan side screws. Fasten the rail using two (2) M6 screws. Torque screws to 30in-lb. Repeat this step for the second rail.

Figure 6. Rail Installation Pin

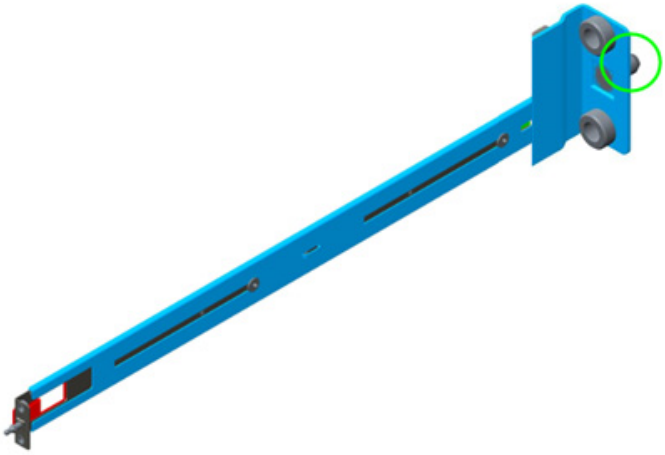

2. Fasten the port-side rails using four (4) M6 screws. Torque screws to 30in-lb. Note the orientation of mounting rails in Figure 7. The rails are shown from the front side of the rack.

Figure 7. Installed the Rack Rails

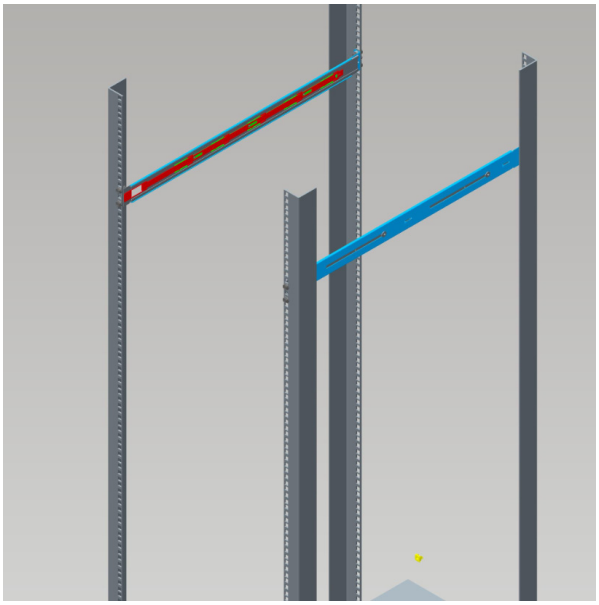

Figure 8. Omni-Path Fabric Edge Switch Mounted in a Four Post Standard Rack

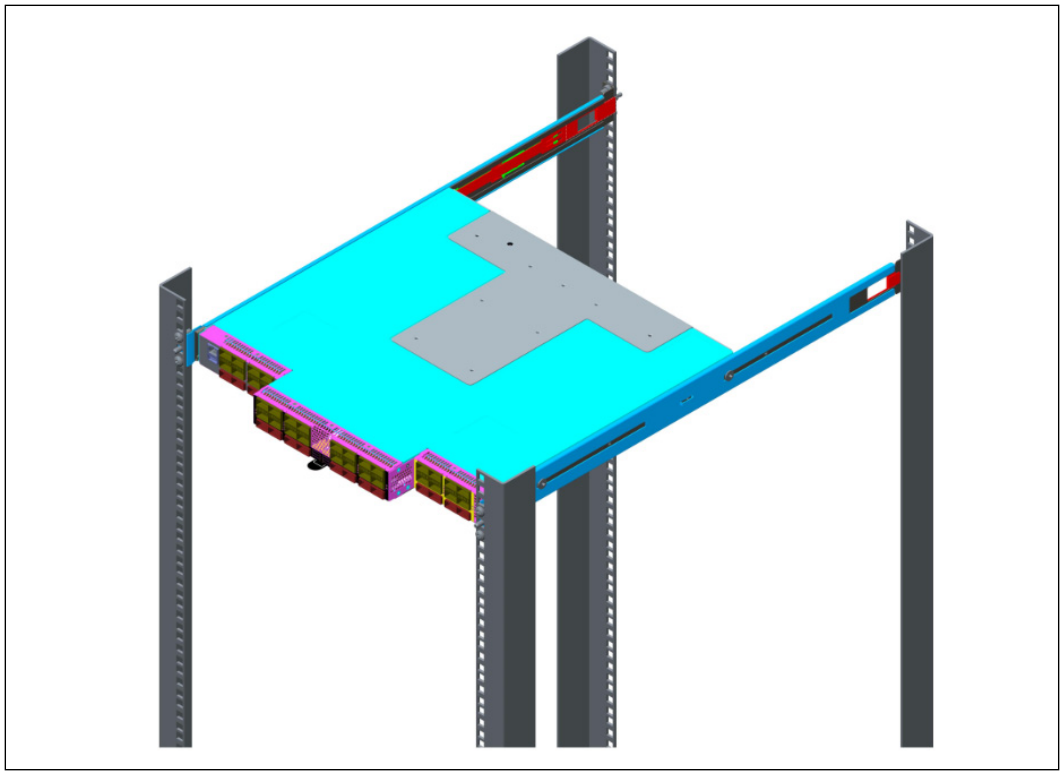

3. The rails are designed for different mounting positions, from flush mount to recessed (in 1 inch increments) as shown in Figure 9.

Figure 9. Switch Rail Adjustments

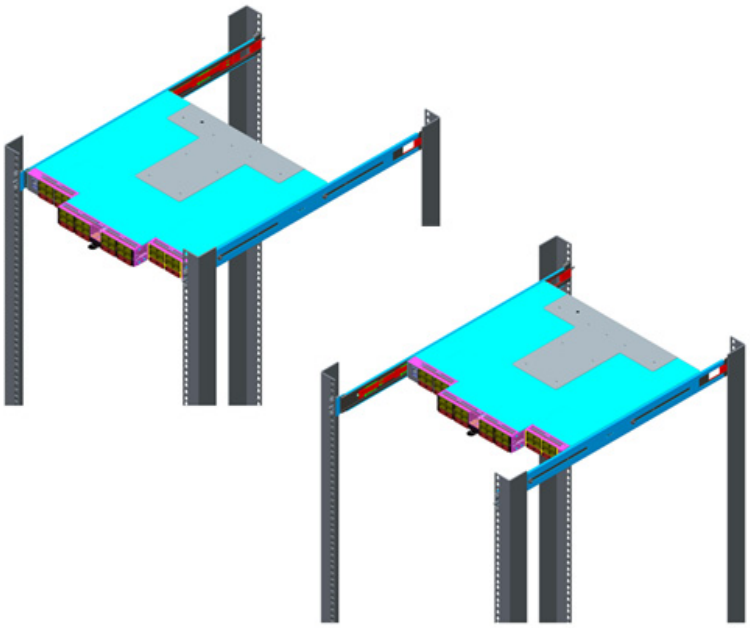

4. To change the depth of the switch, insert your fingers into the rail adjustment notches and pull away from the switch as shown in Figure 10. This disengages the rail latches from the switch hat section.

Figure 10. Rail Adjustment Notches

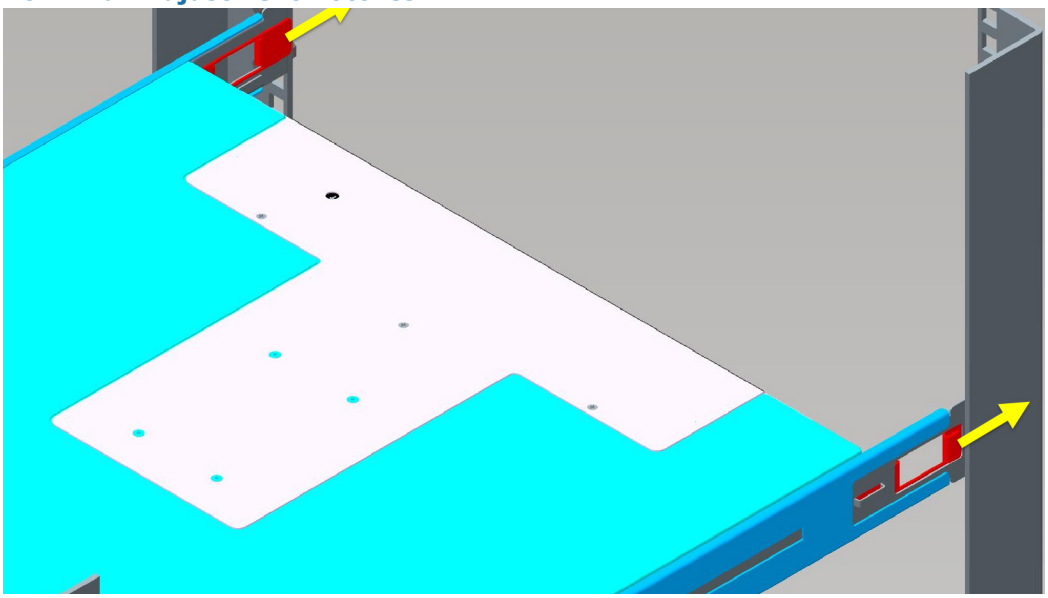

5. Slide the switch to the desired depth in the rack. The switch is adjustable in increments of 1 inch. When the switch is at the proper depth, push the rail adjustment notches back to their original position to secure in place.

2.3.3 Installing the Airflow Baffles

When necessary, the airflow baffles help control the flow of air on the top and bottom of the edge switch. The baffles are installed whenever the top and/or bottom of the edge is exposed to greater than 1U of space in a rack.

Figure 11. Edge Baffle (Top View)

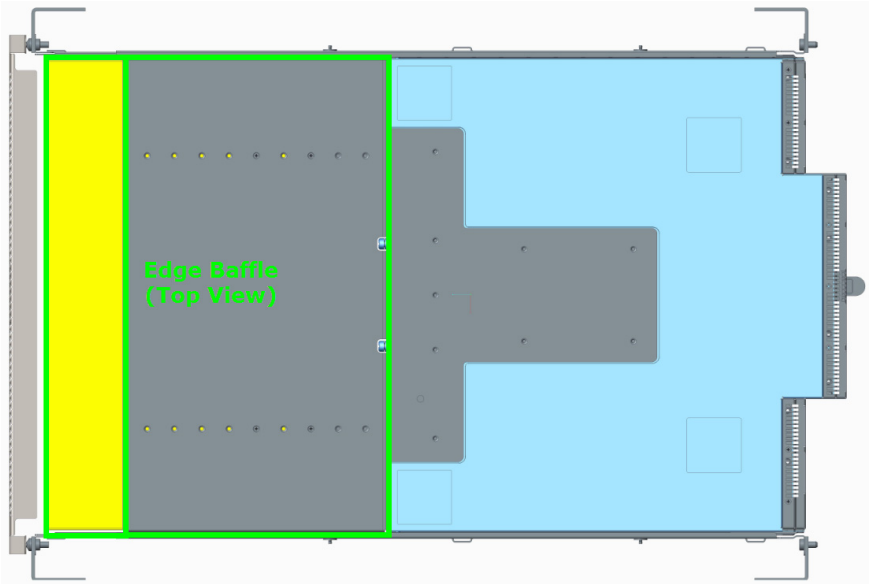

Note: Installation of the baffle(s) take place *after* the edge switch has been rack mounted.

1. Unlock the rail system by pulling the handles out.
2. Guide the baffle onto the rails, then slide the baffle into the rack until it stops against the edge switch.
   a. **Baffle Extension(s)**: Each baffle (i.e., top and bottom) has an extension (shown in yellow below). If not pre-configured, insert 4 screws (2 on each side) to secure the extension to the main baffle. The location of the screws depends upon the depth that the edge has been mounted.

Figure 12. Secure the Top Baffle to the Switch

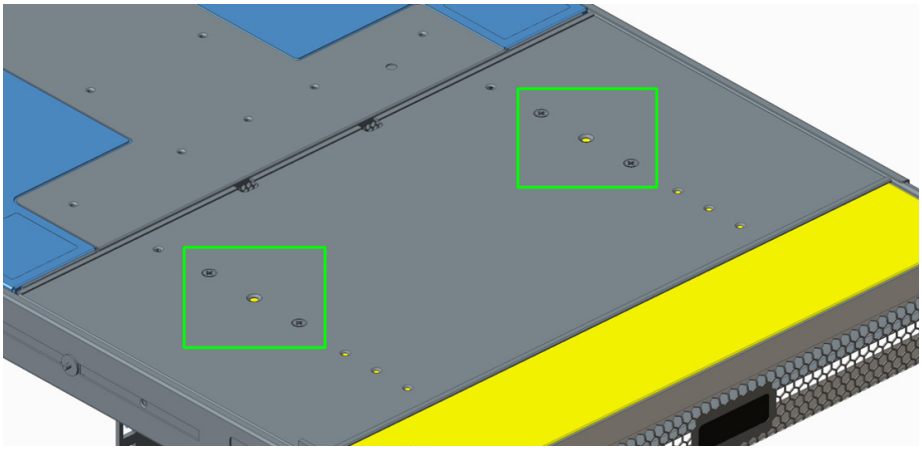

3. After baffle is fully inserted, push the handles back until the rail locks in place.

To vertically secure the baffles, insert the baffle clamp (one on each side) as shown:

1. Unscrew the end of the rail post.

Figure 13. Remove Rail Post

2. Slide the clamp into place on the top and bottom baffles.

Figure 14. Insert Clamp on Baffles

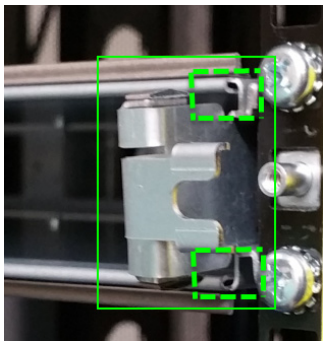

3. Push the clamp into place over the rail post.

Figure 15. Clamp over Rail Post

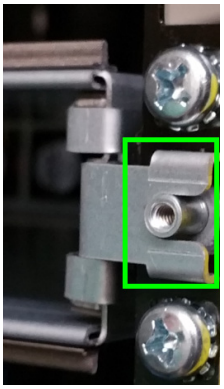

4. Reattach the rail post, which locks the clamp into place.

Figure 16. Reattach the Rail Post

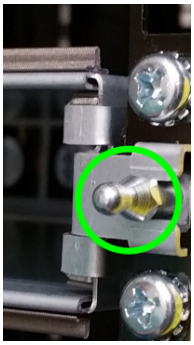

2.3.4 Installing the Switch Fascia

The Edge switch fascia guards against ESD as well as accidental contact with the fans and power supplies.

Figure 17. Switch Fascia

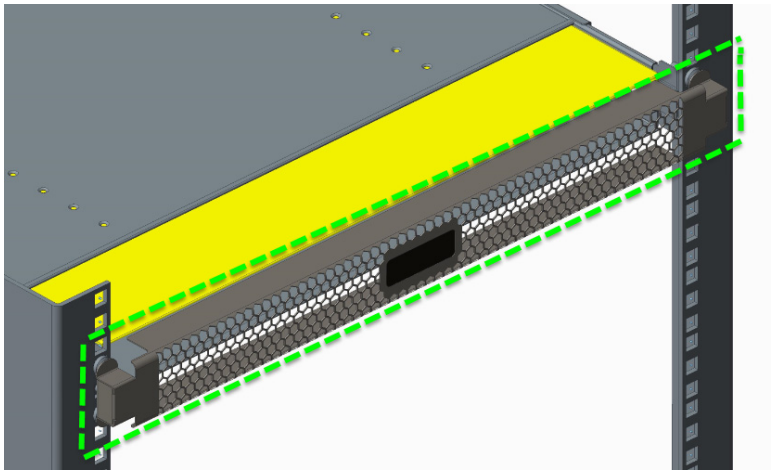

The fascia is installed by snapping it in place onto the switch rail posts.

Figure 18. Rail Posts for Fascia Installation

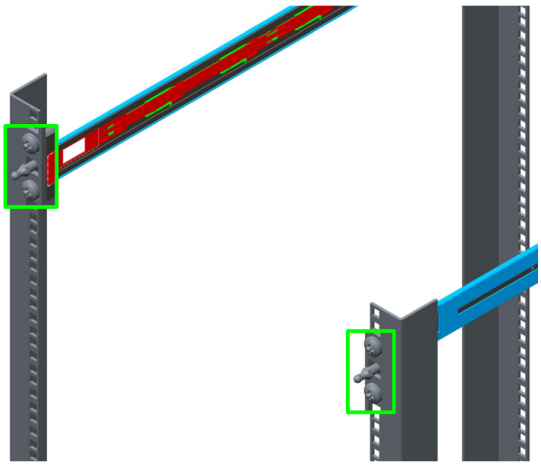

2.3.5 Reversing the Fan Airflow

This section details the procedure to reverse the airflow on the switch fan assembly from the default port-side exhaust position.

2.3.5.1 Tools Required:

- ESD wrist strap
- #0 Phillips screwdriver

2.3.5.2 Procedures

Note: Before removing the cover from the switch, first disconnect the power cord(s).

1. Loosen the 4 thumbscrews from the switch cover. There are 3 screws on the top, and 5 screws on the back. Lift the cover on a 45-degree angle, then pull to remove.

Figure 19. Switch Cover Thumbscrews (Top View)

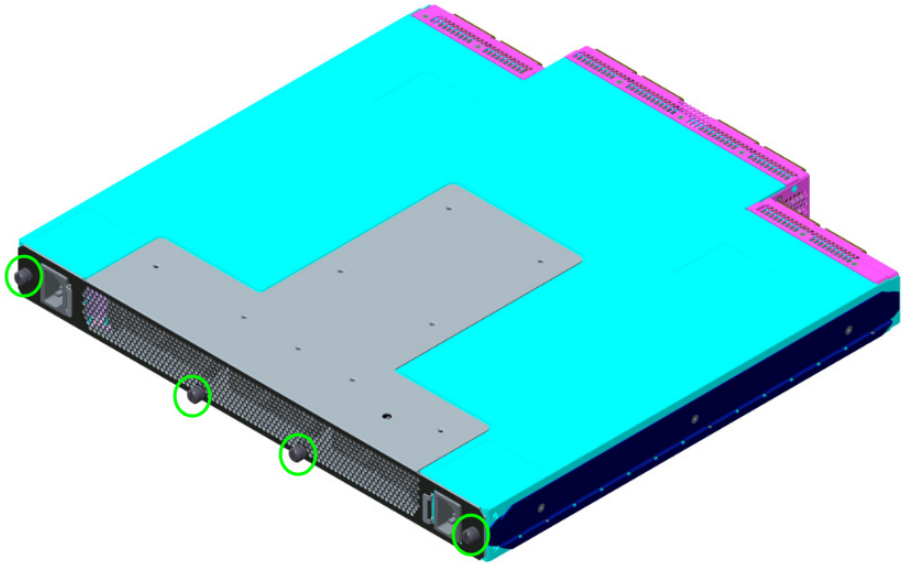

2. Holding the fan assembly on the sides lift straight up and rotate the fan assembly 180 degrees as shown in Figure 20.

Figure 20. Fan Assembly Rotation

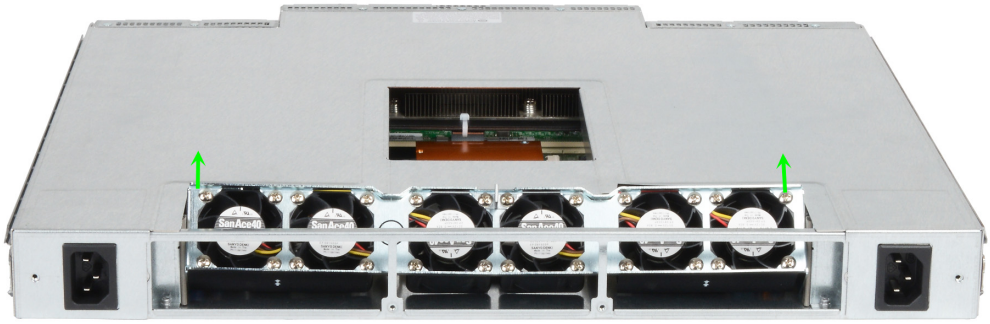

3. Lower the fan assembly straight down. The airflow direction indicators should now face towards the rear of the chassis as shown in Figure 21.

Note: Make certain to provide strain relief for the wire assembly.

Figure 21. Wire Assembly Strain Relief and Airflow Direction Indicators

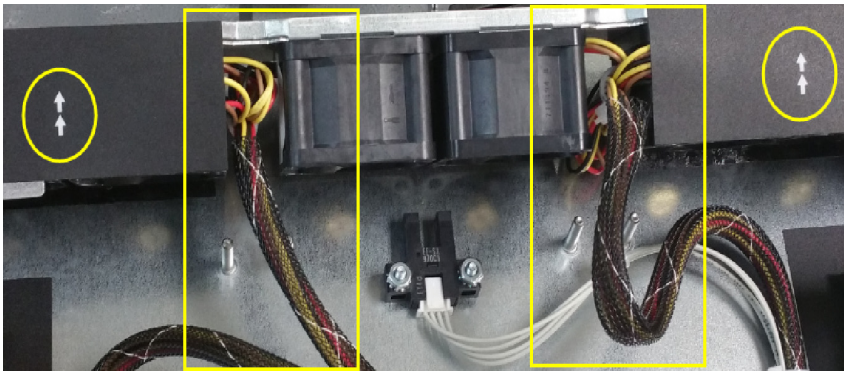

4. Reattach the switch cover.

2.3.6 Installing the Q7 Management Module

This section details the procedure to install the Q7 Management Module into an existing unmanaged edge switch.

Figure 22. Q7 Management Module

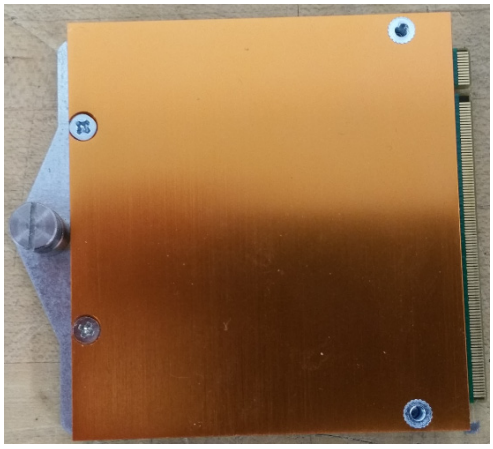

2.3.6.1 Tools Required:

- ESD wrist strap
- #0 Phillips screwdriver
- Regular screwdriver

2.3.6.2 Procedures

1. Remove the switch cover as detailed in Section 2.3.5.2, Step 1. The Management Module slot is displayed in Figure 23.

Figure 23. Management Module Slot

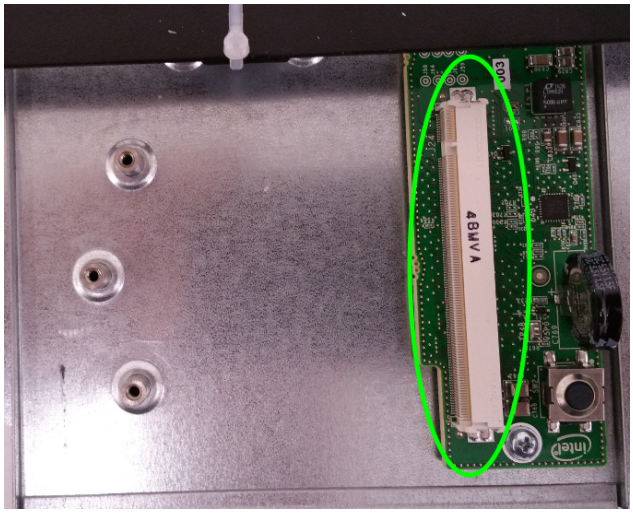

2. Holding the module at approximately a 45-degree angle, slide the connector into module slot. Make certain to line up the notch on the module and the connector (see Figure 24).

Figure 24. Installing the Q7 Module

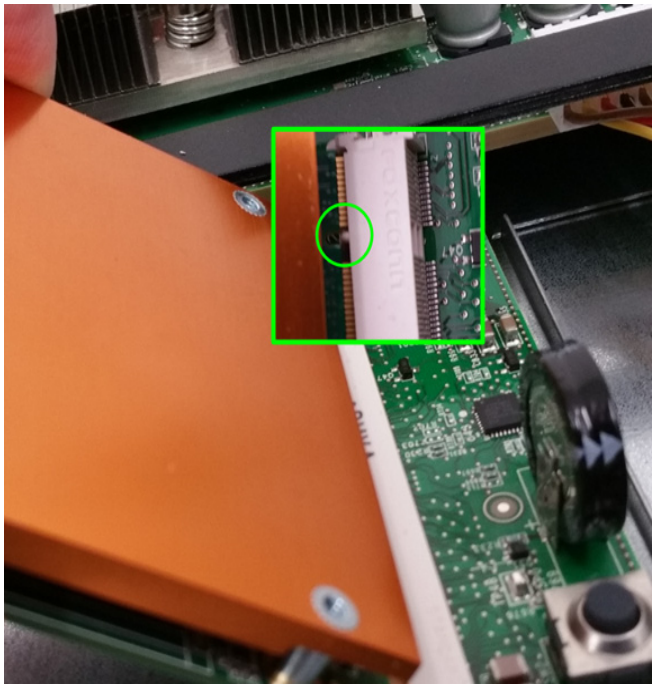

3. Once the module is seated properly in the connector, secure screw to the chassis using a regular screwdriver.

Figure 25. Q7 Module Mounting Screw

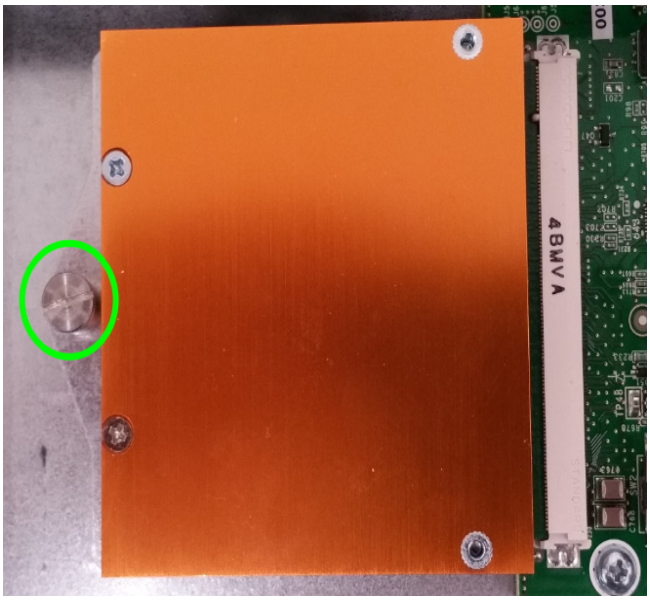

4. Reattach the switch cover.

2.4 Omni-Path Director Class Switches 100 Series Installation

2.4.1 Mounting Hardware Kit Contents:

- **Mounting Kit** containing:
  - Support Platform (1)
  - Plenums (2)
  - #10 Mounting screws
  - #10 Mounting nuts
  - M6 Mounting Screws

2.4.2 Unpacking the Switch

Note: Set aside packaging materials in the event that the switch requires return shipment.

The following images and descriptions give a high-level overview for unpacking a Director Switch (24 slot model in this example).

Figure 26. Unpacking the Switch (1)

1. Remove the banding.

Figure 27. Unpacking the Switch (2)

2. Remove the lid.

Figure 28. Unpacking the Switch (3)

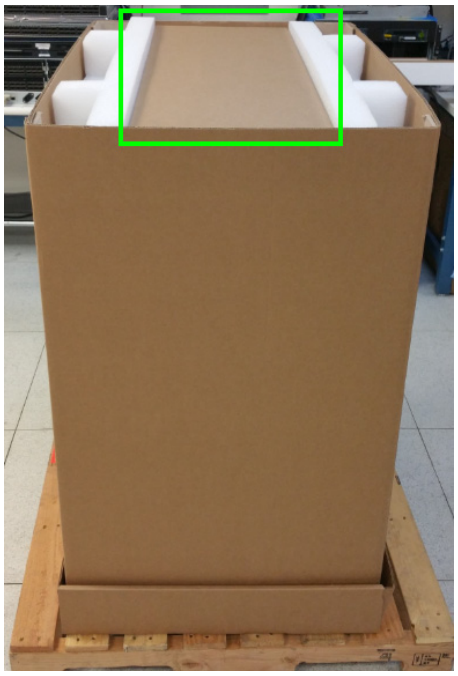

3. Remove the accessory kit box and white packing form. The accessory kit contains required hardware, power cables, documentation, etc.

Figure 29. Unpacking the Switch (4): Accessory Kit

Figure 30. Unpacking the Switch (5)

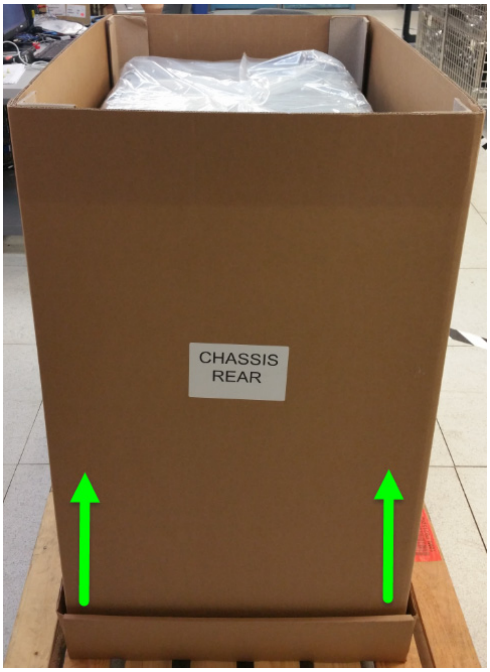

4. Lift the box up out of the base.

Figure 31. Unpacking the Switch (6)

5. Remove the plenum boxes.

Figure 32. Unpacking the Switch (7)

6. Remove the plastic bag, then remove the support shelf from the top of the switch.

2.4.3 Installation Tasks

The following section details rack mounting instructions for the 6-slot and 24-slot Intel® Omni-Path Director Class Switch 100 Series. The installations are very similar; the majority of steps apply to both switches. Where applicable, any specifics for either the 6-slot or 24-slot Director are called out.

2.4.3.1 Install the Support Platform

1. Measure the inside distance between the front and middle rails on the cabinet (27” in the Figure 33 example).

Figure 33. Measure the Rack

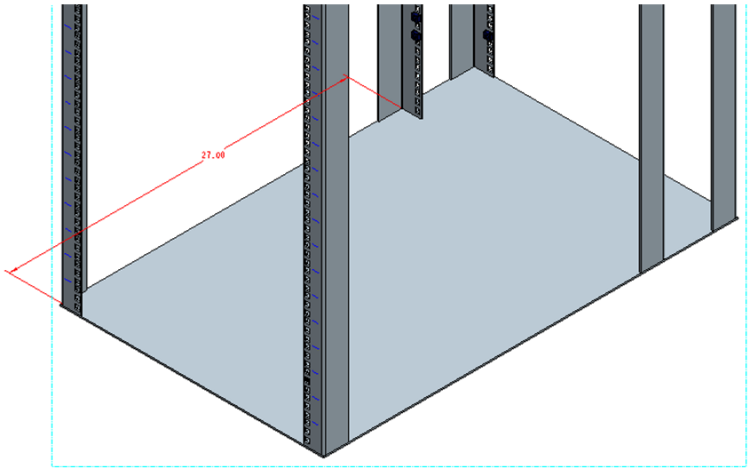

2. Before installing into the cabinet, preset the adjustable rails on the plenum base, leaving the screws loose to the dimension measured on the cabinet (27” in this example). In order to be able to fit the plenum base into the cabinet, set the rails to slightly less than the measured size (i.e., < 27”). See Figure 34.

Figure 34. Preset the Adjustable Rails

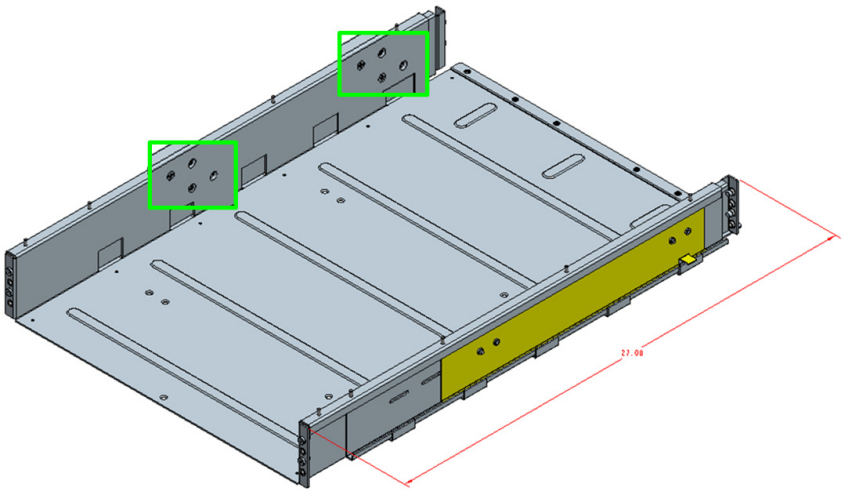

3. Install the fixture brackets to the cabinet at the desired height (Figure 35). The brackets support and help locate the installation of the plenum base. Remove and discard/recycle the brackets after plenum base has been installed.

Figure 35. Install Fixture Brackets

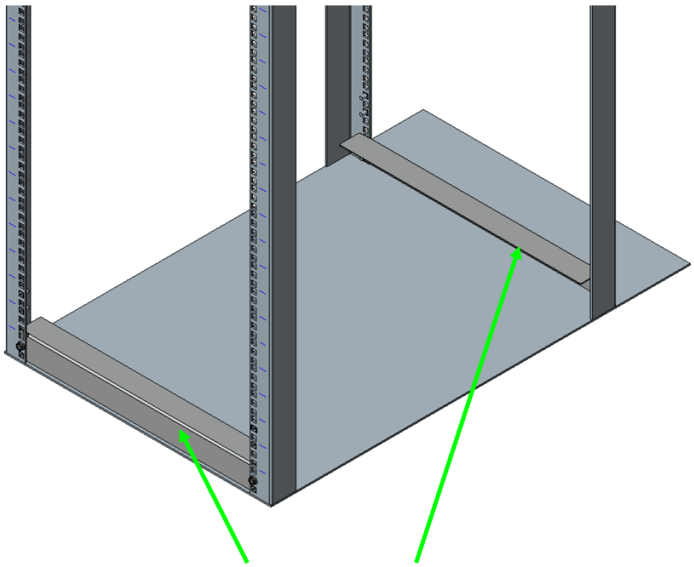

4. Secure the platform to the rack using M6 mounting screws, 3 per platform rail (1 in the front and 2 in the back) as displayed in Figure 36. Torque screws to 30in-lb.

Figure 36. Secure Platform to Rack

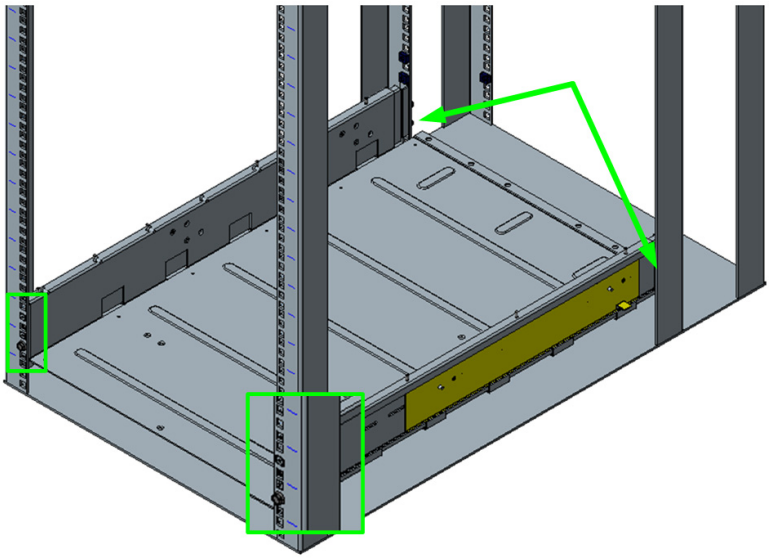

5. Attach the plenums to the top of each platform rail using 10 mounting nuts, 5 per platform rail as displayed in Figure 37. Torque nuts to 30in-lb.

Note: Make certain to tighten the adjustable rail screws (from Step 2) at this time.

Figure 37. Secure the Plenums to Top of Platform Rails

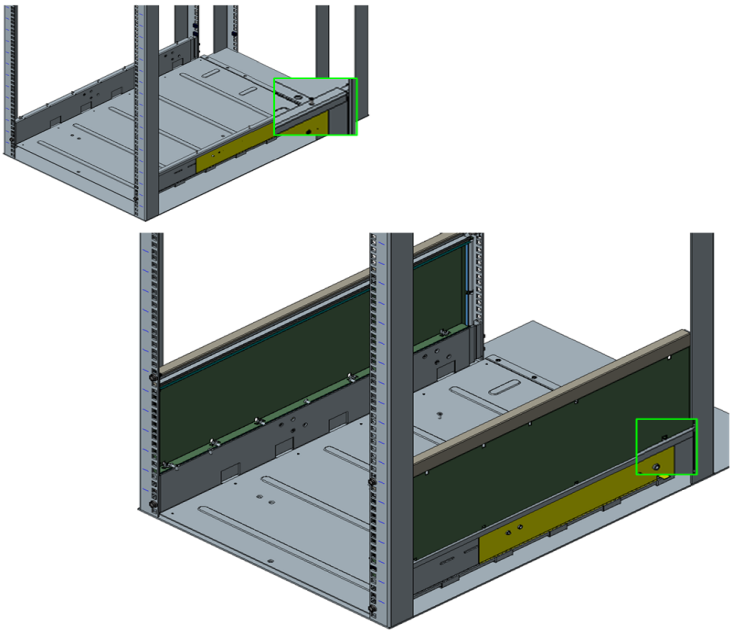

6. Secure the top of the plenums to the rack rail as displayed in Figure 38:
   a. 6 Slot Chassis: use 2 mounting nuts, 1 per rail.
   b. 24 Slot Chassis: use the lower of the 2 openings, 1 mounting nut per rail.

Figure 38. Secure the Top of the Baffles to the Rack Rails

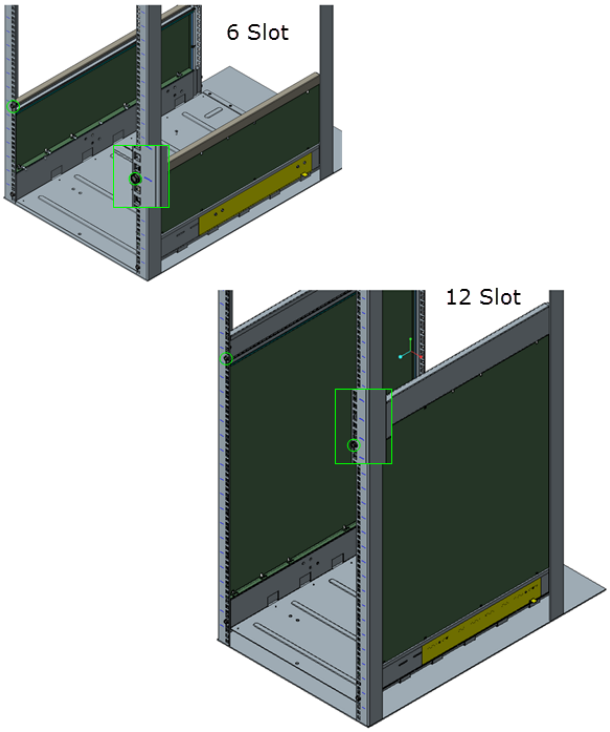

7. The completed Platform assemblies for both the 6 and 24 slot switches are displayed in Figure 39.

Figure 39. Completed Platform Assemblies

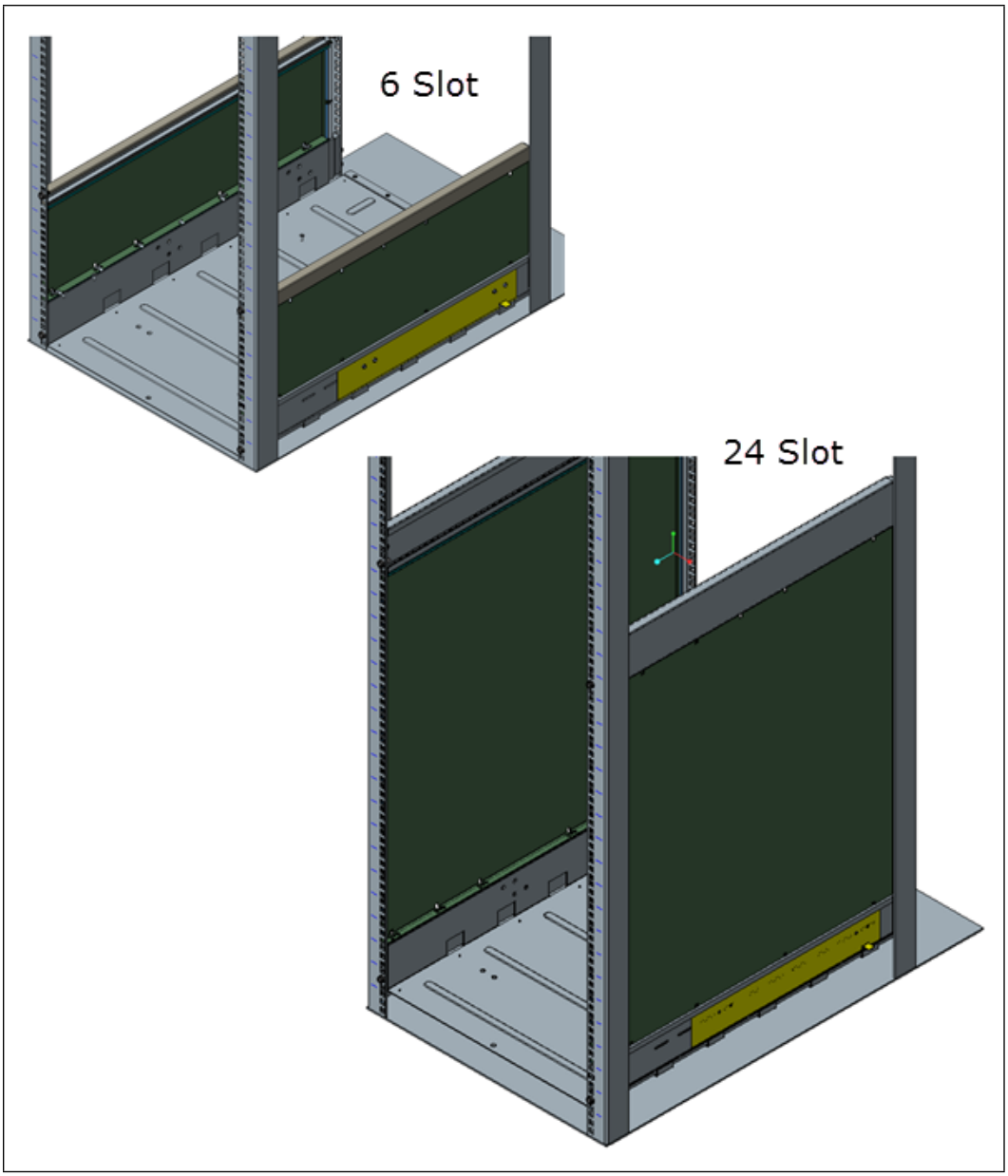

2.4.3.2 Installing the Director Switch Chassis

Warning: To avoid injury, do not lift a fully-loaded Director class switch manually. *Use a mechanized lift only*.

1. Align the chassis with the rack.
2. Using a pallet jack, raise the unit until the bottom of the chassis is at (*or slightly higher than*) the surface of the support shelf installed in Steps 1 through 6. Lock the pallet jack wheels.
3. Use a group of people to push the chassis from the front to slide it off the pallet and on the support shelf. The chassis should be inserted into the rack until the rear of the chassis base is against the rear support bracket.

Note: If you are installing the cable management guides (see "Installing the Optional Cable Management Guide" on page 51), install the cage nuts into the rack rails before fully sliding the chassis into the rack.

Figure 40. Slide the Chassis into the Rack

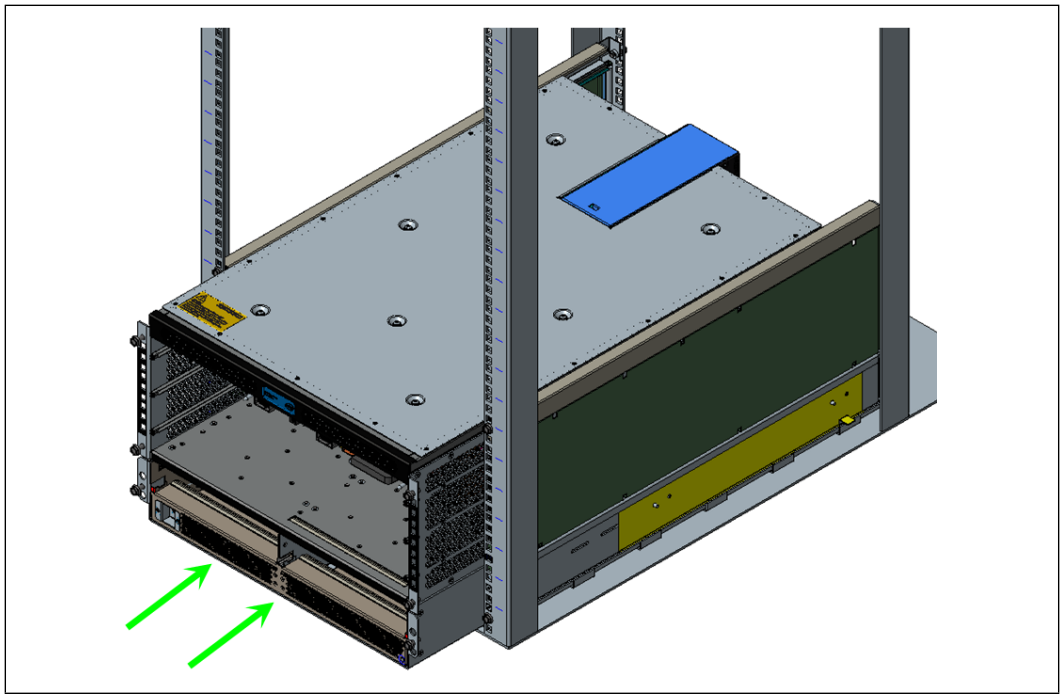

4. Fasten the chassis to the rack with M6 screws:
   a. 6-Slot Director: six (6).
   b. 24-Slot Director: twelve (12).

Figure 41. Fasten the Chassis to the Rack

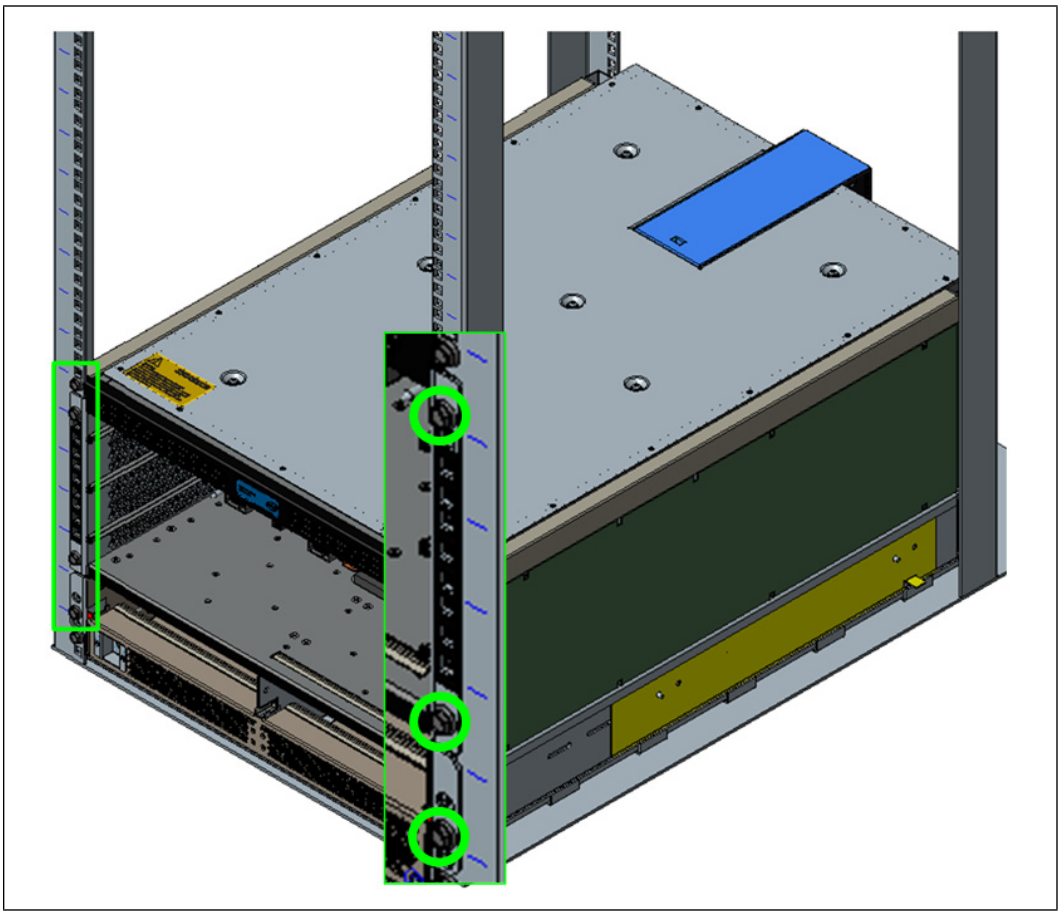

5. The completed switch installations for both the 6 and 24-slot switches are displayed in Figure 42.

Figure 42. Completed Switch Installations

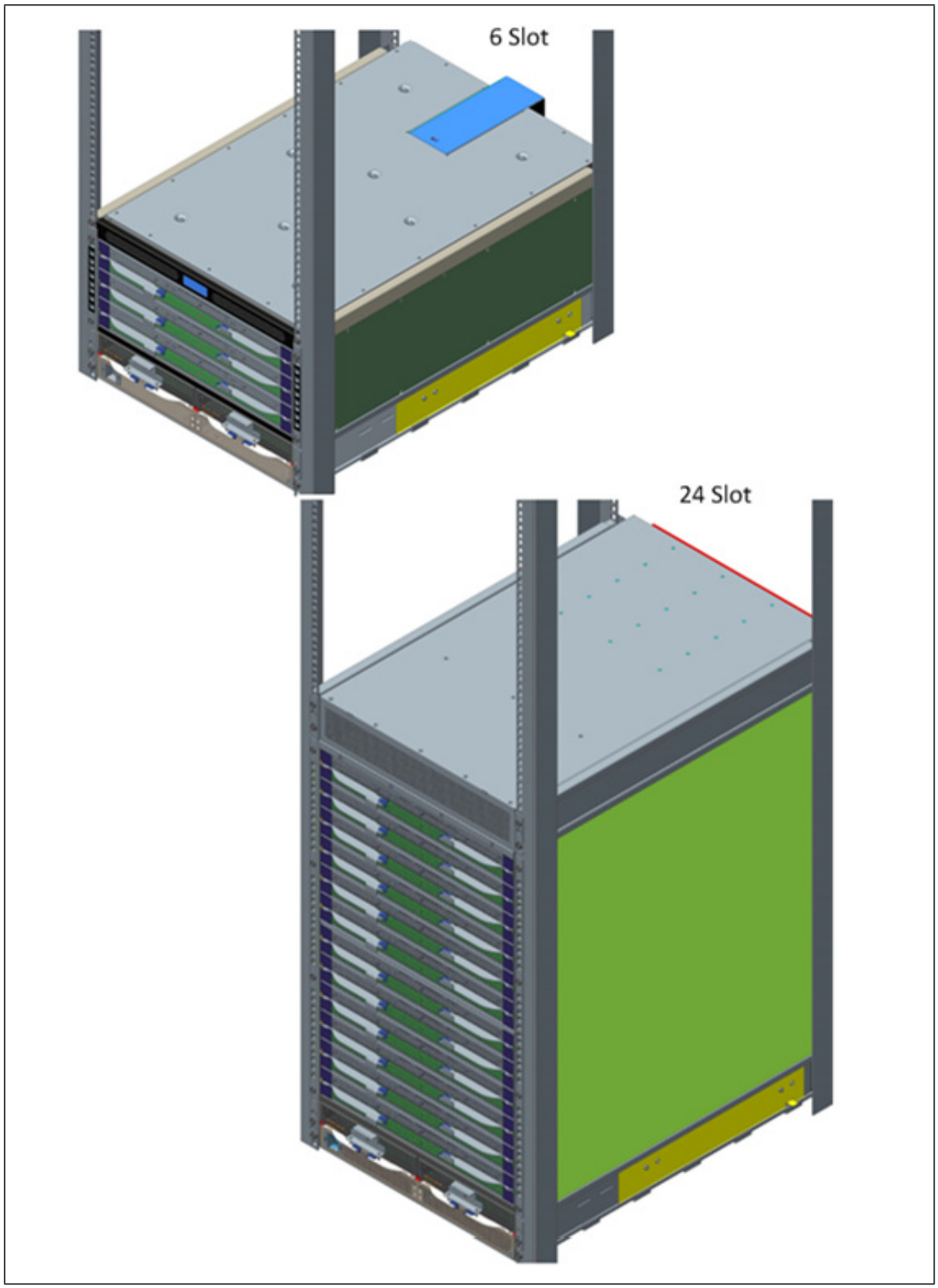

2.4.4 Installing the Optional Cable Management Guide

The optional Cable Management Guides are attached to the rack rails with M6 cage nuts and screws as shown in Figure 43.

Figure 43. Installing Cable Management

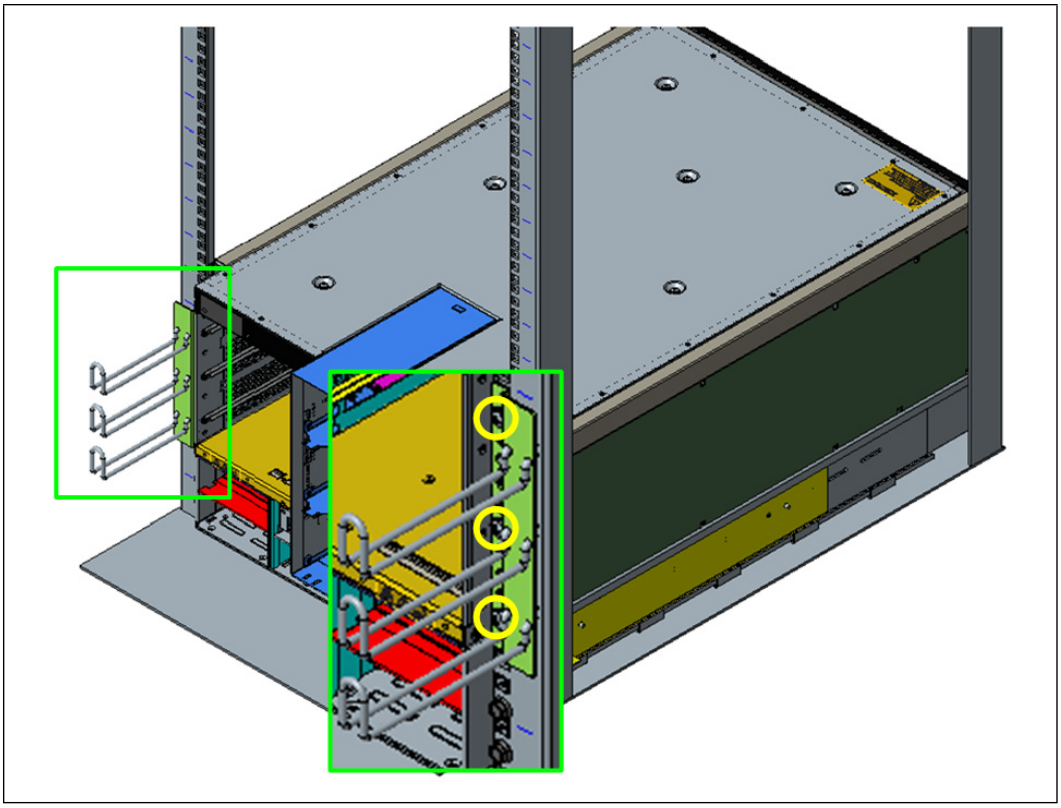

2.4.5 Installing Director Class Modules

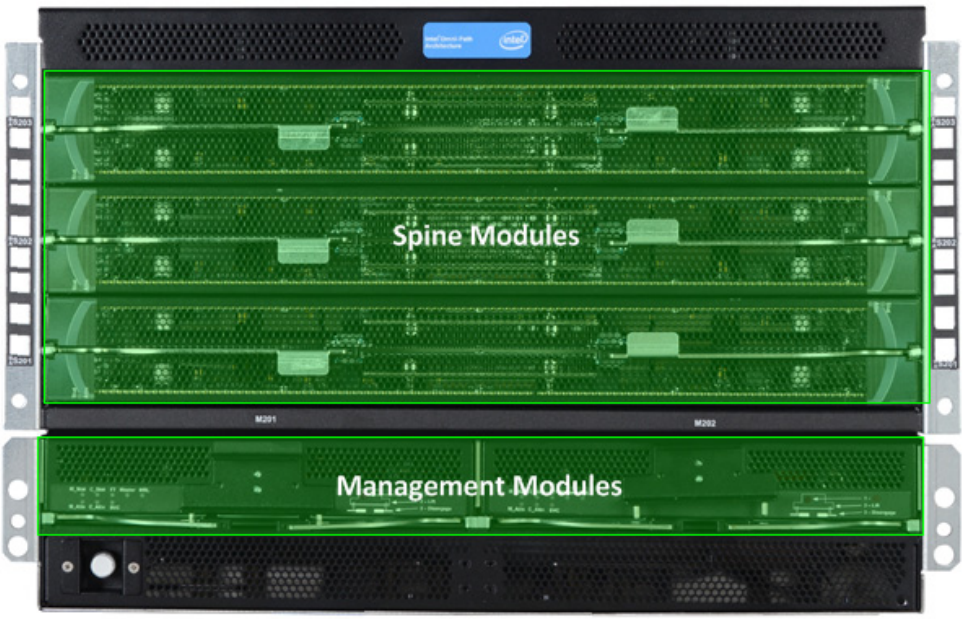

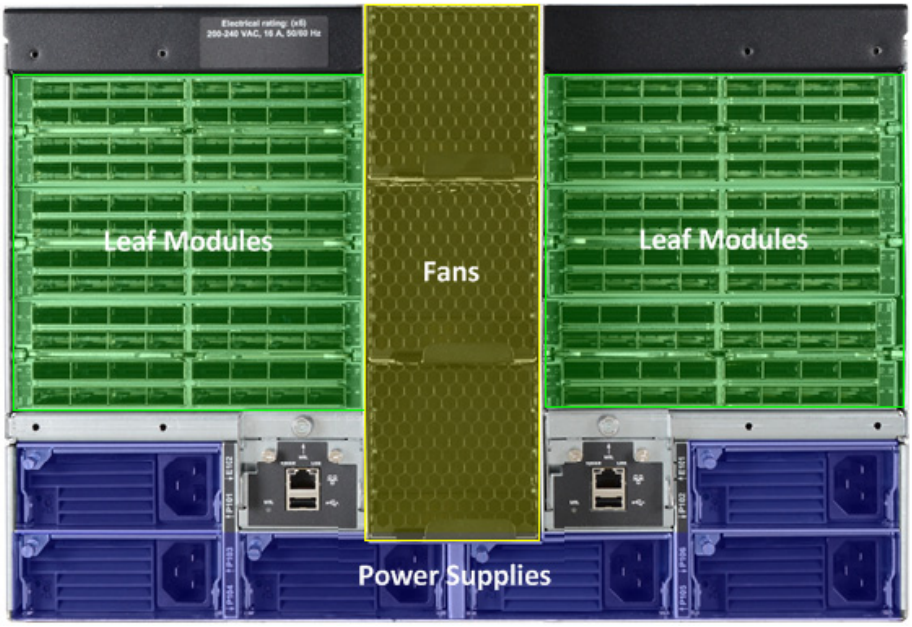

2.4.5.1 Spine, Leaf and Management Modules

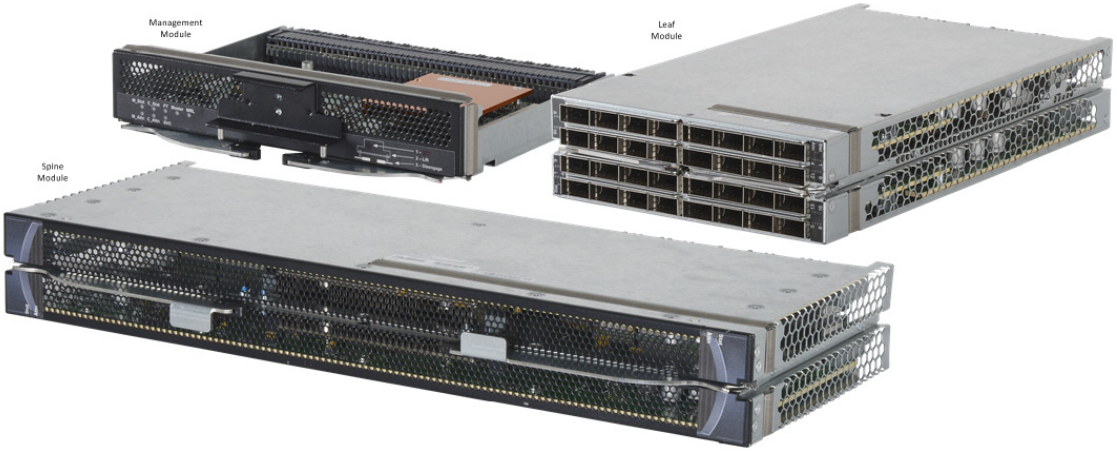

These modules all have release arms that function in a similar way during installation.

The Management Module (MM) is used here as the example.

1. Grasp and pull the release arms out and away from the module body as shown in Figure 44.

Figure 44. Module Installation 1

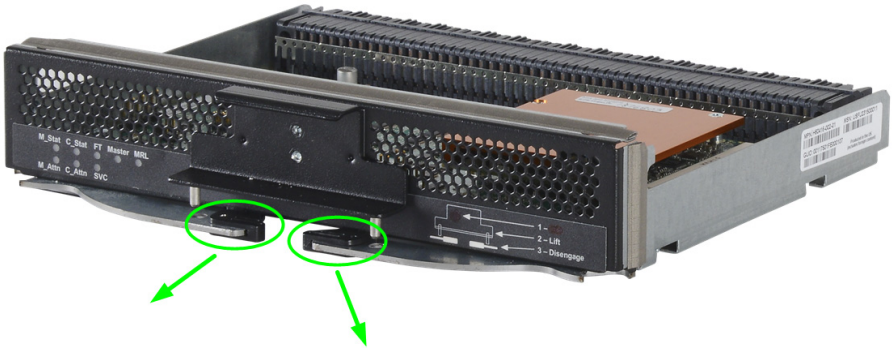

Figure 45. Module Installation 2

2. Slide the module straight into an applicable open slot until it engages with the backplane connector.

Caution: Never push on the release arms when sliding the modules into the applicable slots. Always apply pressure to the middle of the module as shown in Figure 46.

Figure 46. Module Installation 3

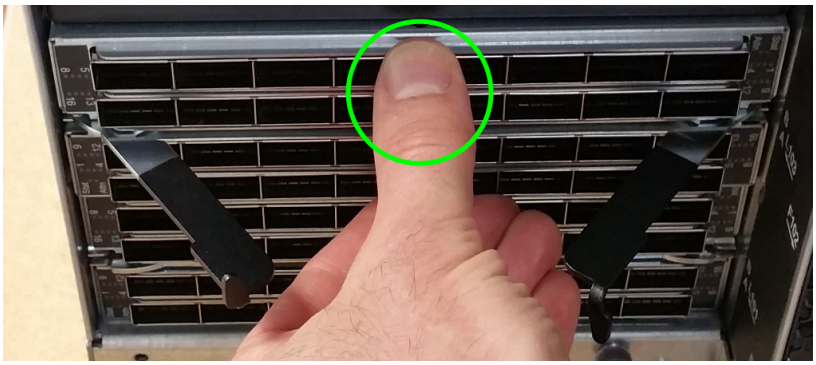

3. Push the release arms in until they lock in place.
4. ***Management Module only***: Lower the MRL latch into the holes of the release arms. Do the allows the MM to communicate with the SEEB module on the other side of chassis as shown in Figure 47.

Figure 47. Module Installation 4

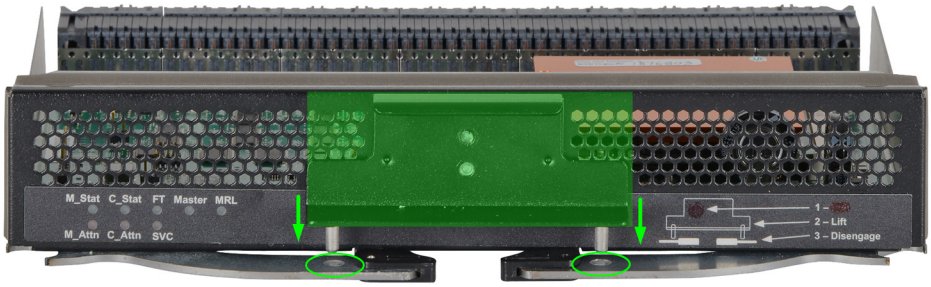

5. ***Chassis management slot leaf only***: If the leaf module is in one of the chassis management slots (i.e., L101 or L102) the mechanical release latch (MRL) must be moved in order to install the leaf. To move the MRL, loosen the thumbscrew attached to the Serial, Ethernet, Chassis EEPROM Board (SEEB) module, then pull down to release the MRL as shown in Figure 48. This allows enough clearance for leaf module to be installed.

Figure 48. Module Installation 5

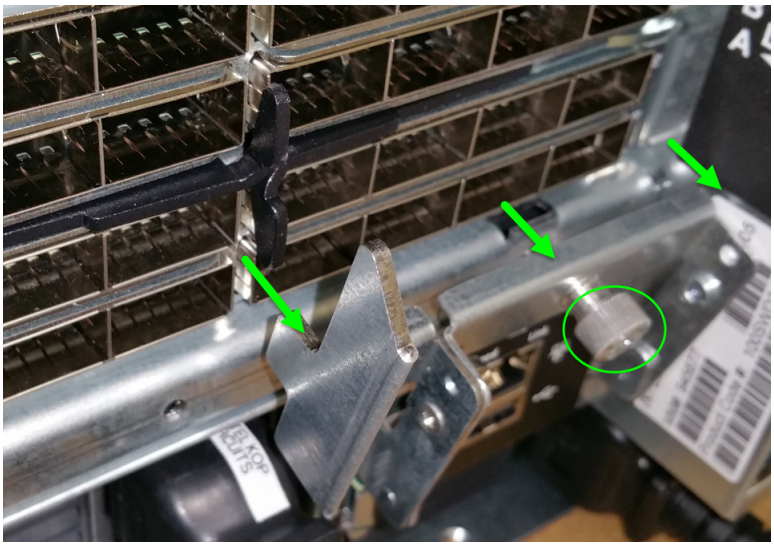

2.4.5.2 Fans

1. Slide the fan module straight into an applicable open slot until it engages with the backplane connector.

2.4.5.3 Power Supplies

1. Loosen the thumbscrew until it disengages from the power supply unit.
2. Pull the handle down.
3. Slide the module straight into an applicable open slot until it engages with the backplane connector.
4. Push the handle back up and reconnect the thumbscrew.

2.5 Connect Equipment to the Ports and Power On the System

Note: Before connecting equipment, it is important to understand the locations of the serial and Ethernet ports on the Omni-Path Fabric series switches. For the edge switch, these are located on the switch port side.

Figure 49. Edge Switch Serial and Ethernet Ports

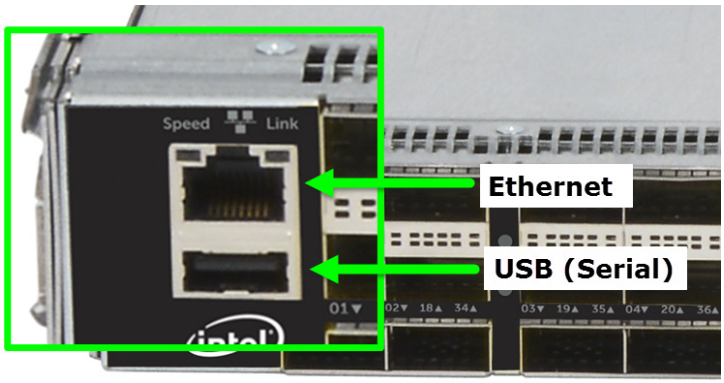

Figure 50. Director Switch Serial and Ethernet Ports

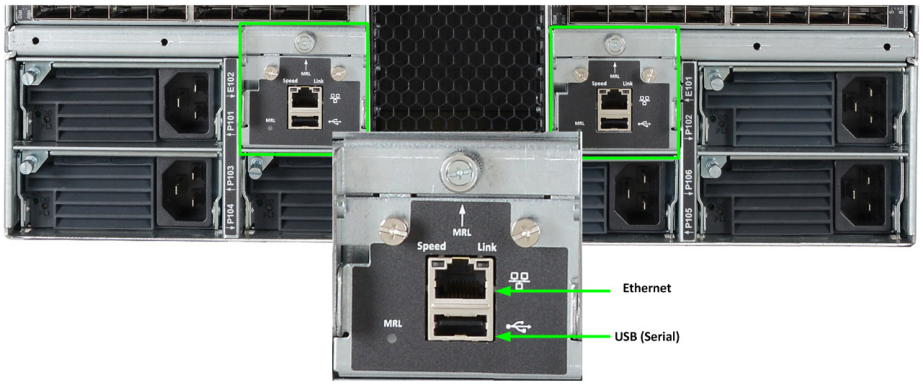

1. Connect a Category 5 or 6 (Cat 5/6) Ethernet cable to the RJ-45 connector(s) on the switch. Connect the other end of the Cat 5/6 to an OOB LAN workstation, another switch or a hub.
2. Connect the switch to host(s)/switch(es) using QSFP cables.

Caution: It is important to provide strain relief for the cable connector.

2.5.1 Director Class Switch Port and Slot Numbering

The graphic below details the leaf slot numbering schema for each Director switches.

Note: Leaf slots 101 and 102 are referred to "Management" slots, meaning a leaf module must be present whenever a management module is installed in the corresponding slot on the front of the chassis.

Figure 51. Director Class Leaf Slot Numbering

2.5.2 Leaf Module Port Numbering

The physical module contains two 16-port leafs-A and B-stacked on top of each other. The physical port numbering is shown below.

Figure 52. Leaf Module Port Numbering

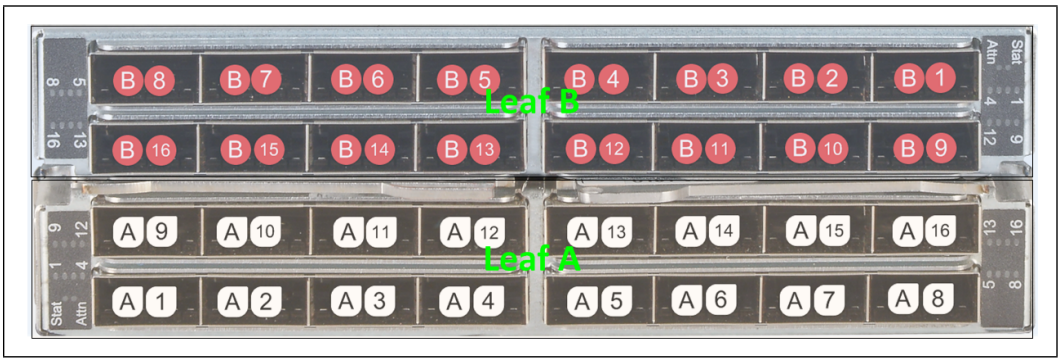

2.5.2.1 Chassis Viewer GUI Leaf Port Stats Screen

The Port Name column schema is a follows:

- **Lxxx** = Chassis leaf module slot (i.e. L101 - L124 for the 24-slot Director)
- **A/B** = Leaf A or B
- **Pxx** = Physical port number (i.e., 01 - 16)

Figure 53. Chassis Viewer GUI Leaf Port Stats Screen

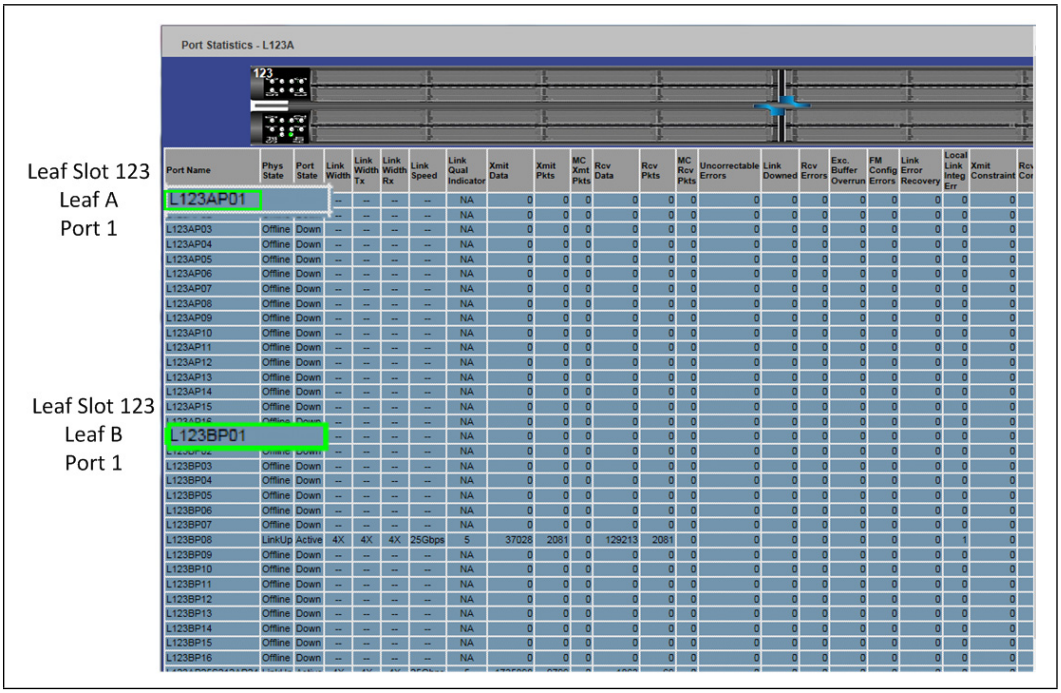

2.5.3 Edge Switch Cabling Recommendations

To minimize complexity, the following figure details cabling recommendations for the 48-port edge switch:

Figure 54. 48 Port Edge Switch Cabling Recommendations

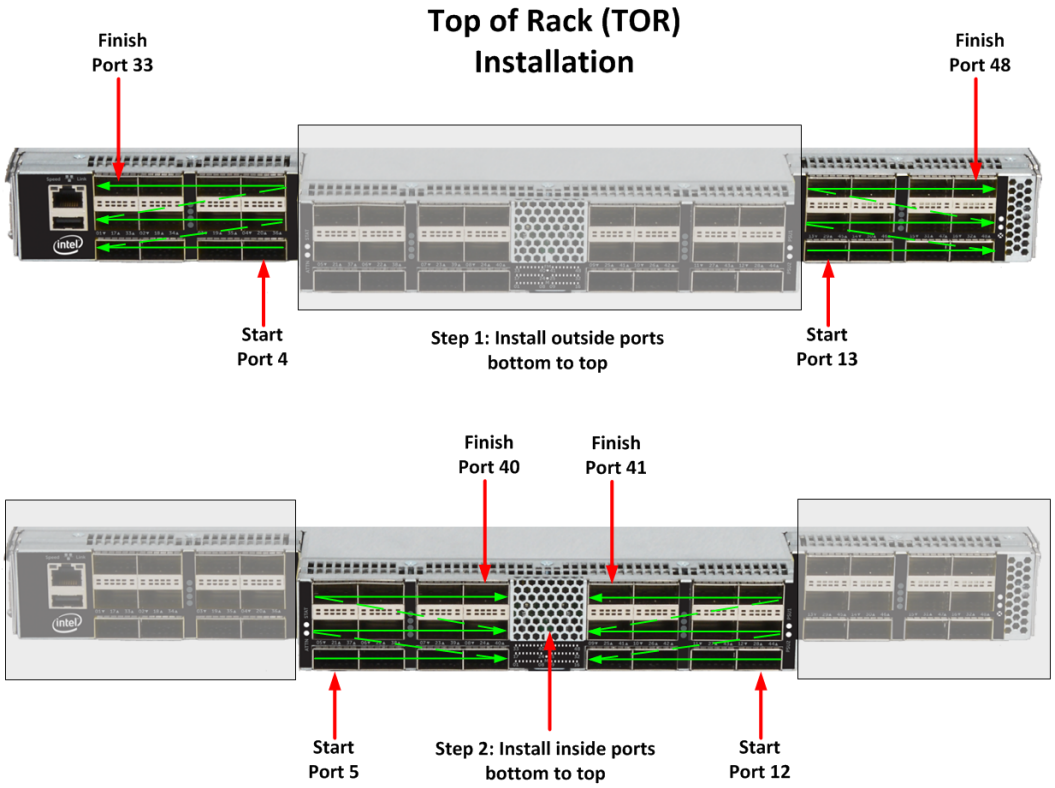

2.5.3.1 Connecting Power

Note: For each power supply installed, a power cord must be installed in corresponding power inlet.

1. Provide strain relief for the power cable(s).
2. If necessary, replace the closeout over the switch fan side.
3. Connect the power cables to a power distribution unit (PDU) or a proper AC power outlet.
4. When the switch is plugged into an AC power outlet:
   a. The system powers up.
   b. The fans start.
   c. The system performs a power-on self test.

Note: For the Director switches, make certain the DC ON/OFF switch is illuminated. If it is not, press the button to supply power. The switch is located in the lower left corner on the chassis spine side>

5. The switch, power supply(s), and fan LEDs light up.

2.6 Setting Up the USB Console

1. Download the driver file **CDM v2.12.00 WHQL Certified.exe** from http://www.ftdichip.com/Drivers/VCP.htm.
2. Open the FTDI Drivers Folder and Right click on the **CDMv2.12 driver** file and select **Run As Administrator** to install the necessary driver to access the USB serial console of the switch.
3. Open Putty, under Category, select Serial and enter the following parameters:
   - Serial Line to connect to: <Enter COM>
   - Speed: 115200
   - Data Bits: 8
   - Stop Bits: 1
   - Parity: None
   - Flow Control: None

2.7 Bringing Up the System For the First Time

2.7.1 Start-up Procedures

1. Power up the switch.
2. From its flash image on the management module, the switch begins its boot process.
3. Verify the IP address with the CLI command `showChassisIpAddr` command. The system returns information similar to the following:

   ```
   Chassis IP Address: 192.168.100.9 Net mask: 255.255.252.0
   ```

2.7.2 Changing the Switch IP Address and Default Gateway through the CLI

The CLI can be accessed two ways:

- using the switch serial port:
  - Edge switch (with optional management module): connects through the USB serial port
  - Director series: connects through the USB port on the SEEB modules
- through Ethernet, using Telnet or SSH

Note: If using a serial port on a Director switch, make certain to connect to the SEEB serial port associated with the Management Module (MM) on the opposite side of the chassis.

2.7.2.1 Using the Serial Connection

1. When a serial port connection is established, the user will see a prompt. To change the chassis IP address type:

   ```
   setChassisIpAddr -h <ipaddress> -m <netMask>
   ```

   where `-h <ipaddress>` is the new IP address in dotted decimal format (that is, `xxx.xxx.xxx.xxx`), and `-m <netMask>` is the new subnet mask in dotted decimal format.
2. To change the switch default gateway IP address type:

   ```
   setDefaultRoute -h <ipaddress>
   ```

where `-h <ipaddress>` is the new default gateway IP address in dotted decimal format.

3. The changes are effective immediately.

2.7.2.2 Using Ethernet

1. Access the switch with one of the following commands using the default IP address:

   `Telnet: telnet 192.168.100.9`

   `SSH: ssh 192.168.100.9`

2. The system prompts for a user name. In order to change the IP address and default gateway, the user must be logged in as the administrator. At the prompt type `admin` and press ENTER.
3. The system prompts for a password. At the prompt type `adminpass` and press ENTER. The system responds with:

   `Welcome to the <SWITCH> CLI. Type 'list' for the list of commands.`

4. To change the switch IP address type:

   `setChassisIpAddr -h <ipaddress> -m <netMask>`

   where `-h <ipaddress>` is the new IP address in dotted decimal format (that is, `xxx.xxx.xxx.xxx`), and `-m <netMask>` is the new subnet mask in dotted decimal format.

5. To change the switch default gateway IP address type:

   `setDefaultRoute -h <ipaddress>`

   where `-h <ipaddress>` is the new default gateway IP address in dotted decimal format.

6. The changes are effective immediately.

2.7.3 Updating the Management Module IP Addresses in a Director Class Redundant Management Configuration

Each management module must have a unique IP address that is different than the chassis IP address of the switch. A redundantly-managed switch will have multiple, unique IP addresses.The default IP addresses are:

- Chassis: 192.168.100.9
- Management Module(s): 192.168.100.10

It is necessary for each management module to have a unique IP address for the following reasons:

- Unique IP addresses are used when sending syslog messages from a management module to a syslog server.
- Gives the user the ability to ping each management module separately.
- If the IP addresses are not unique, collisions occur, causing IP operations to fail.

Note: All management modules (MM) are individually tested and configured with the default IP address of 192.168.100.10. In order to avoid an address conflict, be certain to change the default IP address of each MM after inserting it into the chassis.

To update the IP address on a management module, do the following:

1. Insert the MM into chassis.
2. Connect the MM via USB to a serial console software (e.g., Putty or Teraterm).

3. Reset/apply power to the MM.
4. When the system displays `image1` or `image2`, press the SPACEBAR to interrupt the auto load sequence before the counter expires (within 5 seconds).
5. Enter **`c`** and press ENTER until **`inet on Ethernet (e) :`** is displayed.
6. Enter the new IP address (each MM must have a unique IP address).
7. Press ENTER until you return to the boot prompt.
8. Enter **p** to view and verify the new IP address.
9. Enter **@** to boot the MM.

2.8 Component LEDs

2.8.1 Edge Switch

Figure 55. Edge Switch LEDs

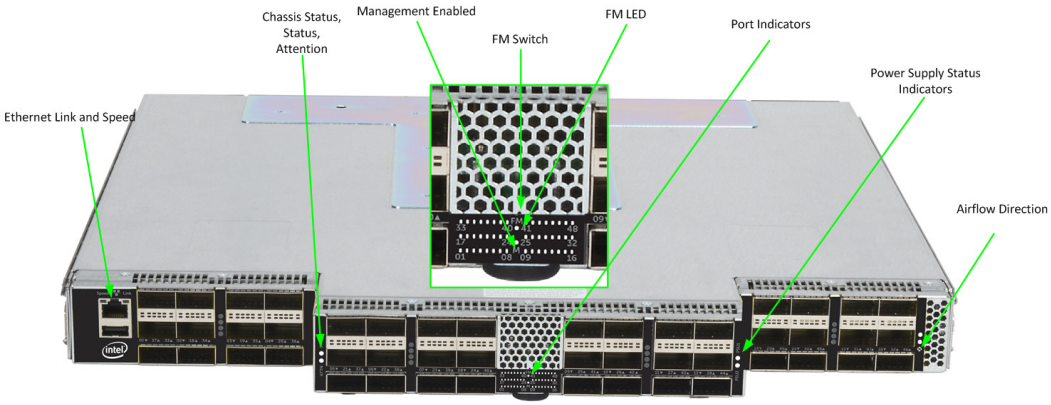

2.8.1.1 RJ45 LEDs

The RJ45 connectors have two LEDs, **Link** and **Speed**. The **Speed** LED is **Green** when a 100Mbps link is connected. The **Link** LED is **Amber** when an Ethernet link has been established, and blinking when the link is active.

2.8.1.2 Chassis Status LEDs

2.8.1.2.1 Status (STAT)

The status LED indicates one of the following conditions:

- **Steady Green**: the module is operating normally.
- **Blinking Green**: LED test state.
- **Off**: module is in the removable state.

2.8.1.2.2 Attention (ATTN)

The Attention LED indicates one of the following conditions:

- **Off**: the system functioning normally.
- **Steady Amber**: the system requires some attention, which could indicate one of the following conditions:
  - The switch temperature is at a warning level on the module.
  - The switch silicon temperature is at a warning level (approximately 90 degrees C).
  - DC voltages on the board are slightly out of tolerance (12V Bulk, 5V, 3.3V and 1.8V are all monitored).
  - The module can no longer function properly. The system will take the appropriate actions to ensure that no damage is done to its components.
- **Blinking Amber** (once every four seconds): LED test state.

2.8.1.3 Ports, Fabric Manager (FM), Managed (M), and FM Switch

Figure 56. Ports, Fabric Manager (FM), Managed (M), and FM Switch LEDs

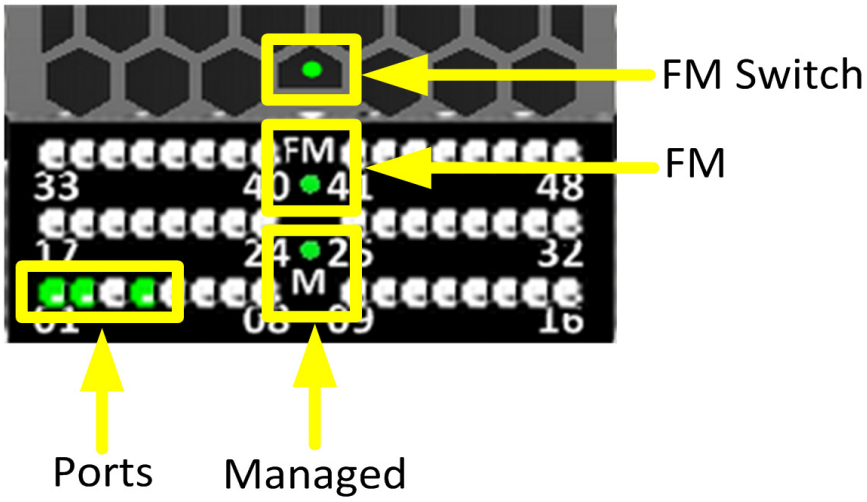

2.8.1.3.1 Ports

Each switch cable port has a **Green** link status LED that provide the following indications:

- **On**: the logical link is up (port is in the Active state).**Off**: the physical link is down (port is in the Down state).

2.8.1.3.2 Fabric Manager (FM)

The FM LED indicates that the switch is recognized by the active Fabric Manager.

2.8.1.3.3 Managed (M)

The Managed (M) LED indicates that a Q7 management module is installed switch.

2.8.1.3.4 FM Switch

On an unmanaged switch the FM Switch LED is used to restrict whether the end-node attached to a switch port is allowed to source Fabric Manager-related packets.

The user activates the LED using a small, straight instrument (e.g., a standard-size paper clip).

Figure 57. Activating the FM Enable Switch LED

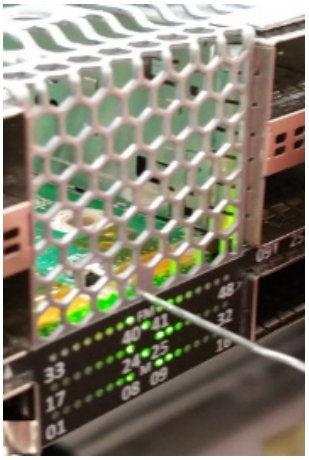

The FM Enable Switch is used as follows:

Note: Actions take place approximately 1 second after releasing the button.

- Pressing the button for 4 seconds does a “Restore Factory Defaults” and reboots the ASIC
- Pressing the button for 2 seconds (and then releasing) puts the “FM control button persistent state” in configuration mode
  - The FM enabled LED will blink “n” times, where “n” is the current state value plus 1
  - Pressing (and releasing) the button once for less than 2 seconds advances the FM control persistent state by 1 (round-robin), and then it returns to step 1 (i.e., blinking the FM enabled LED)
  - Pressing the button for 2 seconds leaves the configuration state, and saves the FM control button state persistently, restoring the FM enabled LED to the proper value

2.8.1.4 Power Supply LEDs

Figure 58. Power Supply LEDs

PSU1/PSU2:

- **Green** indicates that DC power is normal.
- **Off** indicates a DC power failure or no DC power is present.

2.8.1.5 Airflow Direction LED

Figure 59. Airflow Direction LED

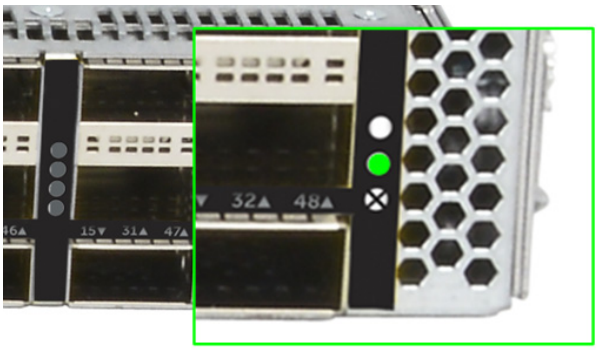

- **Green** indicates the fans are blowing from front to back.
- **Off** indicates the fans are blowing from back to front.

2.8.2 Director Class LEDs

2.8.2.1 Management Module

Figure 60. Management Module LEDs

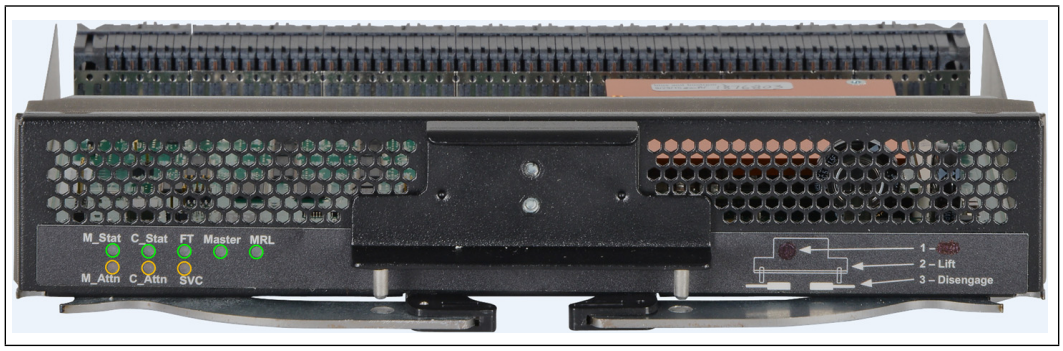

2.8.2.1.1 Module Status (M_Stat)

The status LED indicates one of the following conditions:

- **Steady Green**: the module is operating normally.
- **Blinking Green**: LED test state.
- **Off**: module is in the removable state.

2.8.2.1.2 Module Attention (M_Attn)

The Attention LED indicates one of the following conditions:

- **Off**: the system is functioning normally.
- **Steady Amber**: the system requires some attention, which could indicate one of the following conditions:
  - The management module is at a warning level
  - The microprocessor temperature is at a warning level
  - DC voltages on the board are slightly out of tolerance
  - The management module has taken a hot swap fault
- **Blinking Amber** (once every four seconds): LED test state, which could indicate one of the following conditions:
  - Bulk power is stable.
  - The module DC-to-DC converter is enabled.
  - The module is not removable.

2.8.2.1.3 Chassis Status and Attention (C_Stat, C_Attn)

The chassis status LED is **Green** when the system is functioning normally.

The chassis status LED is **Off** when the system is not functioning normally.

2.8.2.1.4 Fault Tolerant (FT)

The Chassis Fault Tolerant (FT) LED indicates the following condition:

- **Green**: Redundant Cooling, DC Power, and management all present (n+1)

- **Off**: Redundant Cooling, DC Power, and management are not all present

2.8.2.1.5 Service (SVC)

The Chassis Service (SVC) LED indicates the following condition:

- **Green**: Chassis beacon is active
- **Off**: Not selected

2.8.2.1.6 Master

- **Green**: the module is acting as the master Management Module
- **Off**: Management Module is not the Master

2.8.2.1.7 MRL Active

- **Green**: the mechanical release latch (MRL) thumbscrew is secured to the management module, enabling communications with a mated management leaf module
- **Off**: the mechanical release latch (MRL) thumbscrew is not engaged, disabling communications with a mated management leaf module

2.8.2.2 Leaf Module

Figure 61. Leaf Module LEDs

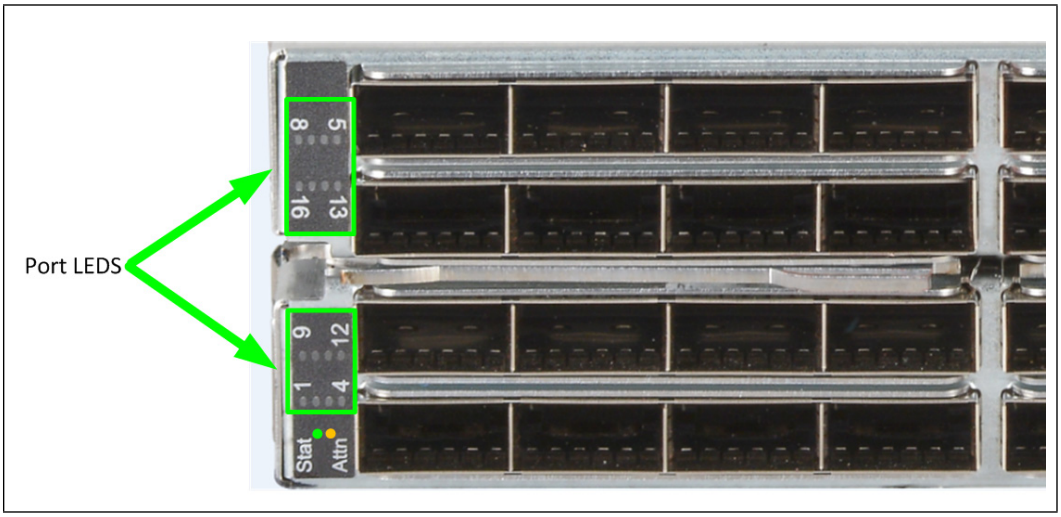

2.8.2.2.1 Port LEDs

- **Green**: The external HFI link is in the Active Port State
- **Off**: Link is not active

2.8.2.2.2 Module Status

The status LED indicates one of the following conditions:

- **Steady Green**: the module is operating normally.
- **Blinking Green**: LED test state.
- **Off**: module is in the removable state.

2.8.2.2.3 Module Attention

The Attention LED indicates one of the following conditions:

- **Off**: the system functioning normally.
- **Steady Amber**: the system requires some attention, which could indicate one of the following conditions:
  - The switch temperature is at a warning level
  - The switch silicon temperature is at a warning level
  - DC voltages on the board are slightly out of tolerance

2.8.2.3 Spine Module

Figure 62. Spine Module LEDs

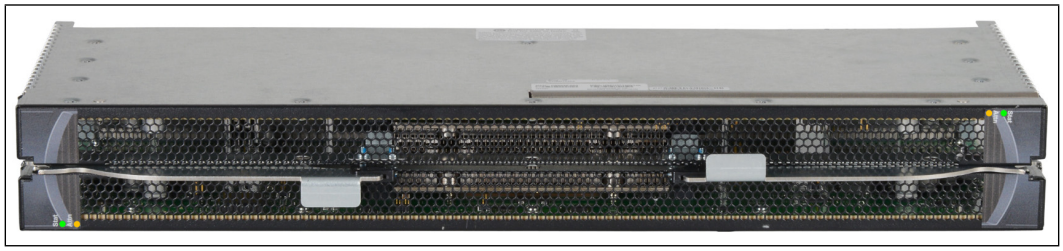

2.8.2.3.1 Module Status (Stat)

The status LED indicates one of the following conditions:

- **Steady Green**: the module is operating normally.
- **Blinking Green**: LED test state.
- **Off**: module is in the removable state.

2.8.2.4 Module Attention (Attn)

The Attention LED indicates one of the following conditions:

- **Off**: the system functioning normally.
- **Steady Amber**: the system requires some attention, which could indicate one of the following conditions:
  - The switch temperature is at a warning level
  - The switch silicon temperature is at a warning level
  - DC voltages on the board are slightly out of tolerance
- **Blinking Amber** (once every four seconds): LED test state.

2.8.2.5 SEEB Module

Figure 63. SEEB Module LEDs

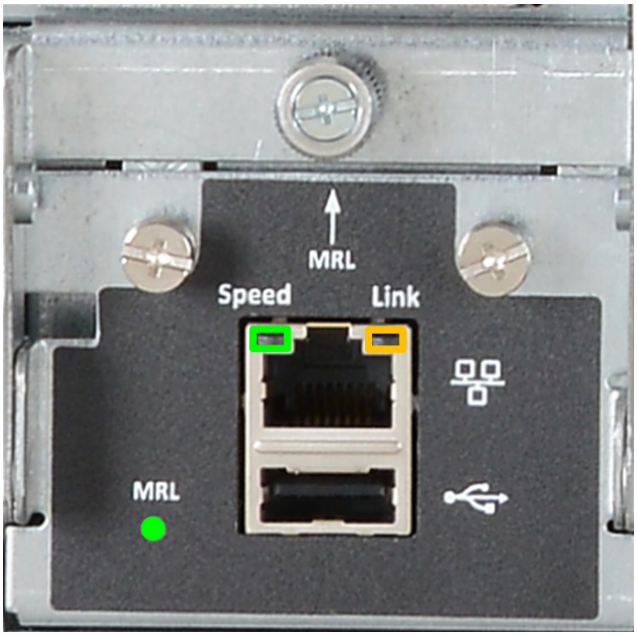

2.8.2.5.1 RJ45 LEDs

The RJ45 connectors have two LEDs, **Link** and **Speed**. The **Speed** LED is **Green** when a 100Mbps link is connected. The **Link** LED is **Amber** when an Ethernet link has been established, and blinking when the link is active.

2.8.2.5.2 MRL Active

- **Green**: the mechanical release latch (MRL) thumbscrew is secured to the serial, Ethernet, chassis EEPROM board (SEEB), enabling communications with a mated management module
- **Off**: the mechanical release latch (MRL) thumbscrew is not engaged, disabling communications with a mated management module

2.8.2.6 Fans and Power Supplies

2.8.2.6.1 Fan LEDs

Figure 64. Director Class Fan LEDs

Fan LEDs indicate the following status(es):

- **Green** indicates that the fan is functioning properly.
- **Amber** indicates that the following warning condition exists:
  - A single fan failure when the rotation speed is less than 4000 RPM or greater than 10,950 RPM.
- **Green** and **Amber** on indicates a possible problem, including:
  - The fan tray is not responding to commands for configuration and temperature-related operations.

— A fan is not responding to commands for temperature and speed related operations.

— The fan speed has fallen below the minimum allowed RPM for a fan.

2.8.2.6.2 Power Supply LEDs

Figure 65. Director Class Power Supply LEDs

Power LEDs indicate the following status(es):

- **AC**: **Green** indicates that AC power is present.
- **DC**: **Green** indicates that DC power is present.
- **FLT**: **Red** indicates that DC power is off/interrupted (e.g., power cord not seated properly).