Intel® Desktop Board D845GVAD2 Product Guide

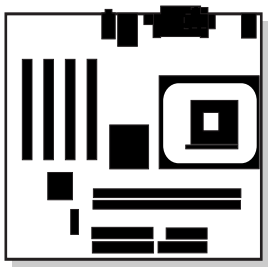

Order Number: C14171-001

Revision History

Revision	Revision History	Date
-001	First release of the Intel® Desktop Board D845GVAD2 Product Guide.	August 2002

If an FCC declaration of conformity marking is present on the board, the following statement applies:

FCC Declaration of Conformity

This device complies with Part 15 of the FCC Rules. Operation is subject to the following two conditions: (1) this device may not cause harmful interference, and (2) this device must accept any interference received, including interference that may cause undesired operation.

For questions related to the EMC performance of this product, contact:

Intel Corporation
5200 N.E. Elam Young Parkway
Hillsboro, OR 97124
1-800-628-8686

This equipment has been tested and found to comply with the limits for a Class B digital device, pursuant to Part 15 of the FCC Rules. These limits are designed to provide reasonable protection against harmful interference in a residential installation. This equipment generates, uses, and can radiate radio frequency energy and, if not installed and used in accordance with the instructions, may cause harmful interference to radio communications. However, there is no guarantee that interference will not occur in a particular installation. If this equipment does cause harmful interference to radio or television reception, which can be determined by turning the equipment off and on, the user is encouraged to try to correct the interference by one or more of the following measures:

- Reorient or relocate the receiving antenna.
- Increase the separation between the equipment and the receiver.
- Connect the equipment to an outlet on a circuit other than the one to which the receiver is connected.
- Consult the dealer or an experienced radio/TV technician for help.

Canadian Department of Communications Compliance Statement

This digital apparatus does not exceed the Class B limits for radio noise emissions from digital apparatus set out in the Radio Interference Regulations of the Canadian Department of Communications.

Le présent appareil numerique német pas de bruits radioélectriques dépassant les limites applicables aux appareils numériques de la classe B prescrites dans le Réglement sur le broullage radioélectrique édicté par le ministére des Communications du Canada.

Disclaimer

Information in this document is provided in connection with Intel® products. No license, express or implied, by estoppel or otherwise, to any intellectual property rights is granted by this document. Except as provided in Intel's Terms and Conditions of Sale for such products, Intel assumes no liability whatsoever, and Intel disclaims any express or implied warranty, relating to sale and/or use of Intel products including liability or warranties relating to fitness for a particular purpose, merchantability, or infringement of any patent, copyright or other intellectual property right. Intel products are not intended for use in medical, life saving, or life sustaining applications. Intel may make changes to specifications and product descriptions at any time, without notice.

Desktop Board D845GVAD2 may contain design defects or errors known as errata which may cause the product to deviate from published specifications. Current characterized errata are available on request.

Contact your local Intel sales office or your distributor to obtain the latest specifications and before placing your product order.

Copies of documents which have an ordering number and are referenced in this document, or other Intel literature, may be obtained from Intel Corporation by going to the World Wide Web site at: http://www.intel.com/ or by calling 1-800-548-4725.

Intel, Celeron and Pentium are registered trademarks of Intel Corporation or its subsidiaries in the United States and other countries.

† Other names and brands may be claimed as the property of others.

Copyright © 2002, Intel Corporation. All rights reserved.

Contents

1 Desktop Board Features

Desktop Board Components 9
Processor 10
Main Memory 11
Intel® 845GV Chipset 11
- Intel® 82845GV Graphics and Memory Controller Hub (GMCH) 12
- Intel® 82801DB I/O Controller Hub (ICH4) 12
- Firmware Hub (FWH) 12

Input/Output (I/O) Controller 12
Integrated Graphics 13
LAN Subsystem (Optional) 13
- LAN Subsystem Software 13
- RJ-45 LAN Connector LEDs 14

Hi-Speed USB 2.0 Support 14
Enhanced IDE Interface 14
Expansion Slots 15
BIOS 15
- PCI Auto Configuration 15
- IDE Auto Configuration 15
- Security Passwords 15

Power Management Features 16
- ACPI 16
- Suspend to RAM (Instantly Available PC Technology) 16

Hardware Management 17
- Power Connectors 17
- Fan Connectors 17
- Resume on Ring 17
- Wake from USB 17
- Wake from PS/2 Keyboard/Mouse 18
- PME# Wakeup Support 18

Speaker 18
Battery 18
Real-Time Clock 18

2 Installing and Replacing Desktop Board Components

Before You Begin 19
Installing the I/O Shield 20
Installing and Removing the Desktop Board 21
Installing and Removing a Processor 22
- Installing a Processor 22
- Installing the Processor Fan Heat Sink 22
- Connecting the Processor Fan Heat Sink Cable 23
- Removing a Processor 23

Installing and Removing Memory 24
Installing DIMMs 24
Removing DIMMs 25
Connecting the IDE Cable 25
Connecting the Front Panel Header 27
Installing a Front Panel Audio Solution (Optional) 27
Installing a Front Panel USB Solution 27
Setting the BIOS Configuration Jumper Block 28
Clearing Passwords 29
Replacing the Battery 29

3 Updating the BIOS

Updating the BIOS with the Intel® Express BIOS Update Utility 33
Updating the BIOS with the Intel® Flash Memory Update Utility 33
Obtaining the BIOS Update File 33
Updating the BIOS 34
Recovering the BIOS 34

4 Using the BIOS Setup Program

Maintenance Menu 38
Main Menu 39
Advanced Menu 40
PCI Configuration Submenu 41
Boot Configuration Submenu 42
Peripheral Configuration Submenu 43
IDE Configuration Submenu 45
Primary/Secondary IDE Master/Slave Submenus 46
Diskette Configuration Submenu 48
Event Log Configuration Submenu 49
Video Configuration Submenu 50
USB Configuration Submenu 51
Chipset Configuration Submenu 52
Security Menu 53
Power Menu 54
ACPI Submenu 54
Boot Menu 55
Boot Device Priority Submenu 56
Hard Disk Drives Submenu 56
Removable Devices Submenu 57
ATAPI CD-ROM Drives 57
Exit Menu 58

5 Technical Reference

Board Connectors 59
Back Panel Connectors 60
Midboard Connectors 61
Audio Connectors 61

Power and Hardware Connectors 62
Add-In Card and Peripheral Interface Connectors.....63
Front Panel Headers 64
Desktop Board Resources.....66
Memory Map 66
DMA Channels 66
Interrupts 67

A Error Messages and Indicators

BIOS Beep Codes.....69
BIOS Error Messages 70

B Regulatory Compliance

Safety Regulations 73
EMC Regulations 73
Product Certification Markings.....74
Installation Instructions.....75
Ensure Electromagnetic Compatibility (EMC) Compliance 75
Chassis and Component Certifications.....76
Prevent Power Supply Overload.....76
Place Battery Marking 76
Use Only for Intended Applications.....76

Figures

1. Desktop Board Components..... 9
2. Location of the Standby Power Indicator.....16
3. Installing the I/O Shield.....20
4. Desktop Board Mounting Holes 21
5. Installing a Processor.....22
6. Connecting the Processor Fan Heat Sink Cable to the Processor Fan Connector.....23
7. Installing a Memory Module 24
8. Connecting the IDE Cable.....26
9. Location of the BIOS Configuration Jumper Block 28
10. Removing the Battery from the Desktop Board.....31
11. Back Panel Connectors 60
12. Audio Connectors 61
13. Power and Hardware Control Connectors.....62
14. Add-in Card and Peripheral Interface Connectors.....63
15. Front Panel Headers.....64

Tables

1. Feature Summary 7
2. Processors Supported by the Desktop Board 10
3. RJ-45 LAN Connector LEDs 14
4. Jumper Settings for the BIOS Setup Program Modes (J9H2) 28
5. BIOS Setup Program Menu Bar 37
6. BIOS Setup Program Function Keys 38
7. Maintenance Menu 38
8. Main Menu 39
9. Advanced Menu 40
10. PCI Configuration Submenu 41
11. Boot Configuration Submenu 42
12. Peripheral Configuration Submenu 43
13. IDE Configuration Submenu 45
14. Primary/Secondary IDE Master/Slave Submenus 46
15. Diskette Configuration Submenu 48
16. Event Log Configuration Submenu 49
17. Video Configuration Submenu 50
18. USB Configuration Submenu 51
19. Chipset Configuration Submenu 52
20. Security Menu 53
21. Power Menu 54
22. ACPI Submenu 54
23. Boot Menu 55
24. Boot Device Priority Submenu 56
25. Hard Disk Drives Submenu 56
26. Removable Devices Submenu 57
27. ATAPI CD-ROM Drives Submenu 57
28. Exit Menu 58
29. Front Panel Audio Header Signal Names (J8A1) 61
30. Front Panel USB 2.0 Header (J9F2) 65
31. Front Panel Header (J9G1) 65
32. System Memory Map 66
33. DMA Channels 66
34. Interrupts 67
35. Beep Codes 69
36. BIOS Error Messages 70
37. Safety Regulations 73
38. EMC Regulations 73

1 Desktop Board Features

Table 1 describes the major features of Intel® Desktop Board D845GVAD2.

Table 1. Feature Summary

Form Factor	• microATX at 9.2 inches by 8.2 inches
Processor	Support for: • 533 MHz or 400 MHz front side bus (FSB) Intel® Pentium® 4 processor in an mPGA_478 socket • 400 MHz FSB Intel® Celeron® processor in an mPGA-478 socket
Memory	• Up to two 184-pin, 2.5 V, Dual Inline Memory Module (DIMM) sockets • DDR266/200 Double Data Rate (DDR) SDRAM interface • Designed to support up to 2 GB of system memory **NOTE:** *Desktop Board D845GVAD2 has been designed to support DIMMs based on 512 Mbit technology up to 2 GB, but this technology has not been validated on this Intel® desktop board. For more information about the latest list of tested memory, refer to the Intel World Wide Web site at:* http://support.intel.com/support/motherboards/desktop/
Chipset	Intel® 845GV chipset, consisting of: • Intel® 82845GV Graphics and Memory Controller Hub (GMCH) with Accelerated Hub Architecture (AHA) bus • Intel® 82801DB I/O Controller Hub (ICH4) with AHA bus with support up to four Hi-Speed Universal Serial Bus 2.0 (USB 2.0) ports • 4 Mbit Firmware Hub (FWH)
I/O Control	• SMSC LPC47M102S-MC low pin count (LPC) interface I/O controller
LAN (optional)	• Intel® 82562ET 10/100 Mbit/sec Platform LAN Connect (PLC) device and RJ-45 connector
Graphics	• Intel 845GV chipset • Integrated Intel® Extreme Graphics
Audio	• Intel 845GV chipset (AC ’97) • Sigmatel audio codec
Expansion Capabilities	Four PCI slots

continued

Table 1. Feature Summary (continued)

Peripheral Interfaces	• Up to four USB 2.0 ports — Two ports routed to the back panel — Two ports routed to the USB front panel header • Two IDE interfaces with Ultra DMA-33 and ATA-66/100 support • One diskette drive interface • One parallel port • Two serial ports (one via a board header) • PS/2† keyboard and mouse ports
BIOS	• Intel/AMI BIOS • Intel® Rapid BIOS Boot • Intel® Express BIOS Update • SMBIOS support
Power Management	• Support for Advanced Configuration and Power Interface (ACPI) • Support for Suspend to RAM (Instantly Available PC) • Wake on USB, PCI, RS-232, LAN, and front panel

NOTE

For information about Intel desktop boards, including the Technical Product Specification (TPS), BIOS updates, and device drivers, go to the Intel World Wide Web site at:

http://support.intel.com/support/motherboards/desktop/

Desktop Board Components

Figure 1 shows the location of the major components on Desktop Board D845GVAD2.

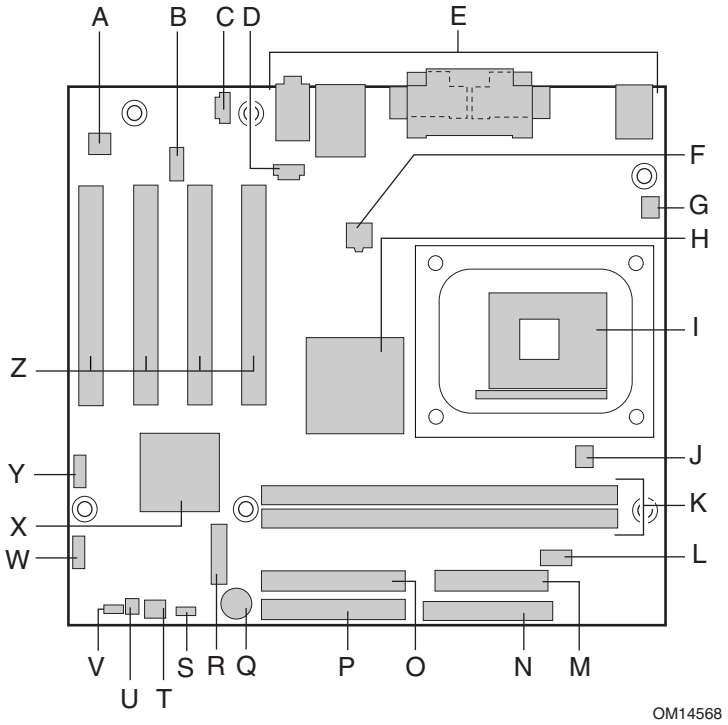

A	Audio codec	N	Diskette drive connector
B	Front panel audio header (optional)	O	Secondary IDE connector
C	Auxiliary line-in connector (ATAPI)	P	Primary IDE connector
D	CD-ROM connector (ATAPI)	Q	Speaker
E	Back panel connectors	R	Battery
F	12 V processor core voltage connector	S	Alternate power/sleep LED connector
G	Rear chassis fan connector	T	Front chassis fan connector
H	Intel 82845GV (GMCH)	U	Chassis intrusion connector
I	Processor socket	V	BIOS configuration jumper
J	Processor fan connector	W	Front panel header
K	DIMM sockets	X	Intel 82801DB (ICH4)
L	Serial port B connector (optional)	Y	Front panel USB 2.0 header
M	Main power connector	Z	PCI bus add-in card connectors

Figure 1. Desktop Board Components

Processor

CAUTION

Failure to use an ATX12V or SFX-12V power supply, or not connecting the additional power supply lead to Desktop Board D845GVAD2 may result in damage to the desktop board and/or power supply.

Desktop Board D845GVAD2 supports a single Intel Pentium 4 processor or Intel Celeron processor. Processors are not included with the desktop board and must be purchased separately.

The processor connects to the desktop board through the mPGA-478-pin socket. The Intel Pentium 4 processor or Intel Celeron processor may be removed and replaced to accommodate supported higher speed processors.

Desktop Board D845GVAD2 supports the processors listed in Table 2.

Table 2. Processors Supported by the Desktop Board

Type	Designation	FSB Frequency	L2 Cache
Intel® Pentium® 4 processor on .13 micron process in an mPGA478 package	2.8, 2.66, 2.53, 2.4B, and 2.26 GHz	533 MHz	512 KB
	2.6, 2.5, 2.40, 2.20, 2A, 1.80A, and 1.60A GHz	400 MHz	512 KB
Intel Pentium 4 processor on .18 micron process in an mPGA478 package	2, 1.90, 1.80, 1.70, 1.60, 1.50, and 1.4 GHz	400 MHz	256 KB
Intel® Celeron® processor in an mPGA478 package	1.8 and 1.7 GHz	400 MHz	128 KB

For the latest information on processor support for Desktop Board D845GVAD2, refer to the Intel World Wide Web site at:

http://support.intel.com/support/motherboards/desktop/

For instructions on installing or upgrading the processor, see Chapter 2 on page 19.

Desktop Board D845GVAD2 requires an ATX12V or SFX-12V compliant power supply to function according to Intel desktop board specifications. The desktop board has two 12 V compliant power supply connectors that are needed to provide extra power to the Intel 845GV chipset and Intel Pentium 4 processor.

Items A and E in Figure 13 on page 62 show the two power connector locations.

Main Memory

NOTE

To be fully compliant with all applicable Intel® SDRAM memory specifications, the Intel desktop board should be populated with DIMMs that support the Serial Presence Detect (SPD) data structure. If your memory modules do not support SPD, you will see a notification to this effect on the screen at power up. The BIOS will attempt to configure the memory controller for normal operation.

NOTE

All memory components and DIMMs used with the desktop board must comply with the PC SDRAM specifications. These include the PC SDRAM Specification (memory component specific), the PC Unbuffered DIMM Specification. To view or download these specifications, refer to this Intel World Wide Web site:

http://www.intel.com/technology/memory/pcsdram/spec/

Desktop Board D845GVAD2 supports system memory as defined below:

- Two 184-pin DIMMs
- 2.5 V, 266 MHz or 200 MHz DDR SDRAM interface
- Memory configurations up to 2 GB using 512 Mbit technology
- Serial Presence Detect (SPD)
- Suspend to RAM (STR)
- Non-ECC RAM (registered memory is not supported)
- Unbuffered and non registered single or double-sided DIMMs

NOTE

Desktop Board D845GVAD2 has been designed to support DIMMs based on 512 Mbit technology up to 2 GB, but this technology has not been validated on this board. For more information about the latest list of tested memory, refer to the Intel World Wide Web site at:

http://support.intel.com/support/motherboards/desktop/

Intel® 845GV Chipset

The Intel 845GV chipset consists of the following:

- Intel 82845GV Graphics and Memory Controller Hub (GMCH) with AHA bus
- Intel 82801DB I/O Controller Hub (ICH4) with AHA bus
- Firmware Hub (FWH)

Intel® 82845GV Graphics and Memory Controller Hub (GMCH)

The GMCH provides the processor, system memory, and hub interfaces in the Intel 845GV chipset platform. Features on Desktop Board D845GVAD2 include:

- Single processor support with 533 MHz/400 MHz data transfer rate
- Support for up to 2 GB DDR SDRAM at 266/200 MHz operation

NOTE

512 Mbit technology has not been validated on this desktop board.

Intel® 82801DB I/O Controller Hub (ICH4)

The ICH4 integrates many I/O functions and provides the I/O subsystem with access to the rest of the platform. ICH4 features on Desktop Board D845GVAD2 include:

- Integrated IDE controller supports two Ultra DMA-33 and ATA-66/100 channels and PIO modes
- SMBus interface
- FWH interface
- Low pin count (LPC) interface
- AC ’97 2.1 compliant link for audio and telephony codecs
- Integrated Intel 82562ET 10/100 Mbit/sec Platform LAN Connect (PLC) device for interfacing the ICH4 LAN connect interface to LAN connect component
- Three UHCI and one ECHI compliant host controllers supporting up to four USB ports

Firmware Hub (FWH)

The 4 Mbit Firmware Hub has these features:

- System BIOS
- System security and management logic

Input/Output (I/O) Controller

The SMSC LPC47M102S-MC ultra I/O controller features the following:

- Low pin count (LPC) interface
- 3.3 V operation
- Two serial ports (one via a board header)
- One parallel port with Extended Capabilities Port (ECP) and Enhanced Parallel Port (EPP) support
- Serial IRQ interface compatible with serialized IRQ support for PCI systems
- PS/2-style mouse and keyboard interfaces
- Interface for one 1.2 MB, 1.44 MB, or 2.88 MB diskette drive
- Intelligent power management, including a programmable wake up event interface
- PCI power management support

Integrated Graphics

The integrated graphics on Desktop Board D845GVAD2 feature:

- Intel 845GV chipset
- Intel Extreme Graphics

Audio Subsystem

The audio subsystem features the following:

- Intel 845GV chipset (AC ’97)
- Sigmatel† STAC9750 audio codec

NOTE

The line out connector, located on the back panel, is designed to power either headphones or amplified speakers only. Poor audio quality may occur if passive (non-amplified) speakers are connected to this output.

Audio drivers and utilities are available from Intel’s World Wide Web site:

http://support.intel.com/support/motherboards/desktop/

LAN Subsystem (Optional)

The optional Intel 82562ET (with the Intel 82801DB ICH4) provides a Fast PCI LAN subsystem providing both 10Base-T and 100Base-TX connectivity. The Intel 82562ET provides the following functions:

- Basic 10/100 Ethernet LAN connectivity
- Supports RJ-45 connector with status indicator LEDs
- Programmable transit threshold
- Configurable EEPROM that contains the MAC address

LAN Subsystem Software

For LAN software and drivers, refer to the D845GVAD2 link on Intel’s World Wide Web site at:

http://support.intel.com/support/motherboards/desktop

RJ-45 LAN Connector LEDs

Two LEDs are built into the RJ-45 LAN connector. Table 3 describes the LED states when the Intel desktop board is powered up and the LAN subsystem is operating.

Table 3. RJ-45 LAN Connector LEDs

LED Color	LED State	Indicates
Green	Off	10 Mbit/sec data rate is selected.
	On	100 Mbit/sec data rate is selected.
Yellow	Off	LAN link is not established.
	On (steady state)	LAN link is established.
	On (brighter and pulsing)	The computer is communicating with another computer on the LAN.

Hi-Speed USB 2.0 Support

NOTE

Computer systems that have an unshielded cable attached to a USB port might not meet FCC Class B requirements, even if no device or a low-speed USB device is attached to the cable. Use a shielded cable that meets the requirements for a full-speed USB device.

This desktop board supports up to four USB 2.0 ports via ICH4; two ports routed to the back panel and two routed to a USB front panel header. USB 2.0 ports are backward compatible with USB 1.1 devices. USB 1.1 devices will function normally at USB 1.1 speeds.

USB 2.0 support requires both an operating system and drivers that fully support USB 2.0 transfer rates. Disabling Hi-Speed USB in BIOS reverts all USB 2.0 ports to USB 1.1 operation. This may be required to accommodate operating systems that do not support USB 2.0.

NOTE

USB devices are limited to USB 1.1 transfer rates prior to operating system and driver initialization.

Enhanced IDE Interface

The ICH4's IDE interface handles the exchange of information between the processor and peripheral devices like hard disks, CD-ROM drives, and Iomega Zip† drives inside the computer. The interface supports:

- Up to four IDE devices (such as hard drives)
- ATAPI devices (such as CD-ROM drives)
- Older PIO Mode devices
- Ultra DMA-33 and ATA-66/100 protocols
- Laser servo (LS-120) drives

Expansion Slots

Desktop Board D845GVAD2 has four PCI bus add-in card connectors.

BIOS

The BIOS provides the Power-On Self-Test (POST), the BIOS Setup program, the PCI and IDE auto-configuration utilities, and the video BIOS. The BIOS is stored in the Firmware Hub.

The BIOS can be updated by following the instructions in Chapter 3 on page 33.

PCI Auto Configuration

If you install a PCI add-in card in your computer, the PCI auto-configuration utility in the BIOS automatically detects and configures the resources (IRQs, DMA channels, and I/O space) for that add-in card. You do not need to run the BIOS Setup program after you install a PCI add-in card.

IDE Auto Configuration

If you install an IDE device (such as a hard drive) in your computer, the IDE auto-configuration utility in the BIOS automatically detects and configures the device for your computer. You do not need to run the BIOS Setup program after installing an IDE device. You can override the auto-configuration options by specifying manual configuration in the BIOS Setup program.

To use ATA-66/100 features, the following items are required:

- An ATA-66/100 peripheral device
- An ATA-66/100 compatible cable
- ATA-66/100 operating system device drivers

Security Passwords

The BIOS includes security features that restrict whether the BIOS Setup program can be accessed and who can boot the computer. A supervisor password and a user password can be set for the Setup and for booting the computer, with the following restrictions:

- The supervisor password gives unrestricted access to view and change all Setup options. If only the supervisor password is set, pressing <Enter> at the password prompt of Setup gives the user restricted access to Setup.
- If both the supervisor and user passwords are set, you must enter either the supervisor password or the user password to access Setup. Setup options are then available for viewing and changing depending on whether the supervisor or user password was entered.
- Setting a user password restricts who can boot the computer. The password prompt is displayed before the computer is booted. If only the supervisor password is set, the computer boots without asking for a password. If both passwords are set, you can enter either password to boot the computer.

Power Management Features

- Advanced Configuration and Power Interface (ACPI)
- Suspend to RAM (Instantly Available PC technology)

ACPI

ACPI gives the operating system direct control over the power management and Plug & Play functions of a computer. The use of ACPI with Desktop Board D845GVAD2 requires an operating system that provides full ACPI support.

Suspend to RAM (Instantly Available PC Technology)

CAUTION

For Instantly Available PC technology, the 5 V standby line for the power supply must be capable of delivering adequate +5 V standby current. Failure to provide adequate standby current when using this feature can damage the power supply and/or effect ACPI S3 sleep state functionality.

Instantly Available PC technology enables the board to enter the ACPI S3 (Suspend-to-RAM) sleep state. While in the S3 sleep state, the computer will appear to be off. When signaled by a wake-up device or event, the system quickly returns to its last known awake state.

The desktop board's standby power indicator, shown in Figure 2, is lit when there is standby power to the system. This includes the memory modules and PCI bus connectors, even when the computer appears to be off.

If the system has a dual-colored power LED on the front panel, the sleep state is indicated by the LED turning amber.

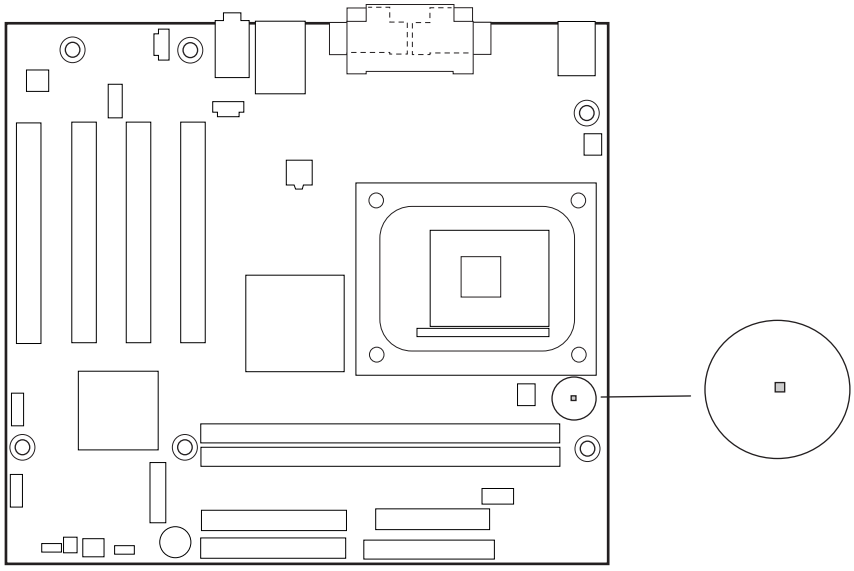

Figure 2. Location of the Standby Power Indicator

CAUTION

Power supplies used with this board must be able to provide enough standby current to support the standard Instantly Available (ACPI S3 sleep state) configuration. If the standby current necessary to support multiple wake events from the PCI and/or USB buses exceeds power supply capacity, the Intel desktop board may lose register settings stored in memory.

For more information on standby current requirements for this desktop board, refer to the TPS by selecting the Technical Documentation link at:

http://developer.intel.com/design/motherbd/

Hardware Management

- Power connectors
- Fan connectors
- Resume on Ring
- Wake from USB
- Wake from PS/2 keyboard/mouse
- PME# wake up support

Power Connectors

Desktop Board D845GVAD2 has two power connectors. See Figure 13 on page 62 for the location of the power connectors.

Fan Connectors

Desktop Board D845GVAD2 has two chassis fan connectors and one processor fan connector. See Figure 13 on page 62 for the location of the fan connectors.

Resume on Ring

The operation of Resume on Ring can be summarized as follows:

- Resumes operation from either ACPI S1 or ACPI S3 state
- Requires only one call to access the computer
- Detects incoming call similarly for external and internal modems
- Requires modem interrupt be unmasked for correct operation

Wake from USB

USB bus activity wakes the computer from an ACPI S1 or S3 state.

NOTE

Wake from USB requires the use of a USB peripheral that supports Wake from USB.

Wake from PS/2 Keyboard/Mouse

PS/2 keyboard/mouse activity wakes the computer from an ACPI S1 or S3 state.

PME# Wakeup Support

When the PME# signal on the PCI bus is asserted, the computer wakes from an ACPI S1, S3, or S5 state.

Speaker

A speaker is mounted on the desktop board. The speaker provides audible error code (beep code) information during the Power-On Self-Test (POST).

Battery

A battery on the board keeps the values in CMOS RAM and the clock current when the computer is turned off. See Chapter 2 starting on page 19 for instructions on how to replace the battery.

Real-Time Clock

Desktop Board D845GVAD2 has a time-of-day clock and 100-year calendar. A battery on the Intel desktop board keeps the clock current when the computer is turned off.

2 Installing and Replacing Desktop Board Components

This chapter tells you how to:

- Install the I/O shield
- Install and remove the desktop board
- Install and remove a processor
- Install and remove memory
- Connect the IDE cable
- Connect the front panel header (not included)
- Install the front panel audio solution (not included)
- Install the front panel USB solution (not included)
- Set the BIOS configuration jumper block
- Clear passwords
- Replace the battery

Before You Begin

WARNINGS

The procedures in this chapter assume familiarity with the general terminology associated with personal computers and with the safety practices and regulatory compliance required for using and modifying electronic equipment.

Disconnect the computer from its power source and from any telecommunications links, networks, or modems before performing any of the procedures described in this chapter. Failure to disconnect power, telecommunications links, networks, or modems before you open the computer or perform any procedures can result in personal injury or equipment damage. Some circuitry on the board can continue to operate even though the front panel power button is off.

CAUTION

Before you install this board in a chassis, see Appendix B for regulatory requirements and precautions.

- *Always follow the steps in each procedure in the correct order.*
- *Set up a log to record information about your computer, such as model, serial numbers, installed options, and configuration information.*
- *Electrostatic discharge (ESD) can damage components. Perform the procedures described in this chapter only at an ESD workstation using an antistatic wrist strap and a conductive foam pad. If such a station is not available, you can provide some ESD protection by wearing an antistatic wrist strap and attaching it to a metal part of the computer chassis.*

Installing the I/O Shield

The Intel desktop board comes with an I/O shield. When installed in the chassis, the shield blocks radio frequency transmissions, protects internal components from dust and foreign objects, and promotes correct airflow within the chassis.

Install the I/O shield before installing the desktop board in the chassis. Place the shield inside the chassis as shown in Figure 3. Press the shield into place so that it fits tightly and securely. If the shield doesn't fit, obtain a properly-sized shield from the chassis supplier.

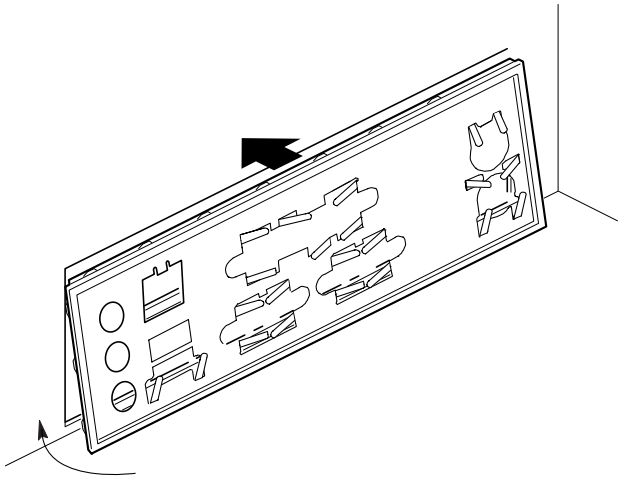

Figure 3. Installing the I/O Shield

Installing and Removing the Desktop Board

Refer to your chassis manual for instructions on installing and removing the desktop board.

WARNING

Only qualified technical personnel should do this procedure. Disconnect the computer from its power source before performing the procedures described here. Failure to disconnect the power before you open the computer can result in personal injury or equipment damage.

NOTES

You will need a Phillips† (#2 bit) screwdriver.

Refer to Appendix B for regulatory requirements and installation instructions and precautions.

Figure 4 shows the location of the six mounting holes for the desktop board.

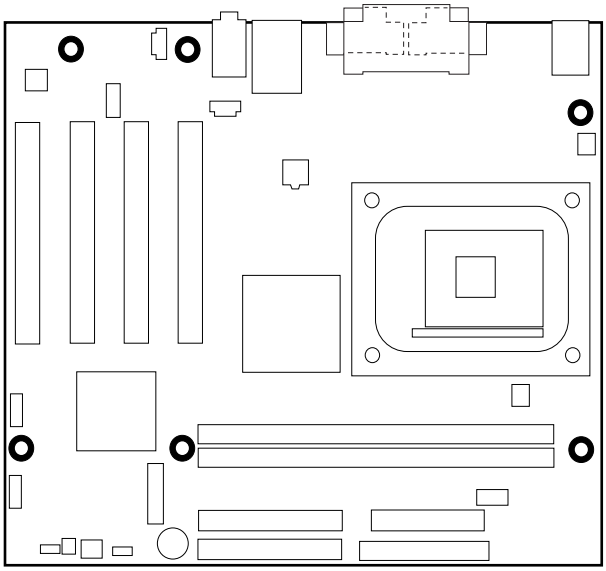

Figure 4. Desktop Board Mounting Holes

Installing and Removing a Processor

Instructions on how to install the processor to the desktop board are given below.

Installing a Processor

CAUTION

Before installing or removing the processor, make sure that AC power has been removed by unplugging the power cord from the computer; the standby power LED should not be lit (see Figure 2 on page 16). Failure to do so could damage the processor and the Intel desktop board.

To install a processor, follow these instructions:

1. Observe the precautions in "Before You Begin" on page 19.
2. Locate the processor socket and raise the socket lever completely.
3. Install the processor so that the corner with the triangle marking (A) is aligned with the corner where the lever is attached to the socket (see Figure 5).
4. Lower the lever to its original position.

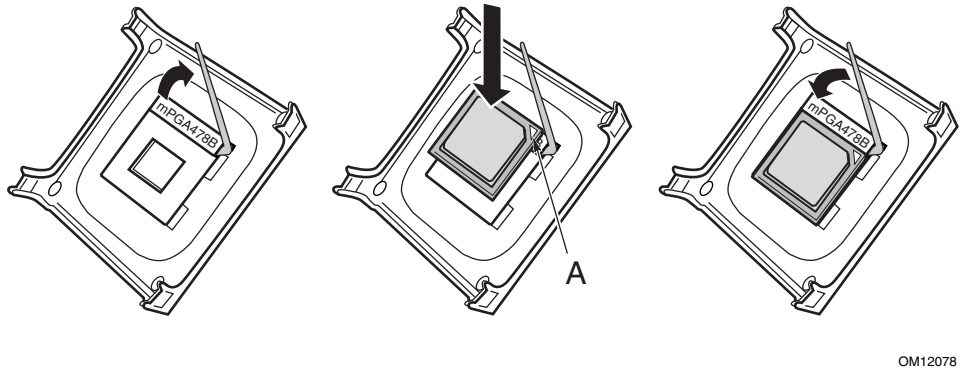

Figure 5. Installing a Processor

Installing the Processor Fan Heat Sink

Desktop Board D845GVAD2 has an integrated processor fan heat sink retention mechanism (RM). For instructions on how to install the processor fan heat sink to the integrated processor fan heat sink RM, refer to the boxed processor manual or the Intel World Wide Web site at:

http://support.intel.com/support/processors/pentium4/intnotes478.htm

Connecting the Processor Fan Heat Sink Cable

Connect the processor fan heat sink cable to the processor fan connector (see Figure 6).

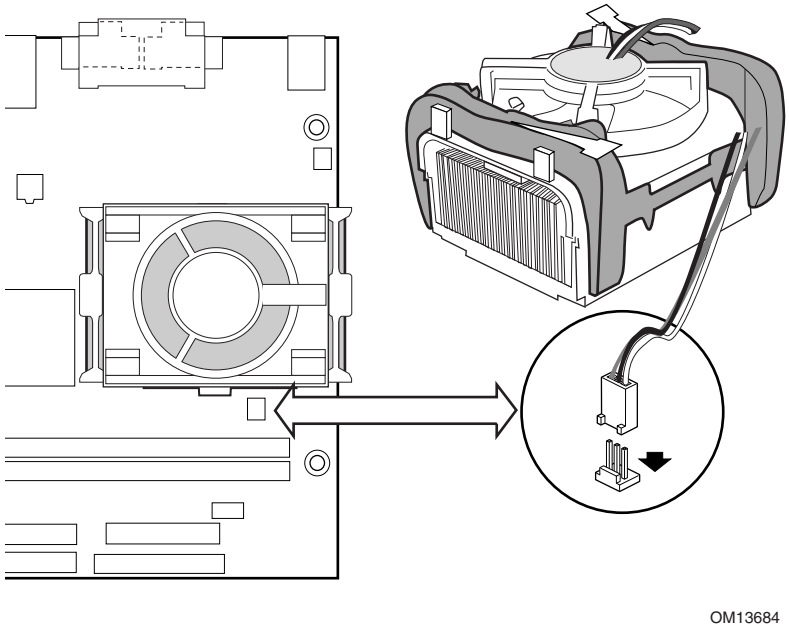

Figure 6. Connecting the Processor Fan Heat Sink Cable to the Processor Fan Connector

Removing a Processor

For instruction on how to remove the processor fan heat sink, refer to the processor installation manual or the Intel World Wide Web site at:

http://support.intel.com/support/processors/pentium4/intnotes478.htm

Installing and Removing Memory

CAUTION

To be fully compliant with all applicable Intel SDRAM memory specifications, the board requires DIMMs that support the Serial Presence Detect (SPD) data structure.

You can access the PC Serial Presence Detect Specification at:

http://www.intel.com/technology/memory/pcsdram/spec/

NOTE

Remove the PCI bus connector 1 card before installing or upgrading memory to avoid interference with the memory retention mechanism.

Desktop Board D845GVAD2 has two DIMM sockets arranged as DIMM 0 and DIMM 1, as shown in Figure 7. If installing a single DIMM, install it in DIMM 0.

Refer to the Main Memory heading on page 11 for memory requirements.

Installing DIMMs

To install DIMMs, follow these steps:

1. Observe the precautions in “Before You Begin” on page 19.
2. Turn off all peripheral devices connected to the computer. Turn off the computer and disconnect the AC power cord.
3. Remove the computer’s cover and locate the DIMM sockets (see Figure 7).

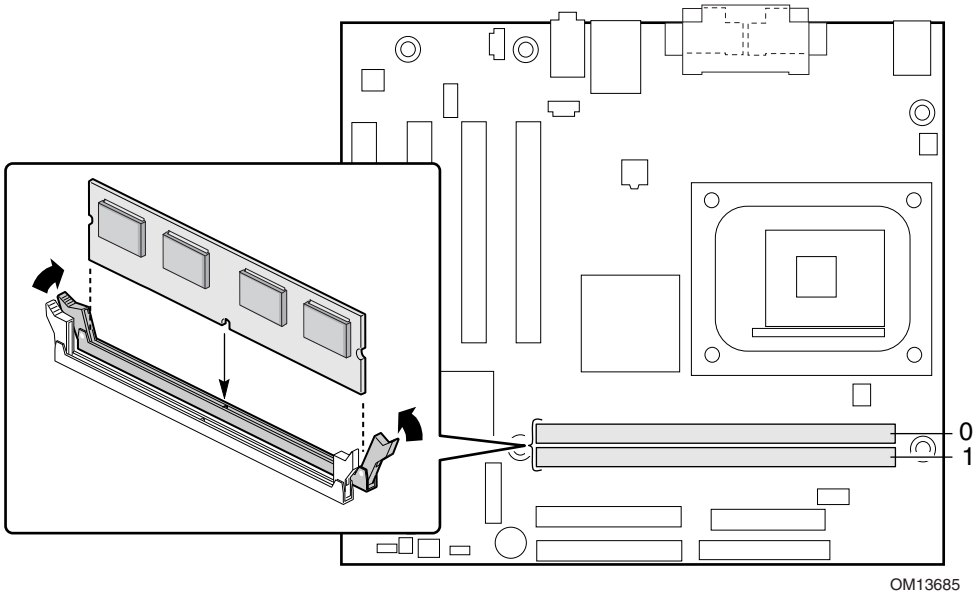

Figure 7. Installing a Memory Module

4. Make sure the clips at either end of the DIMM socket(s) are pushed outward to the open position.
5. Position the DIMM above the socket. Align the two small notches in the bottom edge of the DIMM with the keys in the socket (see inset in Figure 7).
6. Insert the bottom edge of the DIMM into the socket.
7. When the DIMM is inserted, push down on the top edge of the DIMM until the retaining clips snap into place. Make sure the clips are firmly in place.
8. Replace the computer's cover and reconnect the AC power cord.

Removing DIMMs

To remove a memory module, follow these steps:

1. Observe the precautions in "Before You Begin" on page 19.
2. Turn off all peripheral devices connected to the computer. Turn off the computer.
3. Remove the AC power cord from the computer.
4. Remove the computer's cover.
5. Gently spread the retaining clips at each end of the DIMM socket. The DIMM pops out of the socket.
6. Hold the DIMM by the edges, lift it away from the socket, and store it in an anti-static package.
7. Reinstall and reconnect any parts you removed or disconnected to reach the DIMM sockets.
8. Replace the computer's cover and reconnect the AC power cord.

Connecting the IDE Cable

The Intel® boxed desktop board package includes an IDE cable. The cable connects two drives to the desktop board. The cable supports ATA-66 and ATA-100 transfer protocols and is backward compatible with drives using slower IDE transfer protocols. Figure 8 shows the correct installation of the cable.

NOTE

ATA-66/100 compatible cables are backward compatible with drives using slower IDE transfer protocols. If an ATA-66/100 disk drive and a disk drive using any other IDE transfer protocol are attached to the same cable, the maximum transfer rate between the drives may be reduced to that of the slowest drive.

NOTE

Do not connect an ATA device as a slave on the same IDE cable as an ATAPI master device. For example, do not connect an ATA hard drive as a slave to an ATAPI CD-ROM drive.

For correct function of the cable:

- Attach the cable end with the single connector to the Intel desktop board (see Figure 8, A).
- Attach the cable end with the two closely spaced connectors to the drives (see Figure 8, B).

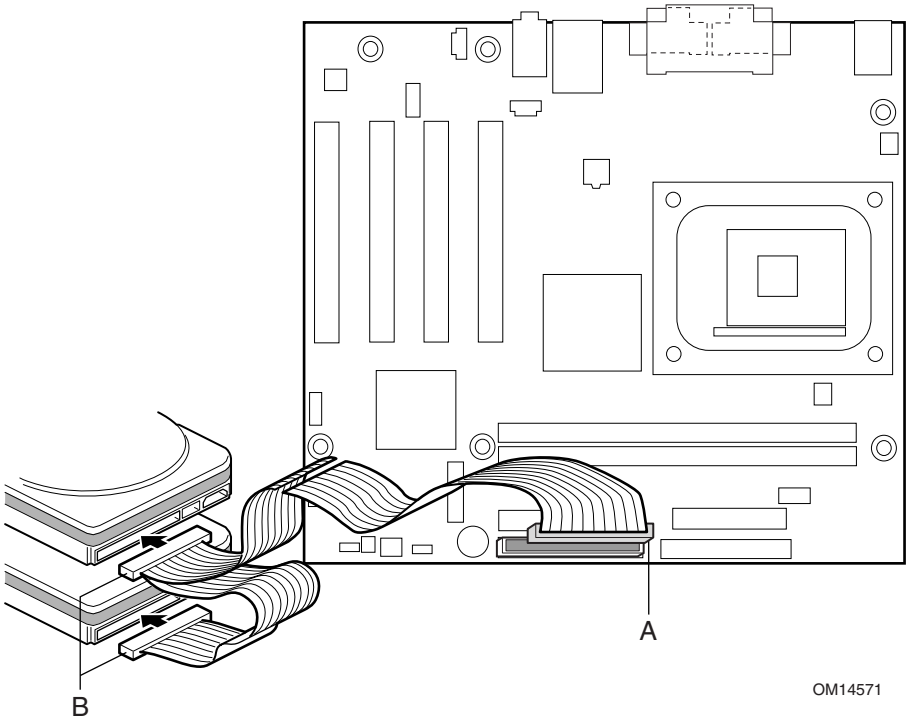

Figure 8. Connecting the IDE Cable

Connecting the Front Panel Header

Before connecting the front panel header, observe the precautions in “Before You Begin” on page 19. Refer to Table 31 on page 65 for pin assignments.

Installing a Front Panel Audio Solution (Optional)

To install the cable that connects the front panel audio solution to the front panel audio header, follow these steps:

1. Observe the precautions in “Before You Begin” on page 19.
2. Turn off all peripheral devices connected to the computer. Turn off the computer and disconnect the AC power cord.
3. Remove the cover. Locate the front panel audio header (J8A1), see Figure 12 on page 61.
4. Remove the two jumpers from the header (this disables the back panel audio connectors).
5. Install a correctly keyed and shielded front panel audio cable.
6. Connect the audio cable to the front panel audio solution.
7. Replace the cover.

To restore back panel operations, follow these steps:

1. Observe the precautions in “Before You Begin” on page 19.
2. Turn off all peripheral devices connected to the computer. Turn off the computer and disconnect the AC power cord.
3. Remove the cover. Remove the front panel audio cable.
4. Install a jumper on pins 5-6 (rear R channel).
5. Install a jumper on pins 9-10 (rear L channel).
6. Replace the cover.

Installing a Front Panel USB Solution

Before installing a front panel USB 2.0 solution, observe the precautions in “Before You Begin” on page 19. Refer to Table 30 on page 65 for pin assignments.

Setting the BIOS Configuration Jumper Block

Figure 9 shows the location of the BIOS configuration jumper block (J9H2).

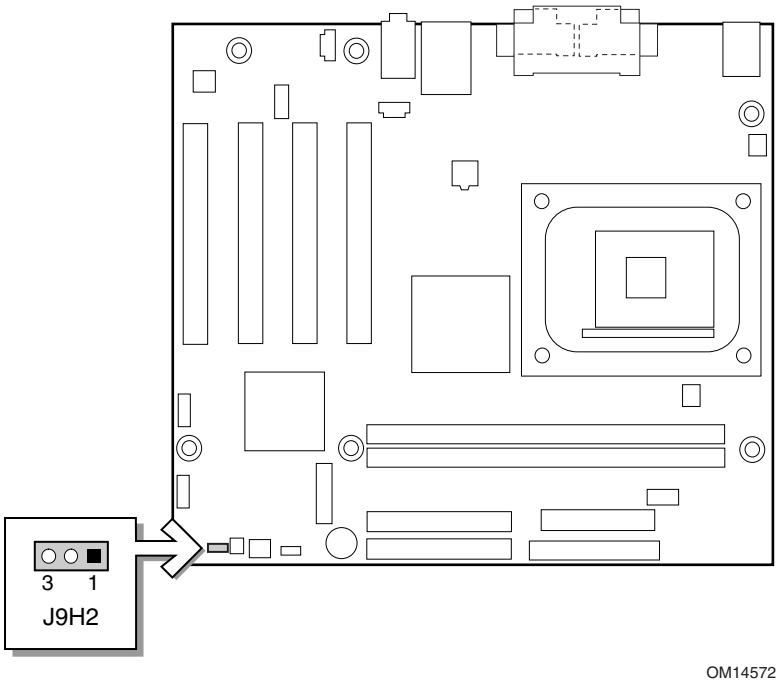

Figure 9. Location of the BIOS Configuration Jumper Block

The three-pin BIOS jumper block enables all board configurations to be done in BIOS Setup. Table 4 shows the jumper settings for the Setup program modes.

Table 4. Jumper Settings for the BIOS Setup Program Modes (J9H2)

Jumper Setting	Mode	Description
3 1	Normal (default) (1-2)	The BIOS uses the current configuration and passwords for booting.
3 1	Configure (2-3)	After the Power-On Self-Test (POST) runs, the BIOS displays the Maintenance Menu. Use this menu to clear passwords.
3 1	Recovery (None)	Recovers BIOS from a diskette in the event of a failed BIOS update.

Clearing Passwords

This procedure assumes that the board is installed in the computer and the configuration jumper block is set to normal mode.

1. Observe the precautions in “Before You Begin” on page 19.
2. Turn off all peripheral devices connected to the computer. Turn off the computer. Disconnect the computer’s power cord from the AC power source (wall outlet or power adapter).
3. Remove the computer cover.
4. Find the configuration jumper block (see Figure 9).
5. Place the jumper on pins 2-3 as shown below.

6. Replace the cover, plug in the computer, turn on the computer, and allow it to boot.
7. The computer starts the Setup program. Setup displays the maintenance menu.
8. Use the arrow keys to select Clear Passwords. Press <Enter> and Setup displays a pop-up screen requesting that you confirm clearing the password. Select Yes and press <Enter>. Setup displays the maintenance menu again.
9. Press <F10> to save the current values and exit Setup.
10. Turn off the computer. Disconnect the computer’s power cord from the AC power source.
11. Remove the computer cover.
12. To restore normal operation, place the jumper on pins 1-2 as shown below.

13. Replace the cover, plug in the computer, and turn on the computer.

Replacing the Battery

A coin-cell battery (CR2032) powers the real-time clock and CMOS memory. When the computer is not plugged into a wall socket, the battery has an estimated life of three years. When the computer is plugged in, the standby current from the power supply extends the life of the battery. The clock is accurate to ± 13 minutes/year at 25 ºC with 3.3 VSB applied.

When the voltage drops below a certain level, the BIOS Setup program settings stored in CMOS RAM (for example, the date and time) might not be accurate. Replace the battery with an equivalent one. Figure 10 on page 31 shows the location of the battery.

CAUTION

Risk of explosion if the battery is replaced with an incorrect type. Batteries should be recycled where possible. Disposal of used batteries must be in accordance with local environmental regulations.

PRECAUTION

Risque d'explosion si la pile usagée est remplacée par une pile de type incorrect. Les piles usagées doivent être recyclées dans la mesure du possible. La mise au rebut des piles usagées doit respecter les réglementations locales en vigueur en matière de protection de l'environnement. (French)

FORHOLDSREGEL

Eksplosionsfare, hvis batteriet erstattes med et batteri af en forkert type. Batterier bør om muligt genbruges. Bortskaffelse af brugte batterier bør foregå i overensstemmelse med gældende miljølovgivning.

(Danish)

OBS!

Det kan oppstå eksplosjonsfare hvis batteriet skiftes ut med feil type. Brukte batterier bør kastes i henhold til gjeldende miljølovgivning.

(Norwegian)

VIKTIGT!

Risk för explosion om batteriet ersätts med felaktig batterityp. Batterier ska kasseras enligt de lokala miljövårdsbestämmelserna.

(Swedish)

VARO

Räjähdysvaara, jos pariston tyyppi on väärä. Paristot on kierrätettävä, jos se on mahdollista. Käytetyt paristot on hävitettävä paikallisten ympäristömääräysten mukaisesti.

(Finnish)

VORSICHT

Bei falschem Einsetzen einer neuen Batterie besteht Explosionsgefahr. Die Batterie darf nur durch denselben oder einen entsprechenden, vom Hersteller empfohlenen Batterietyp ersetzt werden. Entsorgen Sie verbrauchte Batterien den Anweisungen des Herstellers entsprechend.

(German)

AVVERTIMENTO

Esiste il pericolo di un esplosione se la pila non viene sostituita in modo corretto. Utilizzare solo pile uguali o di tipo equivalente a quelle consigliate dal produttore. Per disfarsi delle pile usate, seguire le istruzioni del produttore.

(Italian)

PRECAUCIÓN

Existe peligro de explosión si la pila no se cambia de forma adecuada. Utilice solamente pilas iguales o del mismo tipo que las recomendadas por el fabricante del equipo. Para deshacerse de las pilas usadas, siga igualmente las instrucciones del fabricante.

(Spanish)

WAARSCHUWING

Er bestaat ontploffingsgevaar als de batterij wordt vervangen door een onjuist type batterij. Batterijen moeten zoveel mogelijk worden gerecycled. Houd u bij het weggooien van gebruikte batterijen aan de plaatselijke milieuwetgeving.

(Dutch)

ATENÇÃO

Haverá risco de explosão se a bateria for substituída por um tipo de bateria incorreto. As baterias devem ser recicladas nos locais apropriados. A eliminação de baterias usadas deve ser feita de acordo com as regulamentações ambientais da região.
(Brazilian Portuguese)

To replace the battery, follow these steps:

1. Observe the precautions in “Before You Begin” (see page 19).
2. Turn off all peripheral devices connected to the computer. Disconnect the computer’s power cord from the AC power source (wall outlet or power adapter).
3. Remove the computer cover.
4. Locate the battery on the board (see Figure 10).
5. Note the orientation of the “+” and “-” on the battery.
6. Install the new battery in the connector, orienting the “+” and “-” correctly.
7. Replace the computer cover.

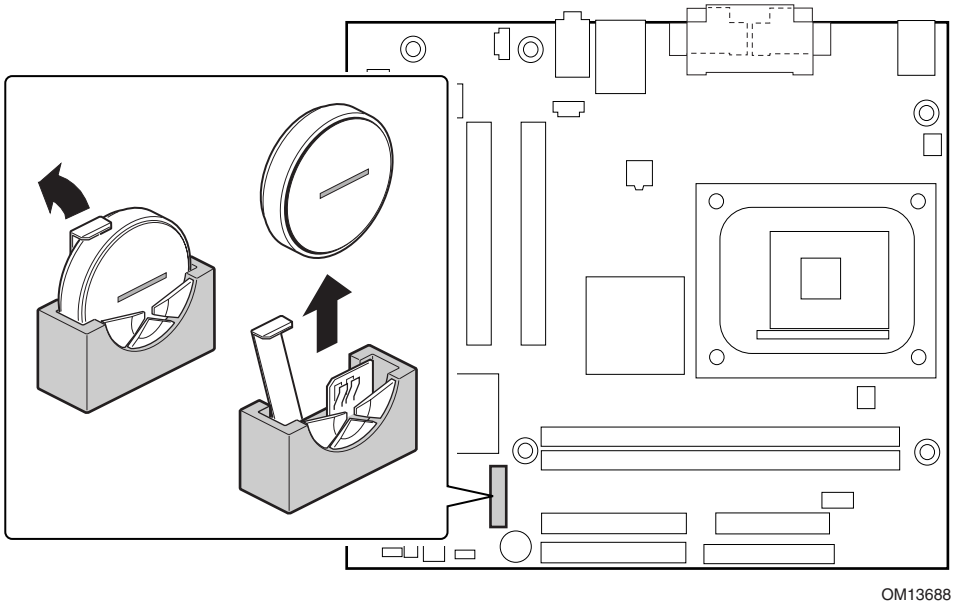

Figure 10. Removing the Battery from the Desktop Board

3 Updating the BIOS

This chapter tells you how to update the BIOS by either using the Intel Express BIOS Update utility or the Intel® Flash Memory Update Utility, and how to recover the BIOS if an update fails.

Updating the BIOS with the Intel® Express BIOS Update Utility

With the Intel Express BIOS Update utility you can update the system BIOS while in the Windows† environment. The BIOS file is included in an automated update utility that combines the functionality of the Intel Flash Memory Update Utility and the ease-of use of Windows-based installation wizards.

To update the BIOS with the Intel Express BIOS Update utility:

1. Go to the Intel World Wide Web site:
   http://support.intel.com/support/motherboards/desktop/
2. Navigate to the D845GVAD2 page and click the Express BIOS Update utility file for the D845GVAD2 board's BIOS.
3. Download the file to your hard drive. (You can also save this file to a diskette. This is useful if you are updating the BIOS for multiple identical systems.)
4. Close all other applications. This step is required. Your system will be rebooted at the last Express BIOS Update window.
5. Double-click the executable file from the location on your hard drive where it was saved. This runs the update program.
6. Follow the instructions provided in the dialog boxes to complete the BIOS update.

Updating the BIOS with the Intel® Flash Memory Update Utility

With the Intel Flash Memory Update Utility you can update the system BIOS from a floppy disk or other bootable media. The utility available from the Web provides a simple method for creating a bootable flash memory update floppy that will automatically update your BIOS.

Obtaining the BIOS Update File

You can update to a new version of the BIOS by using the BIOS update file. The BIOS update file is a compressed self-extracting archive that contains all the files you need to update the BIOS. The BIOS update file contains:

- New BIOS files
- BIOS recovery files
- Intel Flash Memory Update Utility

You can obtain the BIOS update file through your computer supplier or by navigating to the D845GVAD2 page on the Intel World Wide Web site:

http://support.intel.com/support/motherboards/desktop

NOTE

Review the instructions distributed with the update utility before attempting a BIOS update.

The Intel Flash Memory Update Utility allows you to:

- Update the BIOS in flash memory
- Update the language section of the BIOS

Updating the BIOS

CAUTION

The AUTOEXEC.BAT file provided with the update files updates the BIOS. Do not interrupt the process or the system may not function.

1. Boot the computer with the BIOS update diskette in drive A. During system boot, the AUTOEXEC.BAT file provided with the update files will automatically run the BIOS update process.
2. When the update process is complete, the monitor will display a message telling you to remove the diskette and to reboot the system.
3. As the computer boots, check the BIOS identifier (version number) to make sure the update was successful. If a logo appears, press <Esc> to view the POST messages.

Recovering the BIOS

It is unlikely that anything will interrupt the BIOS update, however, if an interruption occurs, the BIOS could be damaged. The following steps explain how to recover the BIOS if an update fails. The following procedure uses recovery mode for the Setup program. See page 28 for more information on Setup modes.

NOTE

Because of the small amount of code available in the boot block area, there is no video support. You will not see anything on the screen during this procedure. Monitor the procedure by listening to the speaker and looking at the diskette drive LED.

1. Turn off the computer, disconnect the computer's power cord, and disconnect all external peripherals.
2. Remove the computer cover and locate the configuration jumper block (see Figure 9).
3. Remove the jumper from all pins as shown below to set recovery mode for Setup.

4. Insert the bootable BIOS update diskette into diskette drive A.
5. Replace the computer cover, connect the power cord, turn on the computer, and allow it to boot. The recovery process will take a few minutes.

6. Listen to the speaker:
   - Upon applying power, drive A will begin to show activity. In about a minute, two beeps are heard and drive A activity ceases (temporarily) indicating the successful recovery of the BIOS core. Drive A activity will begin again followed by two more beeps indicating the successful recovery of the boot block. This sequence of events indicates a successful BIOS recovery.
   - A series of continuous beeps indicates a failed BIOS recovery.
7. If recovery fails, return to step 1 and repeat the recovery process.
8. If recovery is successful, turn off the computer, and disconnect its power cord.
9. Remove the computer cover and continue with the following steps.
10. On the jumper block, reinstall the jumper back on pins 1-2 as shown below to set normal mode for Setup.

11. Leave the update diskette in drive A, replace the computer cover, and connect the computer's power cord.
12. Turn on the computer and continue with the BIOS update (see page 34).

4 Using the BIOS Setup Program

The BIOS Setup program can be used to view and change the BIOS settings for the computer. The BIOS Setup program is accessed by pressing the <F2> key after the Power-On Self-Test (POST) memory test begins and before the operating system boot begins.

NOTE

The BIOS Setup menus described in this section may not show the latest settings. For the latest BIOS settings, refer to the Intel Desktop Board D845GVAD2 Technical Product Specification *or the Intel World Wide Web site:*

http://support.intel.com/support/motherboards/desktop

NOTE

For reference purposes, you should write down the current Setup settings. When you make changes to the settings, update this record.

NOTE

The Setup menus described in this section apply to the desktop board with BIOS identifier LY84510A.86A. Desktop boards with other BIOS identifiers might have differences in some of the Setup menu screens.

The Setup screen menu bar is shown below.

Maintenance	Main	Advanced	Security	Power	Boot	Exit

Table 5 shows the BIOS Setup program menu bar.

Table 5. BIOS Setup Program Menu Bar

Maintenance	Main	Advanced	Security	Power	Boot	Exit
Clears passwords and Boot Integrity Service (BIS)* credentials, and configures extended configuration memory settings	Allocates resources for hardware components	Configures advanced features available through the chipset	Sets passwords and security features	Configures power management features	Selects boot options and power supply controls	Saves or discards changes to set program options

* For information about the BIS, refer to the Intel Web site at:

http://developer.intel.com/design/security/index1.htm

Table 6 shows the function keys available for menu screens.

Table 6. BIOS Setup Program Function Keys

BIOS Setup Program Function Key	Description
<←> or <→>	Selects a different menu screen
<↑> or <↓>	Moves cursor up or down
<Tab>	Moves cursor to the next field
<Enter>	Executes command or selects the submenu
<F9>	Load the default configuration values for the current menu
<F10>	Save the current values and exits the BIOS Setup program
<Esc>	Exits the menu

Maintenance Menu

Maintenance	Main	Advanced	Security	Power	Boot	Exit

The menu shown in Table 7 is used to clear the Setup passwords. Setup only displays this menu in configure mode. See page 28 for information about setting configure mode.

Table 7. Maintenance Menu

Feature	Options	Description
Clear All Passwords	• Ok • Cancel	Clears both the user and supervisor passwords.
Clear BIS Credentials	• Ok • Cancel	Clears the Wired for Management Boot Integrity Service (BIS) credentials.
CPU Stepping Signature	No options	Displays processor's Stepping Signature.
CPU Microcode Update Revision	No options	Displays processor's Microcode Update Revision.

* For information about the BIS, refer to the Intel Web site at:

http://developer.intel.com/design/security/index1.htm

Main Menu

Maintenance	**Main**	Advanced	Security	Power	Boot	Exit

Table 8 describes the Main Menu. This menu reports processor and memory information and is used to configure the system date and system time.

Table 8. Main Menu

Feature	Options	Description
BIOS Version	No options	Displays the version of the BIOS.
Processor Type	No options	Displays processor type.
Processor Speed	No options	Displays processor speed.
System Bus Speed	No options	Displays the system bus speed.
System Memory Speed	No options	Dislays the system memory speed.
Cache RAM	No options	Displays the size of second-level cache and whether it is ECC-capable.
Total Memory	No options	Displays the total amount of RAM.
Memory Bank 0 Memory Bank 1	No options	Displays the amount and type of RAM in the memory banks.
Language	• **English (default)** • Espanol	Selects the current default language used by the BIOS.
System Time	Hour, minute, and second	Specifies the current time.
System Date	Day of week Month/day/year	Specifies the current date.

Advanced Menu

Maintenance	Main	**Advanced**	Security	Power	Boot	Exit
		PCI Configuration				
		Boot Configuration				
		Peripheral Configuration				
		IDE Configuration				
		Diskette Configuration				
		Event Log Configuration				
		Video Configuration				
		USB Configuration				
		Chipset Configuration				

Table 9 describes the Advanced Menu. This menu is used to set advanced features that are available through the chipset.

Table 9. Advanced Menu

Feature	Options	Description
PCI Configuration	[Enter]	Configures individual PCI slot's IRQ priority. When selected, displays the PCI Configuration submenu.
Boot Configuration	[Enter]	Configures Plug & Play and the Numlock key, and resets configuration data. When selected, displays the Boot Configuration submenu.
Peripheral Configuration	[Enter]	Configures peripheral ports and devices. When selected, displays the Peripheral Configuration submenu.
IDE Configuration	[Enter]	Specifies type of connected IDE device.
Diskette Configuration	[Enter]	Configures the floppy drive(s). When selected, displays the Diskette Configuration submenu.
Event Log Configuration	[Enter]	Configures event logging. When selected, displays the Event Log Configuration submenu.
Video Configuration	[Enter]	Configures video features. When selected, displays the Video Configuration submenu.
USB Configuration	[Enter]	Configures USB features. When selected, displays the USB Configuration submenu.
Chipset Configuration	[Enter]	Configures chipset features. When selected, displays the Chipset Configuration submenu.

PCI Configuration Submenu

Maintenance	Main	**Advanced**	Security	Power	Boot	Exit
		PCI Configuration				
		Boot Configuration				
		Peripheral Configuration				
		IDE Configuration				
		Diskette Configuration				
		Event Log Configuration				
		Video Configuration				
		USB Configuration				
		Chipset Configuration				

The submenu shown in Table 10 is used to configure the IRQ priority of PCI slots individually.

Table 10. PCI Configuration Submenu

Feature	Options	Description
PCI Slot 1 IRQ Priority	• **Auto (default)** • 5 • 9 • 10 • 11	Allows selection of IRQ priority.
PCI Slot 2 IRQ Priority	• **Auto (default)** • 5 • 9 • 10 • 11	Allows selection of IRQ priority and S5 wake.
PCI Slot 3 IRQ Priority	• **Auto (default)** • 5 • 9 • 10 • 11	Allows selection of IRQ priority.
PCI Slot 4 IRQ Priority	• **Auto (default)** • 5 • 9 • 10 • 11	Allows selection of IRQ priority.

Boot Configuration Submenu

Maintenance	Main	**Advanced**	Security	Power	Boot	Exit
		PCI Configuration				
		Boot Configuration				
		Peripheral Configuration				
		IDE Configuration				
		Diskette Configuration				
		Event Log Configuration				
		Video Configuration				
		USB Configuration				
		Chipset Configuration				

The submenu shown in Table 11 is used to set the Plug & Play options and the power-on state of the Numlock key.

Table 11. Boot Configuration Submenu

Feature	Options	Description
Plug & Play O/S	• **No (default)** • Yes	Specifies if manual configuration is desired. *No* lets the BIOS configure all devices in the system. This setting is appropriate when using a Plug and Play operating system. *Yes* lets the operating system configure Plug & Play (PnP) devices not required for boot if your system has a Plug & Play operating system. This option is available for use during lab testing.
Numlock	• Off • **On (default)**	Specifies the power-on state of the Numlock feature on the numeric keypad of the keyboard.

Peripheral Configuration Submenu

Maintenance	Main	**Advanced**	Security	Power	Boot	Exit
		PCI Configuration				
		Boot Configuration				
		Peripheral Configuration				
		IDE Configuration				
		Diskette Configuration				
		Event Log Configuration				
		Video Configuration				
		USB Configuration				
		Chipset Configuration				

This submenu shown in Table 12 is used for configuring computer peripherals.

Table 12. Peripheral Configuration Submenu

Feature	Options	Description
Serial Port A	• Disabled • Enabled • **Auto (default)**	Configures serial port A. *Auto* assigns the first free COM port, normally COM1, the address 3F8h, and the interrupt IRQ4. An * (asterisk) displayed next to an address indicates a conflict with another device.
Base I/O Address (This feature is present only when Serial Port A is set to *Enabled*)	• **3F8 (default)** • 2F8 • 3E8 • 2E8	Specifies the base I/O address for serial port A, if serial port A is Enabled.
Interrupt (This feature is present only when Serial Port A is set to *Enabled*)	• IRQ 3 • **IRQ 4 (default)**	Specifies the interrupt for serial port A, if serial port A is Enabled.
Serial Port B	• Disabled • Enabled • **Auto (default)**	Configures serial port B. *Auto* assigns the first free COM port, normally COM1, the address 3F8h, and the interrupt IRQ4. An * (asterisk) displayed next to an address indicates a conflict with another device.
Base I/O Address (This feature is present only when Serial Port B is set to *Enabled*)	• 3F8 • **2F8 (default)** • 3E8 • 2E8	Specifies the base I/O address for serial port B, if serial port B is Enabled.
Interrupt (This feature is present only when Serial Port B is set to *Enabled*)	• **IRQ 3 (default)** • IRQ 4	Specifies the interrupt for serial port B, if serial port B is Enabled.

continued

Table 12. Peripheral Configuration Submenu (continued)

Feature	Options	Description
Parallel Port	• Disabled • Enabled • **Auto (default)**	Configures the parallel port. *Auto* assigns LPT1 the address 378h and the interrupt IRQ7. An * (asterisk) displayed next to an address indicates a conflict with another device.
Mode	• Output only • **Bi-directional (default)** • EPP • ECP	Selects the mode for the parallel port. Not available if the parallel port is disabled. *Output Only* operates in AT†-compatible mode. *Bi-directional* operates in PS/2-compatible mode. *EPP* is Extended Parallel Port mode, a high-speed bi-directional mode. *ECP* is Enhanced Capabilities Port mode, a high-speed bi-directional mode.
Base I/O Address (This feature is present only when Parallel Port is set to *Enabled*)	• **378 (default)** • 278	Specifies the base I/O address for the parallel port, if Parallel Port is Enabled.
Interrupt (This feature is present only when Parallel Port is set to *Enabled*)	• IRQ 5 • **IRQ 7 (default)**	Specifies the interrupt for the parallel port, if Parallel Port is Enabled.
DMA (This feature is present only when ECP mode is selected)	• 1 • **3 (default)**	When mode is set to *ECP*, specifies the DMA channel.
Audio	• Disabled • **Enabled (default)**	Enables or disables the onboard audio subsystem.
LAN Device (This feature is present only when there is onboard LAN)	• Disabled • **Enabled (default)**	Enables or disables the LAN device.

IDE Configuration Submenu

Maintenance	Main	**Advanced**	Security	Power	Boot	Exit
		PCI Configuration				
		Boot Configuration				
		Peripheral Configuration				
		IDE Configuration				
		Diskette Configuration				
		Event Log Configuration				
		Video Configuration				
		USB Configuration				
		Chipset Configuration				

This submenu shown in Table 13 is used to configure IDE device options.

Table 13. IDE Configuration Submenu

Feature	Options	Description
IDE Controller	• Disabled • Primary • Secondary • **Both (default)**	Specifies the integrated IDE controller. *Disabled* disables the integrated IDE controller. *Primary* enables only the primary IDE controller. *Secondary* enables only the secondary IDE controller. *Both* enables both IDE controllers.
PCI IDE Bus Master	• Disabled • **Enabled (default)**	Allows for a PCI device to initiate a transaction as a master.
Hard Disk Pre-Delay	• **Disabled (default)** • 3 Seconds • 6 Seconds • 9 Seconds • 12 Seconds • 15 Seconds • 21 Seconds • 30 Seconds	Specifies the hard disk drive pre-delay. Causes the BIOS to insert a delay before attempting to detect IDE drives in the system.
Primary IDE Master	[Enter]	Reports type of connected IDE device. When selected, displays the Primary IDE Master submenu.
Primary IDE Slave	[Enter]	Reports type of connected IDE device. When selected, displays the Primary IDE Slave submenu.
Secondary IDE Master	[Enter]	Reports type of connected IDE device. When selected, displays the Secondary IDE Master submenu.
Secondary IDE Slave	[Enter]	Reports type of connected IDE device. When selected, displays the Secondary IDE Slave submenu.

Primary/Secondary IDE Master/Slave Submenus

Maintenance	Main	**Advanced**	Security	Power	Boot	Exit

PCI Configuration		
Boot Configuration		
Peripheral Configuration		
IDE Configuration	➜	**Primary IDE Master**
Diskette Configuration		**Primary IDE Slave**
Event Log Configuration		**Secondary IDE Master**
Video Configuration		**Secondary IDE Slave**
USB Configuration		
Chipset Configuration		

There are four IDE submenus: Primary master, primary slave, secondary master, and secondary slave. Table 14 shows the format of these IDE submenus. For brevity, only one example is shown.

Table 14. Primary/Secondary IDE Master/Slave Submenus

Feature	Options	Description
Drive Installed	None	Displays the type of drive installed.
Type	• **Auto (default)** • User	Specifies the IDE configuration mode for IDE devices. *Auto* fills-in capabilities from ATA/ATAPI device. *User* allows capabilities to be changed.
Maximum Capacity	None	Displays the capacity of the drive.
LBA Mode (This feature appears only if an IDE device is installed)	• **Auto (default)** • Disabled	Specifies LBA mode control.
Block Mode	• 2 Sectors • 4 Sectors • 8 Sectors • 16 Sectors	When the Type feature is set to *Auto*, specifies number of sectors per block for transfers from the hard disk drive to memory Check the hard disk drive's specifications for optimum setting.
	• **Auto (default)** • Disabled	When the Type feature is set to *User*, these options are displayed. *Disabled*: the Data transfer from and to the device occurs one sector at a time. *Auto*: the Data gransfer from and to the device occurs multiple sectors at a time if the device supports it.

continued

Table 14. Primary/Secondary IDE Master/Slave Submenus (continued)

Feature	Options	Description
PIO Mode (This feature appears only if an IDE device is installed)	• **Auto (default)** • 0 • 1 • 2 • 3 • 4	Specifies the PIO mode.
DMA Mode	• **Auto (default)** • SWDMA 0 • SWDMA 1 • SWDMA 2 • MWDMA 0 • MWDMA 1 • MWDMA 2 • UDMA 0 • UDMA 1 • UDMA 2 • UDMA 3 • UDMA 4 • UDMA 5	Specifies Single Word, Multi Word, or Ultra DMA mode for the drive.
Cable Detected (This option appears only if an IDE device is installed)	None	Displays the type of cable connected to the IDE interface: 40-conductor or 80-conductor (for ATA-66/100 devices).
ARMD Emulation Type (This option appears only if a Zip drive is installed)	• **Floppy (default)** • Hard Disk	Specified ARMD emulation type.

Diskette Configuration Submenu

Maintenance	Main	**Advanced**	Security	Power	Boot	Exit
		PCI Configuration				
		Boot Configuration				
		Peripheral Configuration				
		IDE Configuration				
		Diskette Configuration				
		Event Log Configuration				
		Video Configuration				
		USB Configuration				
		Chipset Configuration				

This submenu shown in Table 15 is used to configure the diskette drive.

Table 15. Diskette Configuration Submenu

Feature	Options	Description
Diskette Controller	• Disabled • **Enabled (default)**	Configures the integrated diskette controller.
Diskette A	• Disabled • 360 KB 5¼” • 1.2 MB 5¼” • 720 KB 3½” • **1.44 MB 3½” (default)** • 2.88 MB 3½”	Selects the diskette drive type.
Diskette Write Protect	• **Disabled (default)** • Enabled	Disables or enables diskette drive write protection.

Event Log Configuration Submenu

Maintenance	Main	**Advanced**	Security	Power	Boot	Exit
		PCI Configuration				
		Boot Configuration				
		Peripheral Configuration				
		IDE Configuration				
		Floppy Configuration				
		Event Log Configuration				
		Video Configuration				
		USB Configuration				
		Chipset Configuration				

The submenu shown in Table 16 is used to configure the event logging features.

Table 16. Event Log Configuration Submenu

Feature	Options	Description
Event Log	No options	Indicates if there is space available in the event log.
View Event Log	[Enter]	Views the contents of the DMI event log.
Clear Event Log	[Enter]	Discards all events in the event log.
Event Logging	• Disabled • **Enabled (default)**	*Enabled* allows logging of DMI events.
Mark Events As Read	[Enter]	Marks all DMI events in the event log as read.

Video Configuration Submenu

Maintenance	Main	**Advanced**	Security	Power	Boot	Exit
		PCI Configuration				
		Boot Configuration				
		Peripheral Configuration				
		IDE Configuration				
		Diskette Configuration				
		Event Log Configuration				
		Video Configuration				
		USB Configuration				
		Chipset Configuration				

The submenu shown in Table 17 is used to configure video features.

Table 17. Video Configuration Submenu

Feature	Options	Description
Graphics Aperture Size	• 4 MB • 8 MB • 16 MB • 32 MB • **64 MB (default)** • 128 MB • 256 MB	Amount of system memory available for direct access by the graphics device.
Primary Video Adapter	• **Integrated (default)** • PCI	Allows selecting a PCI video controller as the display device that will be active when the system boots.
Frame Buffer Size	• 512 KB • **1 MB (default)** • 8 MB	Controls how much system RAM is reserved for use by the internal graphics device.

USB Configuration Submenu

Maintenance	Main	**Advanced**	Security	Power	Boot	Exit
		PCI Configuration				
		Boot Configuration				
		Peripheral Configuration				
		IDE Configuration				
		Diskette Configuration				
		Event Log Configuration				
		Video Configuration				
		USB Configuration				
		Chipset Configuration				

The menu shown in Table 18 is used to configure USB features.

Table 18. USB Configuration Submenu

Feature	Options	Description
High Speed USB	• Disabled • **Enabled (default)**	Disable this option when a USB 2.0 driver is not available.
Legacy USB Support	• Disabled • **Enabled (default)**	Enables support for legacy USB.

Chipset Configuration Submenu

Maintenance	Main	**Advanced**	Security	Power	Boot	Exit
		PCI Configuration				
		Boot Configuration				
		Peripheral Configuration				
		IDE Configuration				
		Diskette Configuration				
		Event Log Configuration				
		Video Configuration				
		USB Configuration				
		Chipset Configuration				

The menu shown in Table 19 is used to configure advanced chipset features.

Table 19. Chipset Configuration Submenu

Feature	Options	Description
ISA Enable Bit	• **Enabled (default)** • Disabled	Some older expansion devices require this to be enabled.
PCI Latency Timer	• **32 (default)** • 64 • 96 • 128 • 160 • 192 • 224 • 248	Set PCI latency time.
Extended Configuration	• **Default (default)** • User Defined	Chooses the default or user defined settings for the extended configuration options.
SDRAM Frequency	• **Auto (default)** • 200 MHz • 266 MHz	Allows override of detected memory frequency value.
SDRAM Timing Control	• **Auto (default)** • Manual – Aggressive • Manual – User Defined	*Auto* allows timings to be programmed according to the memory detected. *Manual – Aggressive* selects the most aggressive user defiend timings. *Manual – User Defined* allows manual override of detected SDRAM settings.

continued

Table 19. Chipset Configuration Submenu (continued)

Feature	Options	Description
SDRAM RAS Act. To Pre.	• 7 • **6 (default)** • 5	Selects length of time from read to pre-change.
SDRAM CAS# Latency	• **3.0 (default)** • 2.0	Selects the number of clock cycles required to address a column in memory.
SDRAM RAS# to CAS# delay	• **3 (default)** • 2	Selects the number of clock cycles between addressing a row and addressing a column.
SDRAM RAS# Precharge	• **3 (default)** • 2	Selects the length of time required before accessing a new row.

Security Menu

Maintenance	Main	Advanced	**Security**	Power	Boot	Exit

The menu shown in Table 20 is used to set passwords and security features.

Table 20. Security Menu

If no password entered previously:		
Feature	**Options**	**Description**
Supervisor Password Is	No options	Reports if there is a supervisor password set.
User Password Is	No options	Reports if there is a user password set.
Set Supervisor Password	Password can be up to seven alphanumeric characters.	Specifies the supervisor password.
User access Level (Note 2)	• Limited • No access • View Only • **Full (default)**	Sets BIOS Setup Utility access rights for user level.
Set User Password	Password can be up to seven alphanumeric characters.	Specifies the user password.
Clear User Password (Note 1)	[Enter]	Clears the user password.
Chassis Intrusion	• **Disabled (default)** • Log • Log, notify once • Log, notify till cleared	Specifies chassis intrusion alert options.

Note 1: This feature appears only if a user password has been set.

Note 2: This feature appears only if both a user password and a supervisor password have been set.

Power Menu

Maintenance	Main	Advanced	Security	**Power**	Boot	Exit

The menu shown in Table 21 is used to set power management features.

Table 21. Power Menu

Feature	Options	Description
ACPI	[Enter]	When selected, displays the ACPI submenu.
After Power Failure	• Stay Off • **Last State (default)** • Power On	Determines the mode of operation if a power loss occurs. *Stay Off* keeps the power off until the power button is pressed. *Last State* restores the previous power state before power loss occurred. *Power On* restores power to the computer.
Wake on PCI PME	• **Stay Off (default)** • Power-On	Determines how the system responds to a PCI-PME wake up event.
Wake on Modem Ring	• **Stay Off (default)** • Power-On	Specifies how the computer responds to a Modem Ring wake up event on an installed modem.

ACPI Submenu

Maintenance	Main	Advanced	Security	**Power**	Boot	Exit
				ACPI		

The submenu represented in Table 22 is for setting the ACPI features.

Table 22. ACPI Submenu

Feature	Options	Description
Suspend Mode	• **S1 State (default)** • S3 State	Specifies the ACPI sleep state.
Wake on LAN from S5	• **Stay Off (default)** • Power On	In ACPI soft-off mode only, determines how the system responds to a LAN wake up event when the system is in the ACPI soft-off mode.

Boot Menu

Maintenance	Main	Advanced	Security	Power	**Boot**	Exit

The menu shown in Table 23 is used to set the boot features and the boot sequence.

Table 23. Boot Menu

Feature	Options	Description
Silent Boot	• Disabled • **Enabled (default)**	*Disabled* displays normal POST messages. *Enabled* displays OEM logo instead of POST messages.
Intel Rapid BIOS Boot	• Disabled • **Enabled (default)**	Allows BIOS to skip certain tests while booting.
Scan User Flash Area	• Disabled • **Enabled (default)**	Enables the BIOS to scan the flash ROM for user binary files that are executed at boot time.
PXE Boot to LAN	• **Disabled (default)** • Enabled	Disables or enables PXE boot to LAN.
USB Boot	• Disabled • **Enabled (default)**	Disables or enables booting to USB boot devices.
Boot Device Priority	[Enter]	Specifies the boot sequence from the available types of boot devices.
Hard Disk Drives	[Enter]	Specifies the boot sequence from the available hard disk drives.
Removable Devices	[Enter]	Specifies the boot sequence from the available removable devices.
ATAPI CD-ROM Drives	[Enter]	Specifies the boot sequence from the available ATAPI CD-ROM drives.

Boot Device Priority Submenu

Maintenance	Main	Advanced	Security	Power	**Boot**	Exit
					Boot Device Priority	
					Hard Disk Drives	
					Removable Devices	
					ATAPI CD-ROM Drives	

The submenu represented in Table 24 is for setting boot devices priority.

Table 24. Boot Device Priority Submenu

Feature	Options	Description
1st Boot Device 2nd Boot Device 3rd Boot Device	• Removable Device • Hard Drive • ATAPI CD-ROM • Disabled	Specifies the boot sequence from the available devices. To specify boot sequence: 1. Select the boot device with <↑> or <↓>. 2. Press <Enter> to set the selection as the intended boot device. The operating system assigns a drive letter to each boot device in the order listed. Changing the order of the devices changes the drive lettering. The default settings for the first through final boot devices are, respectively listed below. The BIOS supports up to sixteen total boot devices in any combination of the boot device types below, with respect to these maximums per type. • Removable Device (maximum of four) • Hard Drive (maximum of 12) • ATAPI CD-ROM (maximum of four)
	• SCSI • PXE	Will appear as options if either of these devices are available.

Hard Disk Drives Submenu

Maintenance	Main	Advanced	Security	Power	**Boot**	Exit
					Boot Device Priority	
					Hard Disk Drives	
					Removable Devices	
					ATAPI CD-ROM Drives	

The submenu shown in Table 25 is for setting hard disk drives.

Table 25. Hard Disk Drives Submenu

Feature	Options	Description
1st Hard Disk Drive (Note)	Dependent on installed hard drives	Specifies the boot sequence from the available hard disk drives. To specify boot sequence: 1. Select the boot device with <↑> or <↓>. 2. Press <Enter> to set the selection as the intended boot device.

Note: This boot device submenu appears only if at least one boot device of this type is installed. This list will display up to twelve hard disk drives, the maximum number of hard disk drives supported by the BIOS.

Removable Devices Submenu

Maintenance	Main	Advanced	Security	Power	**Boot**	Exit
					Boot Device Priority	
					Hard Disk Drives	
					Removable Devices	
					ATAPI CD-ROM Drives	

The submenu in shown Table 26 is for setting removable devices.

Table 26. Removable Devices Submenu

Feature	Options	Description
1st Removable Device (Note)	Dependent on installed removable devices	Specifies the boot sequence from the available removable devices. To specify boot sequence: 1. Select the boot device with <↑> or <↓>. 2. Press <Enter> to set the selection as the intended boot device.

Note: This boot device submenu appears only if at least one boot device of this type is installed. This list will display up to four removable devices, the maximum number of removable devices supported by the BIOS.

ATAPI CD-ROM Drives

Maintenance	Main	Advanced	Security	Power	**Boot**	Exit
					Boot Device Priority	
					Hard Disk Drives	
					Removable Devices	
					ATAPI CD-ROM Drives	

The submenu shown in Table 27 is for setting ATAPI CD-ROM drives.

Table 27. ATAPI CD-ROM Drives Submenu

Feature	Options	Description
1st ATAPI CD-ROM Drive (Note)	Dependent on installed ATAPI CD-ROM drives	Specifies the boot sequence from the available ATAPI CD-ROM drives. To specify boot sequence: 1. Select the boot device with <↑> or <↓>. 2. Press <Enter> to set the selection as the intended boot device.

Note: This boot device submenu appears only if at least one boot device of this type is installed. This list will display up to four ATAPI CD-ROM drives, the maximum number of ATAPI CD-ROM drives supported by the BIOS.

Exit Menu

Maintenance	Main	Advanced	Security	Power	Boot	**Exit**

The menu shown in Table 28 is used to exit the BIOS Setup program, saving changes, and loading and saving defaults.

Table 28. Exit Menu

Feature	Description
Exit Saving Changes	Exits and saves the changes in CMOS SRAM.
Exit Discarding Changes	Exits without saving any changes made in the BIOS Setup program.
Load Optimal Defaults	Loads optimal defaults.
Load Custom Defaults	Loads the custom defaults for Setup options.
Save Custom Defaults	Saves the current values as custom defaults. Normally, the BIOS reads the Setup values from flash memory. If this memory is corrupted, the BIOS reads the custom defaults. If no custom defaults are set, the BIOS reads the factory defaults.
Discard Changes	Discards changes without exiting Setup. The option values present when the computer was turned on are used.

5 Technical Reference

Board Connectors

The board connectors can be divided into three groups:

- Back panel connectors
- Midboard connectors
  - Audio connectors
  - Power and hardware connectors
  - Add-in board and peripheral interface connectors
- Front panel headers

⚠ **CAUTION**

Many of the midboard and front panel connectors provide operating voltage (+5 V dc and +12 V dc, for example) to devices inside the computer chassis, such as fans and internal peripherals. These connectors are not overcurrent protected. Do not use these connectors for powering devices external to the computer chassis. A fault in the load presented by the external devices could cause damage to the computer, the interconnecting cable, and the external devices themselves.

Back Panel Connectors

Figure 11 shows the back panel connectors.

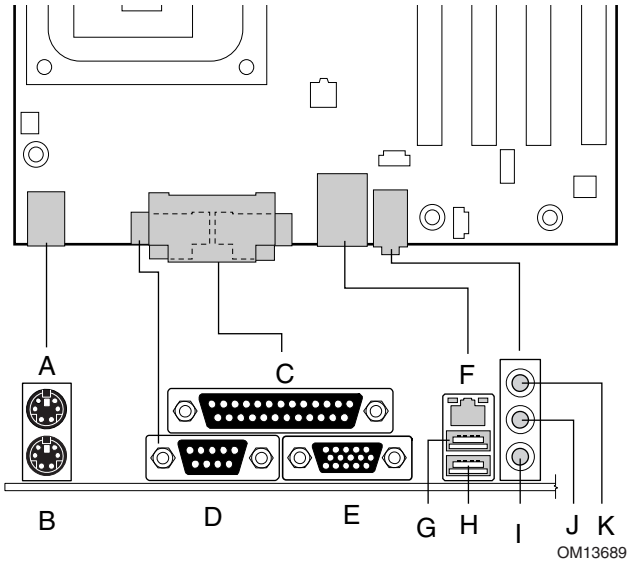

Item	Description	Color
A	PS/2 mouse port	Green
B	PS/2 keyboard port	Purple
C	Parallel port	Burgundy
D	Serial port A	Teal
E	VGA port	Blue
F	RJ-45 (optional)	Black
G	USB 2.0 port	Black
H	USB 2.0 port	Black
I	Mic in	Pink
J	Audio line out	Lime green
K	Audio line in	Light blue

Figure 11. Back Panel Connectors

NOTE

The line out connector, located on the back panel, is designed to power either headphones or amplified speakers only. Poor audio quality may occur if passive (non-amplified) speakers are connected to this output.

Midboard Connectors

Audio Connectors

Figure 12 shows the location of the audio connectors.

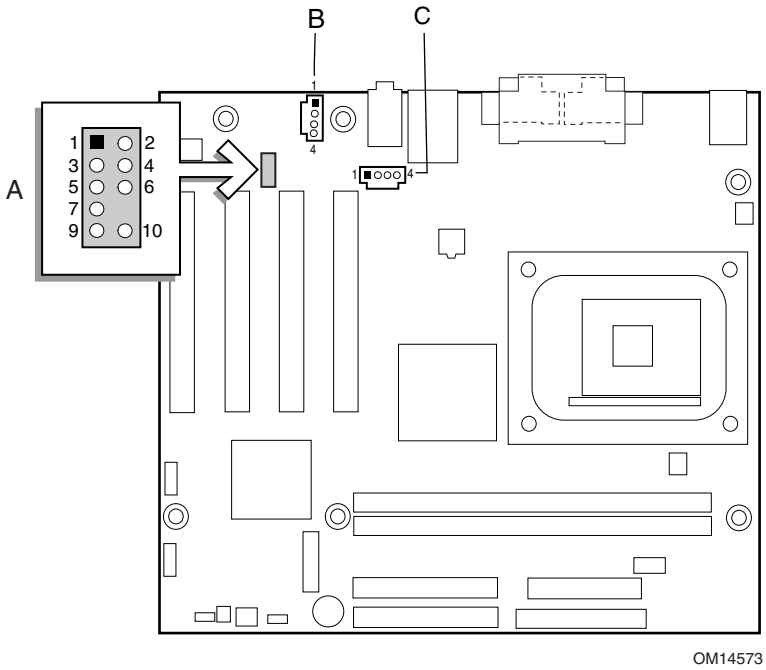

Item	Description	Color
A	Front panel audio (optional)	Black
B	Auxiliary line in (ATAPI)	Light grey
C	CD-ROM (ATAPI)	Black

Figure 12. Audio Connectors

Table 29 shows the pin assignments for the optional front panel audio header.

Table 29. Front Panel Audio Header Signal Names (J8A1)

Pin	Signal Name	Pin	Signal Name
1	AUD-MIC	2	AUD-GND
3	AUD-MIC-BIAS	4	AUD-VCC
5	AUD-FPOUT-R	6	AUD-RET-R
7	HP-ON	8	KEY
9	AUD-FPOUT-L	10	AUD-RET-L

Power and Hardware Connectors

CAUTION

Failure to use an ATX12V or SFX-12V power supply, or not connecting the additional power supply lead to Desktop Board D845GVAD2 may result in damage to the desktop board.

Desktop Board D845GVAD2 requires an ATX12V or SFX-12V compliant power supply to function according to desktop board specifications. The desktop board has two ATX12V or SFX_12V compliant power supply connectors that are needed to provide extra power to the Intel 845GV chipset and Pentium 4 processor.

Figure 13 shows the power and hardware connectors.

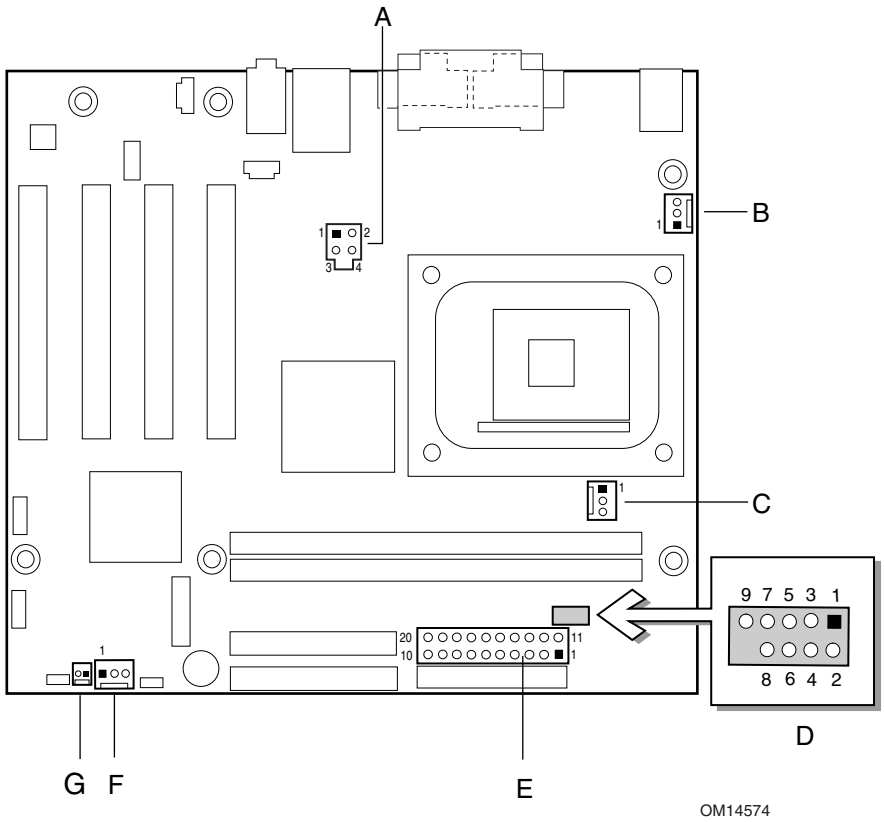

Item	Description	Item	Description
A	ATX12V or SFX-12V power	E	Main power
B	Rear chassis fan	F	Front chassis fan
C	Processor fan	G	Chassis intrusion
D	Serial port B header		

Figure 13. Power and Hardware Control Connectors

Add-In Card and Peripheral Interface Connectors

Figure 14 shows the add-in card and peripheral interface connectors.

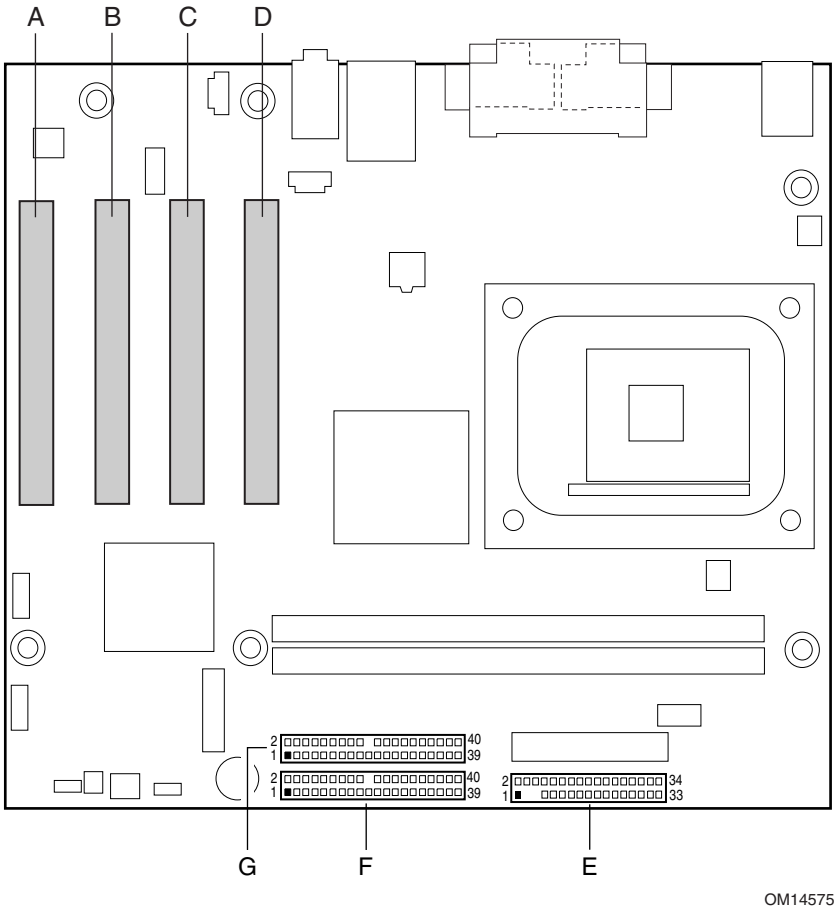

Item	Description	Item	Description
A	PCI bus connector 4	E	Floppy drive
B	PCI bus connector 3	F	Primary IDE
C	PCI bus connector 2 (SMBus routed)	G	Secondary IDE
D	PCI bus connector 1		

Figure 14. Add-in Card and Peripheral Interface Connectors

Front Panel Headers

Figure 15 shows the location of the front panel headers.

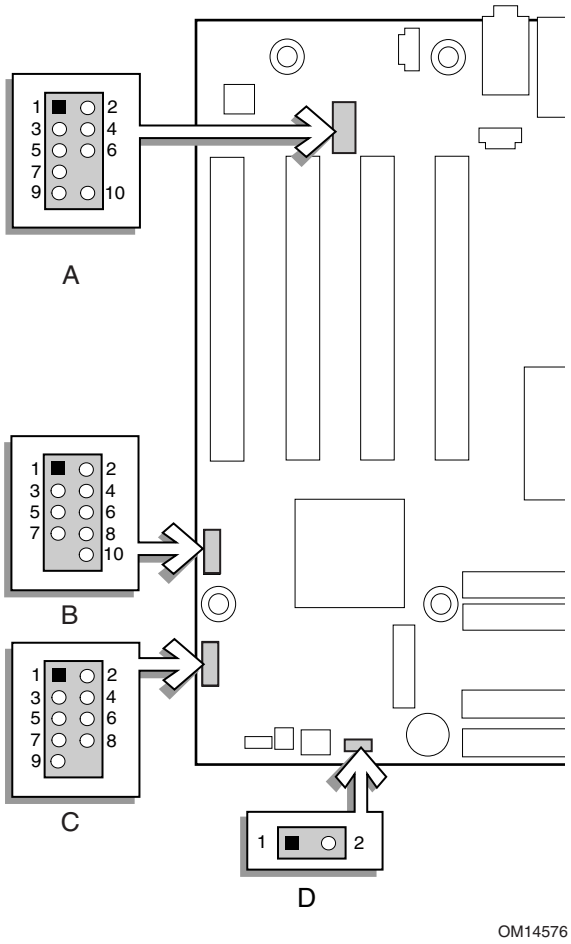

Item	Description
A	Front panel audio (optional) (see Table 29 on page 61 for pin assignments)
B	Front panel USB
C	Front panel
D	Alternate power/sleep LED

Figure 15. Front Panel Headers

See the next page for the tables showing the pin assignments for both the front panel USB 2.0 header and front panel header.

Table 30 shows the pin assignments for the front panel USB 2.0 header.

Table 30. Front Panel USB 2.0 Header (J9F2)

Pin	Signal name	Pin	Signal name
1	VREG_FP_WSBPWR0	2	VREG_FP_USBPWR0
3	USB_FPP0-	4	USB_FPP1-
5	USB_FPP0+	6	USB_FPP1+
7	Ground	8	Ground
9	Key	10	USB_FP_OC0

Note: USB ports may be assigned as needed.

Table 31 shows the pin assignments for the front panel header.

Table 31. Front Panel Header (J9G1)

Pin	Signal	In/Out	Description	Pin	Signal	In/Out	Description
Hard Drive Activity LED				**Power LED**			
1	HD_PWR	Out	Hard disk LED pull-up (330 Ω) to +5 V	2	HDR_BLNK_GRN	Out	Front panel green LED
3	HDA#	Out	Hard disk active LED	4	HDR_BLNK_YEL	Out	Front panel yellow LED
Reset Switch				**On/Off Switch**			
5	Ground		Ground	6	SWITCH_ON#	In	Power switch
7	FP_RESET#	In	Reset switch	8	Ground		Ground
9	+5 V	Out	Power	10	N/C		Not connected

Desktop Board Resources

Memory Map

Table 32. System Memory Map

Address Range (decimal)	Address Range (hex)	Size	Description
1024 K - 2097152 K	100000 - 7FFFFFF	2047 MB	Extended Memory
960 K - 1024 K	F0000 - FFFFF	64 KB	Runtime BIOS
896 K - 960 K	E0000 - EFFFF	64 KB	Reserved
800 K - 896 K	C8000 - DFFFF	96 KB	Available high DOS memory (open to the PCI bus)
640 K - 800 K	A0000 - C7FFF	160 KB	Video memory and BIOS
639 K - 640 K	9FC00 - 9FFFF	1 KB	Extended BIOS data (movable by memory manager software)
512 K - 639 K	80000 - 9FBFF	127 KB	Extended conventional memory
0 K - 512 K	00000 - 7FFFF	512 KB	Conventional memory

DMA Channels

Table 33. DMA Channels

DMA Channel Number	Data Width	System Resource
0	8 or 16 bits	
1	8 or 16 bits	Parallel port
2	8 or 16 bits	Diskette drive
3	8 or 16 bits	Parallel port (for ECP or EPP)
4	8 or 16 bits	DMA controller
5	16 bits	Open
6	16 bits	Open
7	16 bits	Open

Interrupts

Table 34. Interrupts

IRQ	System Resource
NMI	I/O channel check
0	Reserved, interval timer
1	Reserved, keyboard buffer full
2	Reserved, cascade interrupt from slave PIC
3	COM2*
4	COM1*
5	LPT2 (Plug & Play option) / **
6	Diskette drive controller
7	LPT1*
8	Real time clock
9	**
10	**
11	**
12	Onboard mouse port (if present, else user available)
13	Reserved, math coprocessor
14	Primary IDE (if present, else user available)
15	Secondary IDE (if present, else user available)

* Default, but can be changed to another IRQ.

** Dynamically allocated for all PCI/AGP devices and slots.

A Error Messages and Indicators

Desktop Board D845GVAD2 reports POST errors in two ways:

- By sounding a beep code
- By displaying an error message on the monitor

BIOS Beep Codes

The BIOS beep codes are listed in Table 35. The BIOS also issues a beep code (one long tone followed by two short tones) during POST if the video configuration fails (a faulty video card or no card installed) or if an external ROM module does not properly checksum to zero.

Table 35. Beep Codes

Number of Beeps	Description
1	Refresh failure
2	Parity cannot be reset
3	First 64 K memory failure
4	Timer not operational
5	Processor failure (Reserved; not used)
6	8042 GateA20 cannot be toggled (memory failure or not present)
7	Exception interrupt error
8	Display memory R/W error
9	(Reserved; not used)
10	CMOS Shutdown register test error
11	Invalid BIOS (such as, POST module not found)

BIOS Error Messages

When a recoverable error occurs during the POST, the BIOS displays an error message describing the problem.

Table 36. BIOS Error Messages

Error Message	Explanation
GA20 Error	An error occurred with Gate-A20 when switching to protected mode during the memory test.
Pri Master HDD Error Pri Slave HDD Error Sec Master HDD Error Sec Slave HDD Error	Could not read sector from corresponding drive.
Pri Master Drive - ATAPI Incompatible Pri Slave Drive - ATAPI Incompatible Sec Master Drive - ATAPI Incompatible Sec Slave Drive - ATAPI Incompatible	Corresponding drive is not an ATAPI device. Run Setup to make sure device is selected correctly.
A: Drive Error B: Drive Error	No response from the diskette drive.
CMOS Battery Low	The battery may be losing power. Replace the battery soon.
CMOS Display Type Wrong	The display type is different than what has been stored in CMOS. Check Setup to make sure type is correct.
CMOS Checksum Bad	The CMOS checksum is incorrect. CMOS memory may have been corrupted. Run Setup to reset values.
CMOS Settings Wrong	CMOS values are not the same as the last boot. These values have either been corrupted or the battery has failed.
CMOS Date/Time Not Set	The time and/or date values stored in CMOS are invalid. Run Setup to set correct values.
DMA Error	Error during read/write test of DMA controller.
FDC Failure	Error occurred trying to access diskette drive controller.
HDC Failure	Error occurred trying to access hard disk controller.
Checking NVRAM.....	NVRAM is being checked to see if it is valid.
Update OK!	NVRAM was invalid and has been updated.
Updated Failed	NVRAM was invalid but was unable to be updated.
Keyboard Is Locked	The system keyboard lock is engaged. The system must be unlocked to continue to boot.
Keyboard Error	Error in the keyboard connection. Make sure keyboard is connected properly.
KB/Interface Error	Keyboard interface test failed.

continued

Table 36. BIOS Error Messages (continued)

Error Message	Explanation
Memory Size Decreased	Memory size has decreased since the last boot. If no memory was removed, then memory may be bad.
Memory Size Increased	Memory size has increased since the last boot. If no memory was added, there may be a problem with the system.
Memory Size Changed	Memory size has changed since the last boot. If no memory was added or removed, then memory may be bad.
No Boot Device Available	System did not find a device to boot.
Off Board Parity Error	A parity error occurred on an offboard card. This error is followed by an address.
On Board Parity Error	A parity error occurred in onboard memory. This error is followed by an address.
Parity Error	A parity error occurred in onboard memory at an unknown address.
NVRAM / CMOS / PASSWORD cleared by Jumper	NVRAM, CMOS, and passwords have been cleared. The system should be powered down and the jumper removed.
<CTRL_N> Pressed	CMOS is ignored and NVRAM is cleared. User must enter Setup.

B Regulatory Compliance

This appendix contains:

- Safety standards, electromagnetic compatibility (EMC) regulations, and product certification markings for Desktop Board D845GVAD2.
- Instructions and precautions for integrators who are installing the Intel desktop board in a chassis.

Safety Regulations

Desktop Board D845GVAD2 complies with the safety regulations stated in Table 37 when correctly installed in a compatible host system.

Table 37. Safety Regulations

Regulation	Title
CSA C22.2 No. 60950/ UL 60950, 3rd Edition, 2000	Bi-National Standard for Safety of Information Technology Equipment including Electrical Business Equipment. (USA and Canada)
EN 60950, 2nd Edition, 1992 (with Amendments 1, 2, 3, and 4)	The Standard for Safety of Information Technology Equipment including Electrical Business Equipment. (European Union)
IEC 60950, 2nd edition, 1991 (with Amendments 1, 2, 3, and 4)	The Standard for Safety of Information Technology Equipment including Electrical Business Equipment. (International)
EMKO-TSE (74-SEC) 207/94	Summary of Nordic deviations to EN 60950. (Norway, Sweden, Denmark, and Finland)

EMC Regulations

Desktop Board D845GVAD2 complies with the EMC regulations stated in Table 38 when correctly installed in a compatible host system.

Table 38. EMC Regulations

Regulation	Title
FCC Class B	Title 47 of the Code of Federal Regulations, Parts 2 and 15, Subpart B, Radio Frequency Devices. (USA)
ICES-003 (Class B)	Interference-Causing Equipment Standard, Digital Apparatus. (Canada)
EN55022: 1998 (Class B)	Limits and methods of measurement of Radio Interference Characteristics of Information Technology Equipment. (European Union)
EN55024: 1998	Information Technology Equipment – Immunity Characteristics Limits and methods of measurement. (European Union)
AS/NZS 3548 (Class B)	Australian Communications Authority, Standard for Electromagnetic Compatibility. (Australia and New Zealand)
CISPR 22, 3rd Edition, (Class B)	Limits and methods of measurement of Radio Disturbance Characteristics of Information Technology Equipment. (International)
CISPR 24: 1997	Information Technology Equipment – Immunity Characteristics – Limits and Methods of Measurement. (International)

Product Certification Markings

Desktop Board D845GVAD2 has the following product certification markings:

- UL joint US/Canada Recognized Component mark: consists of small c followed by a stylized backward UR and followed by a small US. Includes adjacent UL file number for Intel desktop boards: E210882 (component side).
- FCC Declaration of Conformity logo mark for Class B equipment; includes Intel name and model designation (solder side).
- CE mark: declaring compliance to European Union (EU) EMC directive (89/336/EEC) and Low Voltage directive (73/23/EEC) (component side).
- Australian Communications Authority (ACA) C-Tick mark: consists of a stylized C overlaid with a check (tick) mark (component side), followed by Intel supplier code number, N-232.
- Printed wiring board manufacturer's recognition mark: consists of a unique UL recognized manufacturer's logo, along with a flammability rating (94 V-0) (solder side).
- Battery "+ Side Up" marking: located on the component side of the board in close proximity to the battery holder.
- Korean MIC logo mark: denotes Korean EMC certification (component side). Additional certification information is provided below:
  1. Product Name (model)
  2. Certificate ID
  3. Applicant: Intel Korea Ltd.
  4. Date of manufacture as separate marking on product
  5. Manufacturer (country of origin)

Korean MIC logo mark for Desktop Board D845GVAD2

Installation Precautions

When you install and test the desktop board, observe all warnings and cautions in the installation instructions.

To avoid injury, be careful of:

- Sharp pins on connectors
- Sharp pins on printed circuit assemblies
- Rough edges and sharp corners on the chassis
- Hot components (like processors, voltage regulators, and heat sinks)
- Damage to wires that could cause a short circuit

Observe all warnings and cautions that instruct you to refer computer servicing to qualified technical personnel.

Installation Instructions

⚠ **CAUTION**

Follow these guidelines to meet safety and regulatory requirements when installing this board assembly.

Read and adhere to all of these instructions and the instructions supplied with the chassis and associated modules. If the instructions for the chassis are inconsistent with these instructions or the instructions for associated modules, contact the supplier's technical support to find out how you can ensure that your computer meets safety and regulatory requirements. If you do not follow these instructions and the instructions provided by chassis and module suppliers, you increase safety risk and the possibility of noncompliance with regional laws and regulations.

Ensure Electromagnetic Compatibility (EMC) Compliance

Before computer integration, make sure that the power supply and other modules or peripherals, as applicable, have passed Class B EMC testing and are marked accordingly.

In the installation instructions for the host chassis, power supply, and other modules pay close attention to the following:

- Product certifications or lack of certifications
- External I/O cable shielding and filtering
- Mounting, grounding, and bonding requirements
- Keying connectors when mating the wrong connectors could be hazardous

If the power supply and other modules or peripherals, as applicable, are not Class B EMC compliant before integration, then EMC testing is required on a representative sample of the newly completed computer.

Chassis and Component Certifications

Ensure that the chassis and certain components; such as the power supply, peripheral drives, wiring, and cables; are components certified for the country or market where used. Agency certification marks on the product are proof of certification. Typical product certifications include:

In Europe

The CE marking signifies compliance with all applicable European requirements. If the chassis and other components are not properly CE marked, a supplier's Declaration of Conformity statement to the European EMC directive and Low Voltage directive (as applicable), should be obtained. Additionally, other directives, such as the Radio and Telecommunications Terminal Equipment (R&TTE) directive may also apply depending on product features.

In the United States

A certification mark by a Nationally Recognized Testing Laboratory (NRTL) such as UL, CSA, or ETL signifies compliance with safety requirements. Wiring and cables must also be UL listed or recognized and suitable for the intended use. The FCC Class B logo for home or office use signifies compliance with electromagnetic interference (EMI) requirements.

In Canada

A nationally recognized certification mark such as CSA or cUL signifies compliance with safety requirements. The Industry Canada statement at the front of this product guide demonstrates compliance with Canadian EMC regulations. Industry Canada recognizes and accepts FCC certification as denoting compliance with national electromagnetic interference (emissions) requirements.

Prevent Power Supply Overload

Do not overload the power supply output. To avoid overloading the power supply, make sure that the calculated total current loads of all the modules within the computer is less than the output current rating of each of the power supplies output circuits.

Place Battery Marking

There is insufficient space on this desktop board to provide instructions for replacing and disposing of the Lithium ion coin cell battery. For system safety certification, the following statement or equivalent statement is required to be permanently and legibly marked on the chassis near the battery.

⚠ **CAUTION**

Risk of explosion if battery is incorrectly replaced.

Replace with only the same or equivalent type recommended by the manufacturer. Dispose of used batteries according to the manufacturer's instructions.

Use Only for Intended Applications

All Intel desktop processor boards are evaluated as Information Technology Equipment (I.T.E.) for use in personal computers for installation in homes, offices, schools, computer rooms, and similar locations. The suitability of this product for other applications or environments, such as medical, industrial, alarm systems, test equipment, etc. may require further evaluation.