Intel® 7500 Chipset

Datasheet

March 2010

Reference Number: 322827-001

THIS SPECIFICATION IS PROVIDED “AS IS” WITH NO WARRANTIES WHATSOEVER, INCLUDING ANY WARRANTY OF MERCHANTABILITY, NONINFRINGEMENT, FITNESS FOR ANY PARTICULAR PURPOSE, OR ANY WARRANTY OTHERWISE ARISING OUT OF ANY PROPOSAL, SPECIFICATION OR SAMPLE. Intel disclaims all liability, including liability for infringement of any proprietary rights, relating to use of information in this specification. No license, express or implied, by estoppel or otherwise, to any intellectual property rights is granted herein.

INFORMATION IN THIS DOCUMENT IS PROVIDED IN CONNECTION WITH INTEL® PRODUCTS. NO LICENSE, EXPRESS OR IMPLIED, BY ESTOPPEL OR OTHERWISE, TO ANY INTELLECTUAL PROPERTY RIGHTS IS GRANTED BY THIS DOCUMENT. EXCEPT AS PROVIDED IN INTEL'S TERMS AND CONDITIONS OF SALE FOR SUCH PRODUCTS, INTEL ASSUMES NO LIABILITY WHATSOEVER, AND INTEL DISCLAIMS ANY EXPRESS OR IMPLIED WARRANTY, RELATING TO SALE AND/OR USE OF INTEL PRODUCTS INCLUDING LIABILITY OR WARRANTIES RELATING TO FITNESS FOR A PARTICULAR PURPOSE, MERCHANTABILITY, OR INFRINGEMENT OF ANY PATENT, COPYRIGHT OR OTHER INTELLECTUAL PROPERTY RIGHT. Intel products are not intended for use in medical, life saving, life sustaining, critical control or safety systems, or in nuclear facility applications.

Intel may make changes to specifications and product descriptions at any time, without notice.

Designers must not rely on the absence or characteristics of any features or instructions marked “reserved” or “undefined.” Intel reserves these for future definition and shall have no responsibility whatsoever for conflicts or incompatibilities arising from future changes to them.

The Intel® 7500 chipset and Intel® Itanium® processor 9300 series, ICH9/ICH10, Intel® Xeon® processor 7500 series-based platform and Intel Itanium processor 9300 series-based platforms may contain design defects or errors known as errata which may cause the product to deviate from published specifications. Current characterized errata are available on request.

Contact your local Intel sales office or your distributor to obtain the latest specifications and before placing your product order.

Intel® Virtualization Technology requires a computer system with an enabled Intel® processor, BIOS, virtual machine monitor (VMM) and, for some uses, certain computer system software enabled for it. Functionality, performance or other benefits will vary depending on hardware and software configurations and may require a BIOS update. Software applications may not be compatible with all operating systems. Please check with your application vendor.

No computer system can provide absolute security under all conditions. Intel® Trusted Execution Technology (Intel® TXT) requires a computer system with Intel® Virtualization Technology, an Intel TXT-enabled processor, chipset, BIOS, Authenticated Code Modules and an Intel TXT-compatible measured launched environment (MLE). The MLE could consist of a virtual machine monitor, an OS or an application. In addition, Intel TXT requires the system to contain a TPM v1.2, as defined by the Trusted Computing Group and specific software for some uses. For more information, see http://www.intel.com/technology/security/.

Copies of documents which have an order number and are referenced in this document, or other Intel literature, may be obtained by calling 1-800-548-4725, or by visiting Intel's Web Site.

Intel, Xeon, Itanium, and the Intel logo are trademarks of Intel Corporation in the United States and other countries.

*Other names and brands may be claimed as the property of others.

Copyright © 2010, Intel Corporation.

Contents

1 Introduction 19
1.1 System Configuration Overview 19
1.2 Feature Summary 19
1.2.1 Features By Segment based on PCI Express Ports 20
1.2.2 Non-Legacy IOH 21
1.2.3 Intel® QuickPath Interconnect Features 21
1.2.4 PCI Express* Features 21
1.2.5 Enterprise South Bridge Interface (ESI) Features 21
1.2.6 Controller Link (CL) 22
1.2.7 Intel® I/OAT Gen3 22
1.2.8 Intel® Virtualization Technology for Directed I/O (Intel® VT-d), Second Revision 22
1.2.9 Reliability, Availability, Serviceability (RAS) Features 22
1.2.10 Power Management Support 23
1.2.11 Security 23
1.2.12 Other 23
1.3 Terminology 23
1.4 Related Documents 26
2 Platform Topology 27
2.1 Introduction 27
2.2 IOH Supported Topologies 27
2.2.1 Platform Topologies 27
2.3 I/O Sub-System 30
3 Interfaces 33
3.1 Introduction 33
3.2 Intel® QuickPath Interconnect 33
3.2.1 Physical Layer 33
3.2.2 Link Layer 35
3.2.3 Routing Layer 35
3.2.4 Protocol Layer 35
3.3 PCI Express* Interface 38
3.3.1 Gen1/Gen2 Support 38
3.3.2 PCI Express* Link Characteristics - Link Training, Bifurcation, and Lane Reversal Support 38
3.3.3 Degraded Mode 39
3.3.4 Lane Reversal 40
3.3.5 Form-Factor Support 40
3.3.6 IOH Performance Policies 40
3.3.7 Address Translation Caching (ATC) 42
3.3.8 PCI Express* RAS 42
3.3.9 Power Management 43
3.4 Enterprise South Bridge Interface (ESI) 43
3.4.1 Interface Speed and Bandwidth 43
3.4.2 Supported Widths 43
3.4.3 Performance Policies on ESI 44
3.4.4 Error Handling 44
3.5 Reduced Media Independent Interface (RMII) 44
3.6 Control Link (CLink) Interface 44
3.7 System Management Bus (SMBus) 44
3.7.1 SMBus Physical Layer 45
3.7.2 SMBus Supported Transactions 45
3.7.3 Addressing 46

3.7.4 SMBus Initiated Southbound Configuration Cycles 47
3.7.5 SMBus Error Handling....48
3.7.6 SMBus Interface Reset 48
3.7.7 Configuration and Memory Read Protocol 49
3.8 JTAG Test Access Port Interface....54
3.8.1 JTAG Configuration Register Access....54
3.8.2 JTAG Initiated Southbound Configuration Cycles 56
3.8.3 Error Conditions 57
4 Intel® QuickPath Interconnect....59
4.1 Introduction....59
4.2 Physical Layer 59
4.2.1 Supported Frequencies 60
4.2.2 Supported Widths 60
4.2.3 Initialization / Re-initialization 60
4.3 Link Layer....60
4.3.1 Link Layer Initialization....61
4.3.2 Initialization....62
4.3.3 Packet Framing 62
4.3.4 Sending Credit Counter 62
4.3.5 Retry Queue Depth 63
4.3.6 Receiving Queue....63
4.3.7 Link Error Protection 63
4.3.8 Message Class....64
4.3.9 Link Level Credit Return Policy....64
4.3.10 Ordering Requirements....64
4.4 Routing Layer....65
4.4.1 Outbound Routing....65
4.5 Protocol Layer 65
4.5.1 NodeID Assignment 66
4.5.2 Source Address Decoder (SAD)....67
4.5.3 Special Response Status 70
4.5.4 Abort Time-out....70
4.5.5 Illegal Completion/Response/Request 70
4.5.6 Inbound Coherent Transactions 71
4.5.7 Inbound Non-Coherent Transactions....72
4.5.8 Outbound Snoops 73
4.5.9 Outbound Non-Coherent 74
4.6 Profile Support 76
4.7 Lock Arbiter 77
4.7.1 Lock Arbiter Time-Out 80
4.8 Write Cache 80
4.8.1 Write Cache Depth....80
4.8.2 Coherent Write Flow....80
4.8.3 Cache State 81
4.8.4 System Directory Support....81
4.9 Outgoing Request Buffer (ORB) 81
4.9.1 ORB Depth....81
4.9.2 Requestor Transaction ID (RTID) 82
4.9.3 Time-Out Counter....82
4.10 Conflict Handling 83
4.10.1 Coherent Local-Local Conflicts 83
4.10.2 Coherent Remote-Local Conflicts....85
4.10.3 Resource Conflicts 86
4.11 Deadlock Avoidance 86
4.11.1 Protocol Channel Dependence....86

5 PCI Express* and ESI Interfaces 87
5.1 Introduction 87
5.2 PCI Express* Link Characteristics - Link Training, Bifurcation, Downgrading and Lane Reversal Support 87
5.2.1 Link Training 87
5.2.2 Port Bifurcation 87
5.2.3 Degraded Mode 88
5.2.4 Lane Reversal 89
5.2.5 PCI Express* Gen1/Gen2 Speed Selection 89
5.2.6 Form-Factor Support 89
5.3 IOH Performance Policies 89
5.3.1 Max_Payload_size 89
5.3.2 Isochronous Support and Virtual Channels 90
5.3.3 Non-Coherent Transaction Support 90
5.3.4 Completion Policy 90
5.3.5 Read Prefetching Policies 90
5.3.6 Error Reporting 91
5.3.7 Intel Chipset-Specific Vendor-Defined Messages 91
5.4 Inbound Transactions 91
5.4.1 Inbound Memory, I/O and Configuration Transactions Supported 91
5.4.2 Configuration Retry Completions 92
5.4.3 Inbound PCI Express Messages Supported 93
5.5 Outbound Transactions 93
5.5.1 Memory, I/O and Configuration Transactions Supported 93
5.5.2 Lock Support 94
5.5.3 Outbound Messages Supported 94
5.6 32-/64-Bit Addressing 95
5.7 Transaction Descriptor 95
5.7.1 Transaction ID 96
5.7.2 Attributes 97
5.7.3 Traffic Class 97
5.8 Completer ID 97
5.9 Miscellaneous Information 98
5.9.1 Number of Outbound Non-Posted Requests 98
5.9.2 MSIs Generated from Root Ports and Locks 98
5.9.3 Completions for Locked Read Requests 98
5.10 PCI Express RAS 98
5.10.1 ECRC Support 98
5.10.2 Completion Time-Out 98
5.10.3 Data Poisoning 99
5.10.4 Role-Based Error Reporting 99
5.11 Link Layer Specifics 99
5.11.1 Ack/Nak 99
5.11.2 Link Level Retry 100
5.11.3 Ack Time-Out 100
5.11.4 Flow Control 100
5.12 Power Management 102
5.13 Enterprise South Bridge Interface (ESI) 102
5.13.1 ESI Port as a PCI Express Gen1 Port 102
5.13.2 Configuration Retry Completion 102
5.13.3 Inbound Transactions 102
5.13.4 Outbound Transactions 103
5.13.5 64-Bit Addressing 106
5.13.6 Transaction Descriptor 106
5.13.7 Completer ID 108
5.14 Flow Control Credits Advertised on ESI 108

6 Ordering 109
6.1 Introduction 109
6.2 Inbound Ordering Rules 110
6.2.1 Inbound Ordering Requirements 110
6.2.2 Special Ordering Relaxations 111
6.3 Outbound Ordering Rules 111
6.3.1 Outbound Ordering Requirements 112
6.3.2 Hinted Peer-to-Peer 112
6.3.3 Local Peer-to-Peer 112
6.4 Interrupt Ordering Rules 113
6.4.1 SpcEOI Ordering 113
6.4.2 SpcINTA Ordering 113
6.5 Configuration Register Ordering Rules 113
6.6 Intel® Virtualization Technology (Intel® VT) for Directed I/O (Intel® VT-d) Ordering Exceptions 114
7 System Address Map 115
7.1 Memory Address Space 115
7.1.1 System DRAM Memory Regions 117
7.1.2 VGA/SMM and Legacy C/D/E/F Regions 117
7.1.3 Address Region Between 1 MB and TOLM 119
7.1.4 Address Region from TOLM to 4 GB 119
7.1.5 Address Regions above 4 GB 122
7.1.6 Protected System DRAM Regions 123
7.2 I/O Address Space 124
7.2.1 VGA I/O Addresses 124
7.2.2 ISA Addresses 124
7.2.3 CFC/CF8 Addresses 124
7.2.4 PCI Express Device I/O Addresses 125
7.3 Configuration/CSR Space 125
7.3.1 PCI Express Configuration Space 125
7.3.2 Processor CSR Space 125
7.4 IOH Address Map Notes 125
7.4.1 Memory Recovery 125
7.4.2 Non-Coherent Address Space 126
7.5 IOH Address Decoding 126
7.5.1 Outbound Address Decoding 126
7.5.2 Inbound Address Decoding 129
7.6 Intel VT-d Address Map Implications 133
8 Interrupts 135
8.1 Overview 135
8.2 Legacy PCI Interrupt Handling 135
8.2.1 Summary of PCI Express INTx Message Routing 136
8.2.2 Integrated I/OxAPIC 137
8.2.3 PCI Express INTx Message Ordering 139
8.2.4 INTR_Ack/INTR_Ack_Reply Messages 140
8.3 MSI 140
8.3.1 Interrupt Remapping 142
8.3.2 MSI Forwarding: IA-32 Processor-based Platform 143
8.3.3 MSI Forwarding: Intel Itanium Processor 9300 Series Based Platform 149
8.3.4 External I/OxAPIC Support 150
8.4 Virtual Legacy Wires 150
8.5 Platform Interrupts 151
8.5.1 GPE Events 151
8.5.2 PMI/SMI/NMI/MCA/INIT 153
8.5.3 CPEI 154

9 System Manageability 155
9.1 Introduction 155
9.2 Error Status and Logging 155
9.3 Component Stepping Information 155
9.4 Intel® Interconnect Built-In Self Test 155
9.5 Hot-Plug Status Access 155
9.6 Link Status Indication 155
9.7 Thermal Sensor 156
10 Power Management 157
10.1 Introduction 157
10.2 Supported Processor Power States 158
10.3 Supported System Power States 158
10.3.1 Supported Performance States 159
10.3.2 Supported Device Power States 159
10.3.3 Supported ESI Power States 160
10.4 Intel® QuickData Technology Power Management 160
10.4.1 Power Management with Assistance from OS Level Software 160
10.5 Device and Slot Power Limits 161
10.5.1 ESI Power Management 161
10.6 PCI Express Interface Power Management Support 162
10.6.1 Power Management Messages 163
10.7 Other Power Management Features 163
10.7.1 Fine-Grained Dynamic Clock Gating 163
10.7.2 Core Power Domains 163
10.7.3 L0s on Intel QuickPath Interconnect and PCIe 163
10.7.4 L1 on Intel QuickPath Interconnect and PCIe 164
10.7.5 Static Clock Gating 164
11 Partitioning 165
11.1 Partitioning Overview 165
11.1.1 Types of Partitioning 165
11.1.2 Configuration of Partition – Static & Dynamic 167
11.2 Hard Partitioning 168
11.2.1 Hard Partitioning Topologies 169
11.3 Virtual Partitioning 173
11.4 Hard Partition System Address Model 173
11.5 IOH Partitioning Support 173
11.5.1 Considerations for Multiple ICHs in a Partition 174
12 Scalable Systems 175
12.1 Introduction 175
12.2 Intel QuickPath Interconnect Standard and Extended Headers 175
12.3 Broadcast from IOH 175
12.3.1 Coherent 175
12.3.2 Non-Coherent (IA-32 Only) 176
12.3.3 Lock Arbiter (IA-32 Only) 176
12.3.4 Quiesce Master 176
12.4 Source Address Decoder 176
12.5 Performance 177
12.6 Time-Out 177
12.7 PCI Segments 177
12.8 Flat System Configurations 177
12.9 Hierarchical System Configurations 179
13 Intel® Management Engine 181
13.1 Intel Management Engine Overview 181

13.2 Management Engine External Interaction 181
13.2.1 Receive 181
13.2.2 Transmit 181
13.3 Controller Link (CLINK) 183
13.4 MESW Register 183
13.4.1 MESW_CBM_OVR_CTRL: Config Busmaster Override Control 183
14 Reset 185
14.1 Introduction 185
14.1.1 Reset Types 185
14.1.2 Reset Triggers 187
14.1.3 Trigger and Reset Type Association 187
14.1.4 Domain Behavior 188
14.1.5 Reset Sequences 189
14.1.6 Intel QuickPath Interconnect Reset 191
14.2 Platform Signal Routing Diagram 194
14.3 Platform Timing Diagrams 195
15 Component Clocking 201
15.1 Component Specification 201
15.1.1 Reference Clocks 201
15.1.2 JTAG 201
15.1.3 SMBus 201
15.1.4 Hot-Plug Serial Buses 201
15.1.5 RMII Bus 202
15.1.6 CLINK Bus 202
15.1.7 Intel Management Engine Clock 202
15.1.8 Clock Pin Descriptions 202
15.1.9 High Frequency Clocking Support 203
15.2 Miscellaneous Requirements and Limitations 204
16 Reliability, Availability, Serviceability (RAS) 205
16.1 RAS Overview 205
16.2 System Level RAS 206
16.2.1 Boot Processor 206
16.2.2 Inband System Management 206
16.2.3 Outband System Management 206
16.2.4 Dynamic Partitioning 207
16.3 IOH RAS Support 207
16.4 IOH Error Reporting 207
16.4.1 Error Severity Classification 209
16.4.2 Inband Error Reporting 210
16.4.3 IOH Error Registers Overview 215
16.4.4 Error Logging Summary 223
16.5 Intel QuickPath Interconnect Interface RAS 227
16.5.1 Link Level CRC and Retry 227
16.5.2 Intel QuickPath Interconnect Error Detection, Logging, and Reporting 228
16.6 PCI Express RAS 228
16.6.1 PCI Express* Link CRC and Retry 228
16.6.2 Link Retraining and Recovery 229
16.6.3 PCI Express Error Reporting Mechanism 229
16.7 IOH Error Handling Summary 231
16.8 IOH PCIe Hot Add/Remove Support 244
16.8.1 Hot Add/Remove Rules 245
16.8.2 PCI Express Hot-Plug 245
16.9 Virtual Pin Ports (VPP) 249
16.10 Operation 249
16.10.1 Intel QuickPath Interconnect Hot-Plug 251

16.10.2 IOH Hot-plug 253
16.10.3 SMBus and Memory Hot-plug 253
17 Intel® Trusted Execution Technology 255
17.1 Introduction 255
18 Intel® Virtualization Technology 257
18.1 Introduction 257
18.2 Intel VT-d 257
18.3 Intel VT-d2 Features 257
18.4 Other Virtualization Features Supported 258
19 Signal List 259
19.1 Conventions 259
19.2 Signal List 260
19.3 PCI Express Width Strapping 267
19.4 IOH Signal Strappings 268
20 DC Electrical Specifications 271
20.1 DC Characteristics 271
20.2 PCI Express* / ESI Interface DC Characteristics 272
20.3 Miscellaneous DC Characteristics 273
21 Configuration Register Space 277
21.1 Device Mapping: Functions Specially Routed by the IOH 277
21.2 Unimplemented Devices/Functions and Registers 278
21.2.1 Register Attribute Definition 278
21.3 RID Implementation in IOH 280
21.3.1 Background 280
21.3.2 Stepping Revision ID (SRID) 280
21.3.3 Conceptual Description 280
21.4 Standard PCI Configuration Space (0x0 to 0x3F) - Type 0/1 Common Configuration Space 281
21.4.1 Configuration Register Map 281
21.4.2 Register Definitions - Common 282
21.4.3 Register Definitions - Extended Config Space 291
21.5 IOxAPIC Controller 312
21.5.1 PCICMD: PCI Command Register (Dev #19) 313
21.5.2 PCISTS: PCI Status Register (Dev #19) 315
21.5.3 MBAR: IOxAPIC Base Address Register 316
21.5.4 ABAR: I/OxAPIC Alternate BAR 317
21.5.5 PMCAP: Power Management Capabilities Register 317
21.5.6 PMCSR: Power Management Control and Status Register 318
21.5.7 RDINDEX: Alternate Index to read Indirect I/OxAPIC Registers 319
21.5.8 RDWINDOW: Alternate Window to read Indirect I/OxAPIC Registers 320
21.5.9 IOAPICTETPC: IOxAPIC Table Entry Target Programmable Control 320
21.5.10 MBAR: IOxAPIC Base Address Register 321
21.5.11 ABAR: I/OxAPIC Alternate BAR 322
21.5.12 PMCAP: Power Management Capabilities Register 322
21.5.13 PMCSR: Power Management Control and Status Register 323
21.5.14 RDINDEX: Alternate Index to read Indirect I/OxAPIC Registers 324
21.5.15 RDWINDOW: Alternate Window to read Indirect I/OxAPIC Registers 325
21.5.16 IOAPICTETPC: IOxAPIC Table Entry Target Programmable Control 325
21.5.17 I/OxAPIC Memory Mapped Registers 326
21.5.18 Index Register 327
21.5.19 Window Register 328
21.5.20 PAR Register 328
21.5.21 EOI Register 328
21.5.22 APICID 329
21.5.23 Version 329

21.5.24 ARBID 330
21.5.25 BCFG 330
21.5.26 RTL[0:23]: Redirection Table Low DWORD 330
21.5.27 RTH[0:23]: Redirection Table High DWORD 332
21.6 Intel® VT, Address Mapping, System Management, Device Hide, Misc 333
21.6.1 GENPROTRANGE0.BASE: Generic Protected Memory Range 0 Base Address Register 335
21.6.2 GENPROTRANGE0.LIMIT: Generic Protected Memory Range 0 Limit Address Register 335
21.6.3 IOHMISCCTRL: IOH MISC Control Register 336
21.6.4 IOHMISCSS: IOH MISC Status 337
21.6.5 IOH System Management Registers 338
21.6.6 Semaphore and Scratch Pad Registers (Dev20, Function 1) 362
21.6.7 IOH System/Control Status Registers 369
21.7 Global Error Registers 385
21.7.1 Global Error Registers 386
21.8 IOH Local Error Registers 395
21.8.1 IOH Local Error Register 398
21.8.2 IOHERRST: IOH Core Error Status Register 409
21.8.3 THRERRST: Thermal Error Status 414
21.8.4 MIERRST: Miscellaneous Error Status 417
21.8.5 QPI[1:0]FERRFLIT0: Intel QuickPath Interconnect FERR FLIT log Register 0 421
21.9 On-Die Throttling Register Map and Coarse-Grained Clock Gating 423
21.9.1 On-Die Throttling Registers 424
21.10 Intel QuickPath Interconnect Register Map 428
21.11 Intel QuickPath Interconnect Link Layer Registers 429
21.11.1 Intel QuickPath Interconnect Link Layer Register Tables 430
21.11.2 Intel QuickPath Interconnect Routing and Protocol Layer Registers 440
21.11.3 Intel QuickPath Interconnect Physical Layer Registers 466
21.12 PCI Express, ESI Configuration Space Registers 474
21.12.1 Other Register Notes 474
21.12.2 Standard PCI Configuration Space (0x0 to 0x3F) - Type 0/1 Common Configuration Space 482
21.12.3 Standard PCI Configuration Space (0x0 to 0x3F) - Type 1 - Only Common Configuration Space 491
21.12.4 Device-Specific PCI Configuration Space - 0x40 to 0xFF 498
21.12.5 PCI Express Enhanced Configuration Space 525
21.12.6 XP Common Block Link Control Registers 545
21.13 IOH Defined PCI Express Error Registers 547
21.13.1 XPCORERRSTS - XP Correctable Error Status Register 547
21.13.2 XPCORERRMSK - XP Correctable Error Mask Register 547
21.13.3 XPUNCERRSTS - XP Uncorrectable Error Status Register 548
21.13.4 XPUNCERRMSK - XP Uncorrectable Error Mask Register 548
21.13.5 XPUNCERRSEV - XP Uncorrectable Error Severity Register 549
21.13.6 XPGLBERRSTS - XP Global Error Status Register 552
21.13.7 XPGLBERRPTR - XP Global Error Pointer Register 552
21.13.8 CTOCTRL: Completion Time-Out Control Register 553
21.13.9 PCIE_LER_SS_CTRLSTS: PCI Express Live Error Recovery/Stop and Scream Control and Status Register 553
21.13.10 XP[10:0]ERRCNTSEL: Error Counter Selection Register 554
21.13.11 XP[10:0]ERRCNT: Error Counter Register 555
21.14 Intel VT-d Memory Mapped Register 555
21.14.1 Intel VT-d Memory Mapped Registers 558
22 Ballout and Package Information 573
22.1 I/O Hub (IOH) Ballout 573

22.2 IOH Pin List and Ballout 574
22.3 Package Information 614

Figures

1-1 IOH High-Level Block Diagram 20
2-1 4-Socket 2-IOH MP Topology 28
2-2 2-Socket 2-IOH Topology 28
2-3 8-Socket Glueless MP Topology 29
2-4 Hard Partitioned MP Topology 30
2-5 Example Server Topology (For Reference Only) 31
3-1 PCI Express* Interface Partitioning 39
3-2 SMBus Block-Size Configuration Register Read 49
3-3 SMBus Block-Size Memory Register Read 50
3-4 SMBus Word-Size Configuration Register Read 50
3-5 SMBus Word-Size Memory Register Read 51
3-6 SMBus Byte-Size Configuration Register Read 51
3-7 SMBus Byte-Size Memory Register Read 52
3-8 SMBus Block-Size Configuration Register Write 53
3-9 SMBus Block-Size Memory Register Write 53
3-10 SMBus Word-Size Configuration Register Write 53
3-11 SMBus Word-Size Memory Register Write 53
3-12 SMBus Configuration Byte Write, PEC Enabled 54
3-13 SMBus Memory Byte Write, PEC Enabled 54
4-1 Intel® QuickPath Interconnect Packet Visibility By The Physical Layer (Phit) 59
4-2 Intel® QuickPath Interconnect Packet Visibility By Link Layer (Flit) 61
4-3 Example NodeID Assignment 4-Socket, 2-IOH Platform (For Intel Itanium Processor 9300 Series based Platform) 66
4-4 Lock Arbiter Issue/Control State-Machine 79
7-1 System Address Map 116
7-2 VGA/SMM and Legacy C/D/E/F Regions 117
7-3 Peer-to-Peer Illustration 130
8-1 Legacy Interrupt Routing Illustration (INTA Example) 136
8-2 Interrupt Transformation Table Entry (IRTE) 143
8-3 Assert/Deassert_(HP, PME) GPE Messages 152
8-4 Intel QuickPath Interconnect GPE Messages from Processor and DO_SCI Messages from IOH 153
10-1 ACPI Power States in G0 and G1 States 157
10-2 Typical Platform Showing Power Saving Signals to BMC 158
10-3 ICH Timing Diagram for S4,S5 Transition 162
11-1 Partition Type and Isolation/Flexibility Chart 166
11-2 Example of Hard Partitioning 169
11-3 Example of Dynamic Hard Partitioning Violation 170
11-4 Examples of Hard Partitioning in 2-CPU Systems 171
11-5 Examples of Hard Partitioning in Topology 4-2-F (4 CPU, 2 IOH) 172
11-6 Legal Hard Partitioning 172
12-1 Example NodeID Assignment for 2-Cluster System with 4S Clusters 175
12-2 8 Processor Topology Example 178
12-3 8 Processor Topology Example (Intel Itanium Processor 9300 Series-based Platform Only) 178
12-4 Hierarchical System Example 179
13-1 Example of Intel ME Configuration with Intel SPS Implementation 182
14-1 Physical Layer Power-Up and Initialization Sequence 192

14-2 Inband Reset Sequence Initiated by Port A to Port B 192
14-3 Basic Reset Distribution 194
14-4 Basic MP System Reset Distribution 194
14-5 Power-Up (example) 196
14-6 COREPWRGOOD Reset (example) 197
14-7 Hard Reset (Example) 198
14-8 IOH CORERST_N Re-Triggering Limitations 199
16-1 Error Signal Converted to Interrupt Example 208
16-2 Error Signal Converted to Error Pins Example 208
16-3 IOH Error Registers 216
16-4 Local Error Signaling on IOH Internal Errors 218
16-5 IOH Error Logging and Reporting Example 220
16-6 Global Error Logging and Reporting 221
16-7 Thermalert and Thermtrip Signaling 222
16-8 IOH Error Logging Flow 224
16-9 Clearing Global and Local FERR/NERR Registers 226
16-10 Error Signaling to IOH Global Error Logic on a PCI Express Interface Error 230
16-11 PCI Express Error Standard 231
16-12 PCI Express Hot-Plug Interrupt Flow 248
16-13 Intel QPI Hot Add/Remove Support 252
20-1 Differential Measurement Point for Rise and Fall Time 274
20-2 Differential Measurement Point for Ringback 275
21-1 PCI Express Root Port (Devices 1-10), ESI Port (Device 0) Type1 Configuration Space 475
21-2 Base Address of Intel VT-D Remap Engines 558
22-1 IOH Quadrant Map 573
22-2 IOH Ballout Left Side (Top View) 574
22-3 IOH Ballout Center Side (Top View) 576
22-4 IOH Ballout Right (Top View) 578
22-5 Package Diagram 614

Tables

1-1 High-Level Feature Summary 20
1-2 Terminology 23
1-3 Related Documents 26
3-1 Intel QuickPath Interconnect Frequency Strapping Options 34
3-2 Protocol Transactions Supported 36
3-3 Supported Degraded Modes 40
3-4 SMBus Command Encoding 45
3-5 Internal SMBus Protocol Stack 46
3-6 SMBus Slave Address Format 46
3-7 Memory Region Address Field 47
3-8 Status Field Encoding for SMBus Reads 48
3-9 Memory Region Address Field 55
3-10 JTAG Configuration Register Access 55
4-1 Link Layer Parameter Values 61
4-2 Credit Values Programming Example 63
4-3 Supported Intel QuickPath Interconnect Message Classes 64
4-4 Memory Address Decoder Fields 68
4-5 I/O Decoder Entries 69
4-6 Inbound Coherent Transactions and Responses 71

4-7 Non-Coherent Inbound Transactions Supported 72
4-8 Snoops Supported and State Transitions 74
4-9 Protocol Transactions Supported 74
4-10 Profile Control – Intel Xeon Processor 7500 Series based Platform Only 76
4-11 Profile Control – Intel Itanium Processor 9300 Series-based Platform Only 76
4-12 Lock Master Participant List Usage 79
4-13 Time-Out Level Classification for IOH 83
4-14 Local-Local Conflict Actions 84
4-15 Remote-Local Conflict Actions 85
4-16 Conflict Completions Actions 85
5-1 Supported Degraded Modes 89
5-2 Incoming PCI Express Memory, I/O and Configuration Request/Completion Cycles 91
5-3 Incoming PCI Express* Message Cycles 93
5-4 Outgoing PCI Express* Memory, I/O and Configuration Request/Completion Cycles 94
5-5 Outgoing PCI Express Message Cycles 94
5-6 PCI Express Transaction ID Handling 96
5-7 PCI Express Attribute Handling 97
5-8 PCI Express CompleterID Handling 97
5-9 PCI Express Credit Mapping for Inbound Transactions 100
5-10 PCI Express Credit Mapping for Outbound Transactions 101
5-11 Incoming ESI Memory, I/O and Configuration Requests/Completions 103
5-12 Incoming ESI Messages 103
5-13 Outgoing ESI Memory, I/O and Configuration Requests/Completions 104
5-14 Outgoing ESI Messages 104
5-15 ESI Transaction ID Handling 107
5-16 ESI Attribute Handling 107
5-17 ESI CompleterID Handling 108
5-18 ESI Credit Mapping 108
6-1 Ordering Term Definitions 109
7-1 Outbound Target Decoder Entries 128
7-2 Decoding of Outbound Memory Requests from Intel QuickPath Interconnect (from CPU or Remote Peer-to-Peer) 129
7-3 Subtractive Decoding of Outbound I/O Requests from Common System Interface 129
7-4 Inbound Memory Address Decoding 131
7-5 Inbound I/O Address Decoding 132
8-1 Interrupt Sources in I/OxAPIC Table Mapping 137
8-2 I/OxAPIC Table Mapping to PCI Express Interrupts 138
8-3 Programmable IOxAPIC Entry Target for Certain Interrupt Sources 138
8-4 MSI Address Format when Remapping is Disabled 141
8-5 MSI Data Format when Remapping Disabled 141
8-6 MSI Address Format when Remapping is Enabled 142
8-7 MSI Data Format when Remapping is Enabled 142
8-8 Interrupt Delivery 143
8-9 IA-32 Physical APICID to NodeID Mapping 144
8-10 IA-32 Interrupt Delivery Summary 147
8-11 Itanium® Processor Family Platform Interrupt Delivery 149
8-12 Intel Itanium Processor 9300 Series APICID to NodeID Mapping Example (Setup through QPIPAPICSAD Register) 150
9-1 Status Register Location Table 156
10-1 IOH Platform Supported System States 159

10-2 System and ESI Link Power States 160
13-1 Signal Type Definition 181
13-2 Controller Link Interface 183
14-1 Trigger and Reset Type Association 187
14-2 Intel QuickPath Interconnect Inband Reset Events 193
14-3 Core Power-Up, Core POWERGOOD, and Core Hard Reset Platform Timings 199
15-1 The Clock Options for a Intel ME and Non-Intel ME Configuration System 202
16-1 Clock Pins 202
16-1 Error Counter Register Locations 227
16-2 IOH Default Error Severity Map 232
16-3 IOH Error Summary 232
16-4 Hot-Plug Interface 246
16-5 I/O Port Registers in On-Board SMBus Devices Supported by IOH 249
16-6 Hot-Plug Signals on the Virtual Pin Port 250
16-7 Write Command 250
16-8 Read Command 251
19-1 Buffer Technology Types 259
19-2 Buffer Signal Directions 259
19-3 Signal Naming Conventions 260
19-4 JTAG Signals 260
19-5 Intel QuickPath Interconnect Signals 261
19-6 PCI Express Signals 261
19-7 Signals 262
19-8 MISC Signals 262
19-9 Controller Link Signals 264
19-10 RMII Signals 265
19-11 Power and Ground 265
19-12 PEWIDTH[5:0] Strapping Options 267
20-1 Clock DC Characteristics 271
20-2 PCI Express / ESI Differential Transmitter (Tx) Output DC Characteristics 272
20-3 PCI Express / ESI Differential Receiver (Rx) Input DC Characteristics 272
20-4 CMOS, JTAG, SMBUS, GPIO3.3V, and MISC DC Characteristics 273
21-1 Functions Specially Handled by the IOH 277
21-2 Register Attributes Definitions 278
21-3 PCIe Capability Registers for Devices with PCIe Extended Configuration Space 281
21-4 IOH Device 19 I/OxAPIC Configuration Map - Offset 0x00-0xFF 312
21-5 I/OxAPIC Direct Memory Mapped Registers 327
21-6 I/OxAPIC Indexed Registers (Redirection Table Entries) 329
21-7 Core Registers (Dev 20, Function 0) - Offset 0x00-0xFF 333
21-8 Core Registers (Dev 20, Function 0) 334
21-9 Semaphore and Scratch pad Registers (Dev 20, Function 1) 362
21-10 IOH Control/Status & Global Error Register Map (Dev 20, Function 2, Page 1 of 4) ... 369
21-11 IOH Control/Status & Global Error Register Map (Dev 20, Function 2, Page 2 of 4) ... 370
21-12 IOH Local Error Map #1 (Dev 20, Function 2, Page 3 of 4) 371
21-13 IOH Local Error Map #2 (Dev 20, Function 2, Page 4 of 4) 372
21-14 IOH Control/Status & Global Error Register Map (Dev 20, Function 2) 385
21-15 IOH Local Error Map #1 (Dev 20, Function 2) 395
21-16 IOH Local Error Map #2 (Dev 20, Function 2) 396
21-17 IOH Local Error Map #2 (Dev 20, Function 2, Page 4 of 4) 397
21-18 Device 20, Function 3: On-Die Throttling and Coarse-Grained Clock Gating 423
21-19 Intel QuickPath Interconnect Link Map Port 0 (Dev 16), Port 1 (Dev 17) 429
21-20 CSR Intel QPI Routing Layer, Protocol (Dev 16, Function 1) 440

21-21 QPIPH-Intel QuickPath Interconnect Tracking State Table 466
21-22 QPIPH-Intel QuickPath Interconnect Tracking State Table 470
21-23 IOH Device 0 (ESI mode) Configuration Map 476
21-24 IOH Device 0 (ESI mode) Extended Configuration Map 477
21-25 IOH Devices 0(ESI Mode) Configuration Map 478
21-26 IOH Devices 0(PCIe Mode)-10 Legacy Configuration Map
(PCI Express Registers) 479
21-27 IOH Devices 0(PCIe Mode)-10 Extended Configuration Map
(PCI Express Registers) Page#0 480
21-28 IOH Devices 0-10 Extended Configuration Map (PCI Express Registers) Page#1..... 481
21-29 MSI Vector Handling and Processing by IOH 502
21-30 Intel VT-d Memory Mapped Registers - 0x00 - 0xFF, 1000-10FF 555
21-31 Intel VT-d Memory Mapped Registers - 0x100 - 0x1FF, 0x1100-0x11FF 556
22-1 Pin Listing by Pin Name 580
22-2 Pin Listing by Signal Name 597

Revision History

Document Number	Revision Number	Description	Date
322827	-001	Initial Release	March 2010

§

Product Features

- **Processor**
  - Intel® Xeon® Processor 7500 Series
  - Intel® Itanium® Processor 9300 Series
- **Two Full-Width Intel® QuickPath Interconnect (Intel® QPI)**
  - Packetized protocol with 18 data/protocol bits and 2 CRC bits per link per direction
  - 4.8 GT/s, 5.86 GT/s, and 6.4 GT/s supporting different routing lengths
  - Fully-coherent write cache with inbound write combining
  - Read Current command support
  - Support for 64-byte cacheline size
- **PCI Express* Features**
  - Two x16 PCI Express* Gen2 ports each supporting up to 8 GB/s/direction peak bandwidth
  - All ports are configurable as two independent x8 or four independent x4 interfaces
  - An additional x4 PCI Express Gen2 port configurable to 2 x 2 interfaces
  - Dual unidirectional links
  - Supports PCI Express Gen1 and Gen2 transfer rates
  - Peer-to-peer support between PCI Express interfaces
  - Support for multiple unordered inbound traffic streams
  - Support for Relaxed Ordering attribute
  - Full support for software-initiated PCI Express power management
  - x8 Server I/O Module (SIOM) support
  - Alternative Requester ID (ARI) capability
- **Enterprise Southbridge Interface (ESI) Features**
  - One x4 ESI link interface supporting PCI Express Gen1 (2.5 Gbps) transfer rate
  - Intel® I/O Controller Hub (ICH) Support. Dedicated legacy bridge interface
- **Supports Controller Link (CL)**
- **Supports Intel® I/O Acceleration Technology (Intel® I/OAT) Gen3**
  - Includes previous generation Intel I/OAT features, focused on reduced latency and CPU utilization for I/O traffic
  - Increased bandwidth to support multiple 10 GbE links
  - Flow-through CRC
  - Virtualization friendly - Assignable channels, Inter/intra VM copy, page zeroing
- **Supports Intel® Virtualization Technology for Directed I/O (Intel VT-d), Second Revision**
- **Reliability, Availability, Serviceability (RAS)**
  - Supports SMBus Specification, Revision 2.0 slave interface for server management with Packet Error Checking
  - Improved RAS achieved by protecting internal data paths through ECC and parity protection mechanisms
  - Supports PCI Express Base Specification, Revision 2.0 CRC with link-level retry
  - Supports both standard and rolling Intel® QuickPath Interconnect CRC with link level retry
  - Advanced Error Reporting capability for PCI Express link interfaces
  - Native PCI Express Hot-Plug support
  - Error injection capabilities
  - Performance monitoring capabilities
  - Power Management
  - Intel QuickPath Interconnect hot-plug
- **Security**
  - TPM 1.2 and Intel VT-d
- **Package**
  - FC-BGA
  - 37.5 mm x 37.5 mm
  - 1295 balls
  - Full grid pattern

Note: Refer to Intel 7500 Chipset full specification and Intel 7500 Chipset specification update for further details.

§

1 Introduction

1.1 System Configuration Overview

The I/O Hub (IOH) component provides a connection point between various I/O components and Intel® QuickPath Interconnect based processors. platforms. Contact you local Intel representative for details on those processors.

For example topologies supported by the IOH, refer to Chapter 2, "Platform Topology."

This document is for the common feature sets as well as feature differences between the platforms. Throughout the document, platform-specific features will be identified and spelled out. It is important for the reader to clearly comprehend the feature deltas and platform implications associated with designing the IOH for system compatibility.

1.2 Feature Summary

The IOH provides the interface between the processor Intel QuickPath Interconnect and industry-standard PCI Express* components. The two Intel QuickPath Interconnect interfaces are full-width links (20 lanes in each direction). The two x16 PCI Express Gen2 ports are also configurable as x8 and x4 links compliant to the *PCI Express Base Specification,* Revision 2.0. The single x4 PCI Express Gen2 port can bifurcate into two independent x2 interfaces. In addition, the legacy IOH supports a x4 ESI link interface for the legacy bridge. For multiprocessor platforms, non-legacy IOHs also support an additional x4 PCI Express Gen1 interface. Refer to Figure 1-1 for a high-level view of the IOH and its interfaces. The IOH supports the following features and technologies:

- Intel® QuickPath Interconnect multiprocessor-small profile
- Intel® QuickPath Interconnect multiprocessor-enterprise profile (Intel® Itanium® processor 9300 series-based platforms)
  - Interface to CPU or other IOH (limited configurations)
- PCI Express Gen2
- Intel® I/O Accelerated Technology (Intel® I/OAT) Gen3 (updated DMA engine with virtualization enhancements)
- Intel® Management Engine (Intel® ME)

Figure 1-1. IOH High-Level Block Diagram

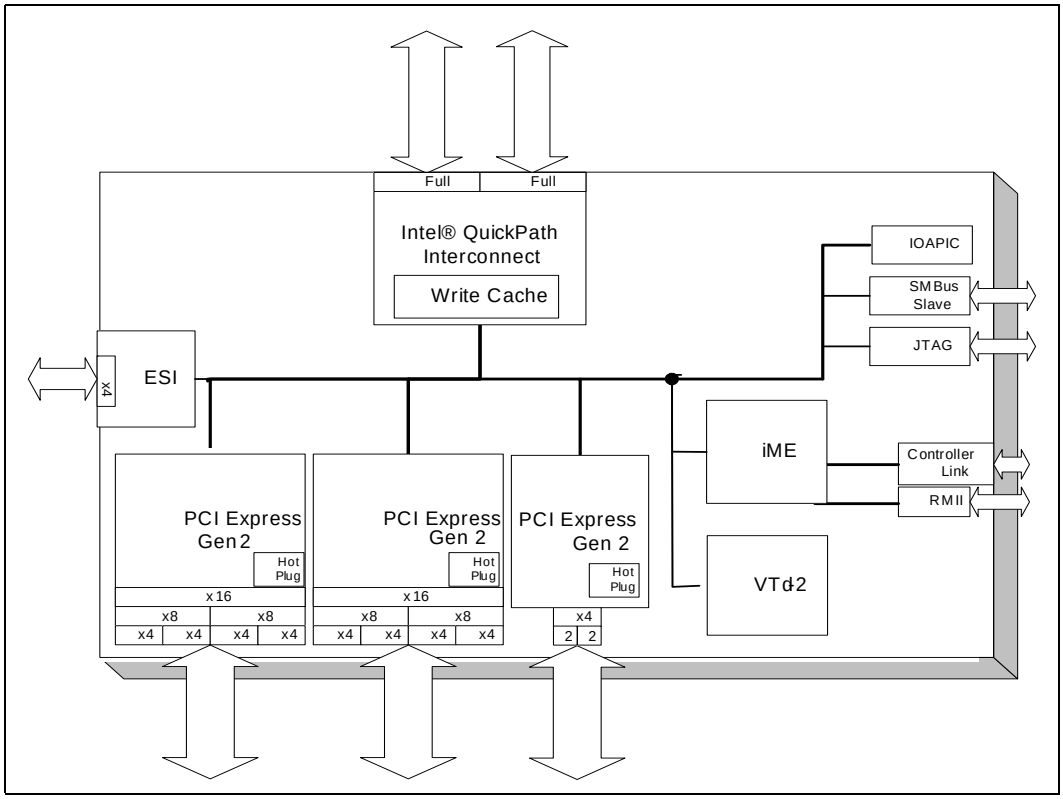

Note: The internal IOH interfaces are designed to communicate with each other. This communication is illustrated in the diagram above as a shared bus; however, this is a conceptual diagram and does not represent actual implementation and connectivity.

1.2.1 Features By Segment based on PCI Express Ports

The following table shows the features that will be supported for this chipset.

Table 1-1. High-Level Feature Summary

Sku	Intel® QPI Ports	PCIe* Lanes	Manageability
Multiprocessor Intel Xeon processor 7500 series server	2	36 lanes, 2x16's (bifurcatable to 4x8's or 8x4's), and 1x4	Node Manager
Intel Itanium processor 9300 series server	2	36 lanes, 2x16's (bifurcatable to 4x8's or 8x4's), and 1x4	

1.2.1.1 Addressability By Profile

The IOH supports MP addressability up to 46 bits for Intel Xeon processor 7500 series based platforms and 51 bits for Intel Itanium processor 9300 series-based platforms. Note that the CPU may further limit the addressability.

1.2.2 Non-Legacy IOH

For multiprocessor configurations where there is more than one IOH, one of the IOHs will be considered the legacy IOH. The legacy IOH will be connected to the ICH10 legacy component. For the remaining non-legacy IOHs, the ESI port to the ICH10 will be either configured as a Gen1 x4 PCIe* link, or treated as an ESI port that is disabled.

For additional details on configurations with more than one IOH, please refer to Chapter 2, "Platform Topology".

1.2.3 Intel® QuickPath Interconnect Features

- Two full-width Intel QuickPath Interconnect link interfaces:
- Packetized protocol with 18 data/protocol bits and 2 CRC bits per link per direction
  - Supporting 4.8 GT/s, 5.86 GT/s and 6.4 GT/s
- Fully-coherent write cache with inbound write combining
- Read Current command support
- Support for 64-byte cacheline size

1.2.4 PCI Express* Features

- Two x16 PCI Express* Gen2 ports each supporting up to 8 GB/s/direction peak bandwidth
  - All ports are configurable as two independent x8 or four independent x4 interfaces
- An additional x4 PCI Express Gen2 port configurable to 2 x2 interfaces
- An additional x4 PCI Express Gen1 port on non-legacy IOHs. This port is the ESI port on legacy IOHs
- Dual unidirectional links
- Supports PCI Express Gen1 and Gen2 transfer rates
- Peer-to-peer support between PCI Express interfaces
- Support for multiple unordered inbound traffic streams
- Support for Relaxed Ordering attribute
- Full support for software-initiated PCI Express power management
- x8 Server I/O Module (SIOM) support
- Alternative Requester ID (ARI) capability
- Auto negotiation is not a supported feature

1.2.5 Enterprise South Bridge Interface (ESI) Features

- One x4 ESI link interface supporting PCI Express Gen1 (2.5 Gbps) transfer rate
  - Dedicated legacy bridge (Intel® I/O Controller Hub (ICH)) interface
- ICH Support
- For non-legacy IOHs, this interface is configurable as a x4 Gen1 PCI Express port

1.2.6 Controller Link (CL)

The Controller Link is a private, low pin count, low power, communication interface between the IOH and ICH portions of the Manageability Engine subsystem.

1.2.7 Intel® I/OAT Gen3

- Includes previous generation Intel I/OAT features, focused on reduced latency and CPU utilization for I/O traffic
- Increased bandwidth to support multiple 10 GbE links
- Flow-through CRC
- Virtualization friendly
  - Assignable channels, Inter/intra VM copy, page zeroing

1.2.8 Intel® Virtualization Technology for Directed I/O (Intel® VT-d), Second Revision

- Builds upon first generation of Intel® Virtualization Technology (Intel® VT) for Directed I/O (Intel® VT-d) features
- Improved performance through better invalidation architecture
- Support for end-point Address Translation Caching (ATC) compliant with the PCI-SIG IOV *Address Translation Services (ATS), Revision 1.0* specification.
- Interrupt remapping
- Optimized translation of sequential accesses
- IOV support (ARI)

1.2.9 Reliability, Availability, Serviceability (RAS) Features

- Supports an *SMBus Specification*, Revision 2.0 slave interface for server management with Packet Error Checking:
  - SMBus and JTAG access to IOH configuration registers for out-of-band server management
- Improved RAS achieved by protecting internal datapaths through ECC and parity protection mechanisms
- Supports *PCI Express Base Specification,* Revision 2.0 CRC with link-level retry
- Supports both standard and rolling Intel QuickPath Interconnect CRC with link level retry
- Advanced Error Reporting capability for PCI Express link interfaces
- Native PCI Express Hot-Plug support
- Error injection capabilities
- Performance monitoring capabilities
- PCIe Live Error Recovery
- Intel QuickPath Interconnect hot-plug
- Support for quiescing and re-instantiation of Intel® QuickPath Interconnect links
- Machine Check Architecture (MCA) support
- OS-Assisted CPU migration

- Self Healing Intel QuickPath Interconnect links

1.2.10 Power Management Support

- PCI Express Link states (L0, L0s-tx only, L1, and L3)
- Intel QuickPath Interconnect Link states (L0)
- ESI states (L0, L0s-tx only, L1)
- Intel ME states (M0, M1, Mdisable, Moff)
- System states (S0, S1, S4, S5)

1.2.11 Security

- TPM1.2 and Intel VT-d for server security

1.2.12 Other

- Integrated IOxAPIC
- Extended IA-32 mode - 32 bit APIC ID (Legacy IA-32 mode is 8 bits)

1.3 Terminology

Table 1-2 defines the acronyms, conventions, and terminology used throughout the specification.

Table 1-2. Terminology (Sheet 1 of 3)

Term	Description
APIC	Advanced Programmable Interrupt Controller
ASIC Repeater	A chip which intercepts the Intel QuickPath Interconnect traffic. It repeats the traffic, but also sends appropriate data to the logic analyzer.
BIST	Built-In Self Test
BMC	Baseboard Management Controller. A microcontroller used for remote platform management.
IOH	IOH with two Intel® QuickPath Interconnect ports and 36 PCIe* lanes
CA	Completer Abort
Caching Agent	Intel QuickPath Interconnect coherency agent that participates in the MESIF protocol. Caches copies of the coherent memory space, potentially from multiple home agents. May also support the read-only fowardable cache state F.
CEM	Refers to the PCI Express Card Electromechanical specification
CPEI	Correctable Platform Event Interrupt
CRC	Cyclic Redundancy Code
DMA	Direct Memory Access
EHCI	Enhanced Host Controller Interface
ESI	Enterprise South Bridge Interface is the interface to the I/O legacy bridge component of the ICH
FW	Firmware; software stored in ROM
Hinted Peer-to-Peer	A transaction initiated by an I/O agent destined for an I/O target within the same root port (PCIe port)
HOA	High Order Address

Table 1-2. Terminology (Sheet 2 of 3)

Term	Description
Home Agent	Intel® QuickPath Interconnect coherency agent that interfaces to the main memory and is responsible for tracking cache-state transitions
ICH10	Intel® I/O Controller Hub, Tenth Generation
Inbound Transaction	Transactions initiated on a PCI Express port destined for an Intel® QuickPath Interconnect port
Intel® QPI	Intel® QuickPath Interconnect
Intel® QuickPath Interconnect Link Full Width	Intel® QuickPath Interconnect link with 20 physical lanes in each direction
IOH	I/O Hub
IRB	Inbound Request Buffer
Lane	A set of differential signal pairs: one pair for transmission and one pair for reception. A by-N Link is composed of N Lanes
LCI	LAN Connect Interface
Legacy ICH	The ICH that has legacy features enabled, and is typically where the firmware boot code resides
Legacy IOH	The IOH that has the Legacy ICH directly attached
Link	A dual-simplex communications path between two components. The collection of two ports and their interconnecting lanes.
Local Peer-to-Peer	A transaction initiated by an I/O agent destined for an I/O target within the same root complex
LOM	LAN on Motherboard
LPC	Low Pin Count
MP	Multi-processor
MSI	Message Signaled Interrupt
Oplin	Dual 10 Gb Ethernet Controller
ORB	Outgoing Request Buffer
Outbound Transactions	Transactions initiated on an Intel® QuickPath Interconnect port destined for a PCI Express or ESI port
PA	Physical Address
PCI Express Gen1	Common reference for 1st generation PCI Express (Base Spec revision 1.x) and speed
PCI Express Gen2	Common reference for 2nd generation PCI Express (Base Spec revision 2.x) and speed
PCM	Pulse Code Modulation
PLC	Platform LAN Connect
PME	Power Management Event
Port	In physical terms, a group of transmitters and receivers physically located on the IOH that define one side of a link
Processor	Common reference term for “processor socket”, used throughout this document
RAS	Reliability, Availability, Serviceability
Remote Peer-to-Peer	A transaction initiated by an I/O agent destined for an I/O target on a different root complex
RID	Revision ID of the IOH
RTA	Router Table Array
RTC	Real Time Clock
SATA	Serial ATA
SCMD	Sub Command

Table 1-2. Terminology (Sheet 3 of 3)

Term	Description
SEC	Single Error Correction
SMBus	System Management Bus. A two-wire interface through which various system components can communicate.
Socket	Processor (cores + uncore)
SPD	Serial Presence Detect
S/PDIF	Sony/Phillips Digital Interface
SPI	Serial Peripheral Interface. The interface for serial flash components.
SPS	Server Platform Services
SSP	System Service Processor
STD	Suspend To Disk
TCO	Total Cost of Ownership
UHCI	Universal Host Controller Interface
UR	Unsupported Request
USB	Universal Serial Bus
Intel VT-d	Intel® Virtualization Technology (Intel® VT) for Directed I/O (Intel® VT-d)
Intel® 82575EB	Formerly code named “Zoar” for Dual Gigabit Ethernet Controller

1.4 Related Documents

The reader of this document should also be familiar with the components, material and concepts presented in the documents listed in Table 1-3.

Table 1-3. Related Documents

Document	Comment[1]
Intel® 7500 Chipset Thermal Mechanical Design Guide	www.intel.com
Intel® Xeon® Processor 7500 Series Datasheet, Volume 1	www.intel.com
Intel® Xeon® Processor 7500 Series Datasheet, Volume 2	www.intel.com
PCI Express Base Specification, Revision 1.1	www.pcisig.com
PCI Express Base Specification, Revision 2.0	www.pcisig.com
Intel® I/O Controller Hub 9 (ICH9) Family Datasheet	www.intel.com
Intel® I/O Controller Hub 10 (ICH10) Family Datasheet	www.intel.com
SMBus Specification, Revision 2.0	www.smbus.org

§

2 Platform Topology

2.1 Introduction

The I/O Hub component (IOH) provides a connection point between various I/O components and Intel QuickPath Interconnect based processors. The IOH supports the Intel Xeon processor 7500 series and Intel Itanium processor 9300 series.

The Intel QuickPath Interconnect ports are used for processor-to-processor and processor-to-IOH connections.

2.2 IOH Supported Topologies

The IOH-based platform supports a subset of the possible system topologies. The supported configurations are specifically listed in the following figures. Note that the figures do not represent the different variations of processor and IOH population in the system, rather the figures represent the physical layout and connections of the topologies. The following terminology is used to describe the following topologies.

Terminology

Legacy Bridge: In the following figures, legacy bridge refers to the ICH component. The legacy bridge contains the legacy functions required for a industry standard operating system. The ICH is connected solely by the ESI port. The IOH has one ESI port capable of connecting to a legacy bridge. Legacy bridge connections are not explicitly illustrated in all figures. Readers should assume that only one IOH is connected to the active legacy bridge.

Legacy IOH: One IOH functions as a “Legacy IOH”. The legacy IOH contains the central resources for the system and interfaces to the legacy bridge. The legacy IOH is the only IOH where the Intel Manageability Engine (Intel ME) will be enabled.

Non-Legacy IOH: In a non-partitioned system, the IOHs that are not the “Legacy IOH” are referred to as non-legacy IOHs. The ESI and Intel ME are not enabled and they are not connected to a legacy bridge (ICH).

2.2.1 Platform Topologies

This section illustrates platform topologies supported for the Intel Xeon processor 7500 series and Intel Itanium processor 9300 series.

Figure 2-1 illustrates the standard 4-socket 2-IOH topology.

Figure 2-1. 4-Socket 2-IOH MP Topology

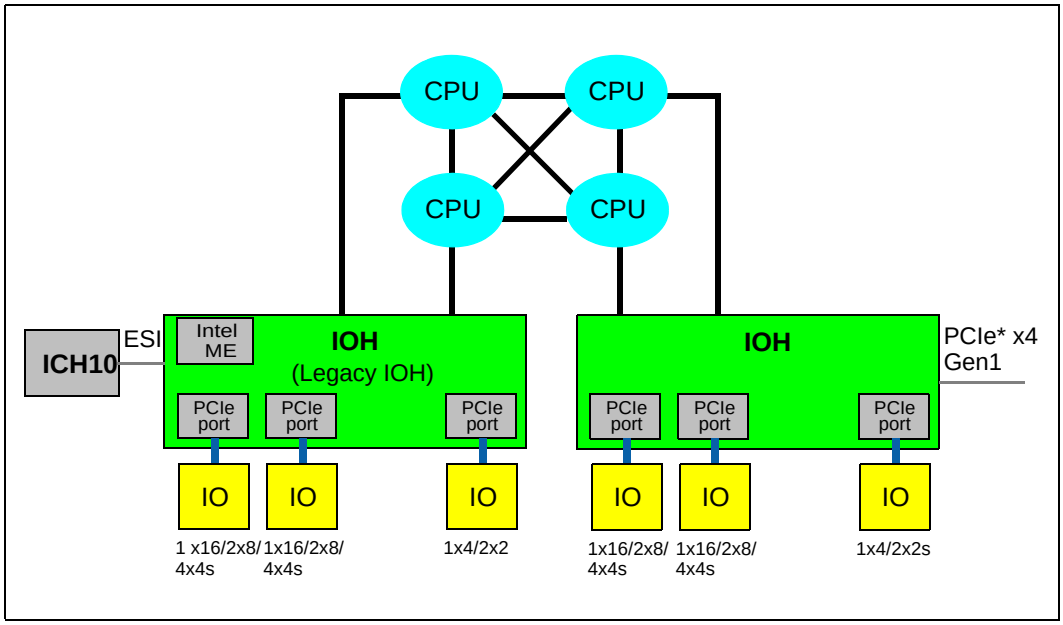

Note:

1. For multiprocessor topologies, the unused ESI port on the non-legacy IOH can be configured as a Gen1 PCIe x4 link.
2. For partially populated systems, the ICH10 must be connected to an IOH that is directly connected to a CPU.

Figure 2-2 demonstrates a 2-socket 2-IOH topology.

Figure 2-2. 2-Socket 2-IOH Topology

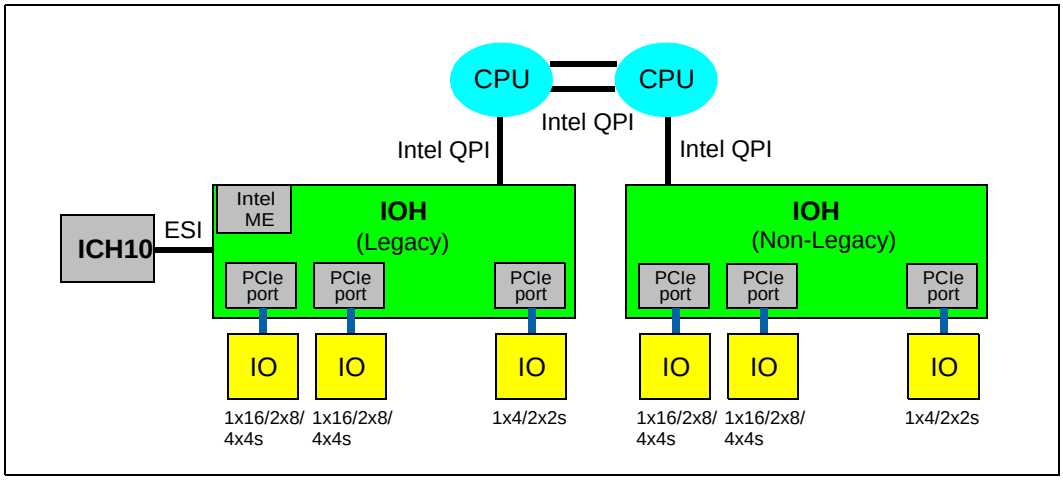

Figure 2-3 illustrates an 8-socket glueless topology.

Figure 2-3. 8-Socket Glueless MP Topology

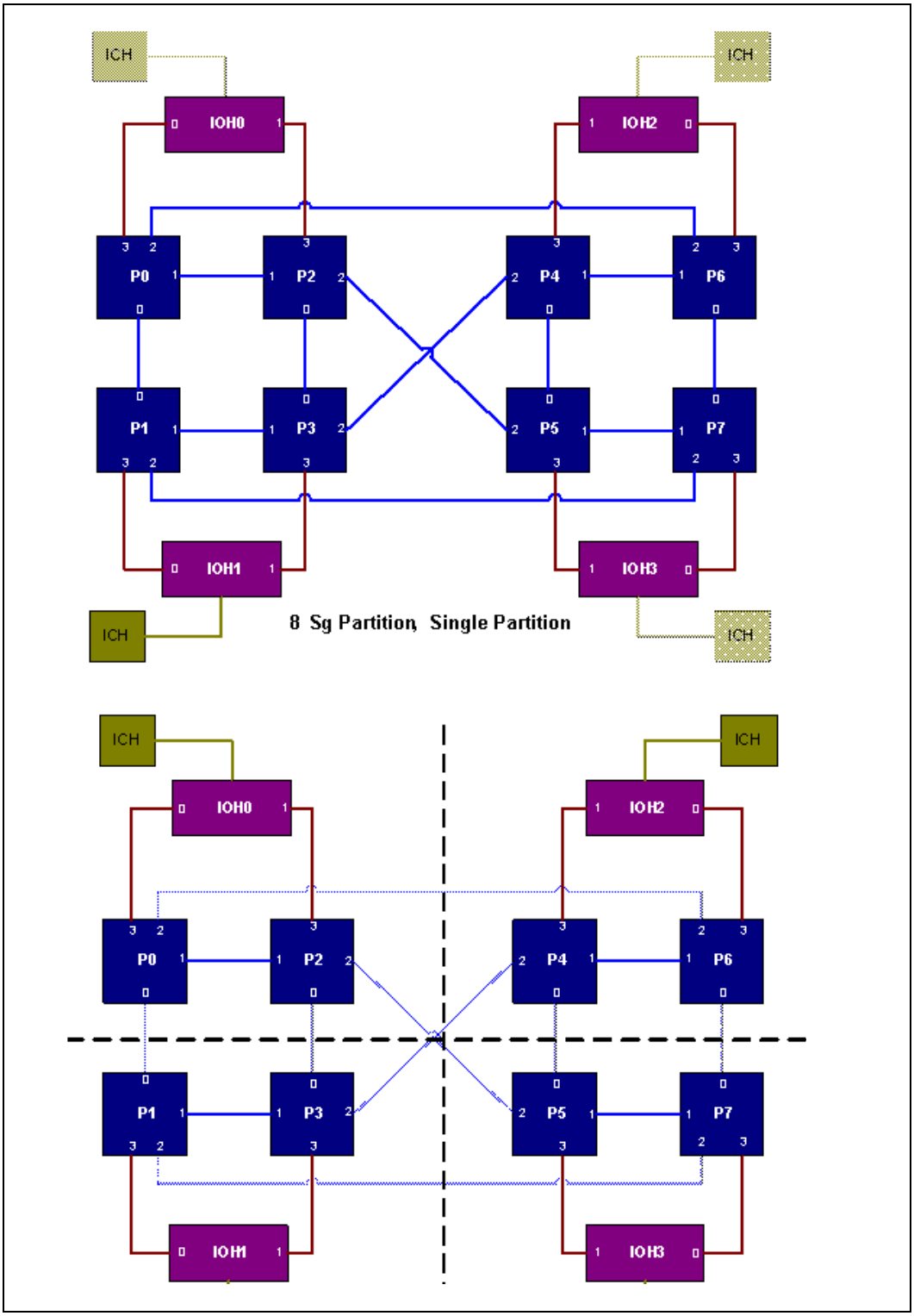

2.2.1.1 Partitioning

Figure 2-4 is an example topology of a partitioned system. For details about partitioning, please refer to the Chapter 11, "Partitioning".

Figure 2-4. Hard Partitioned MP Topology

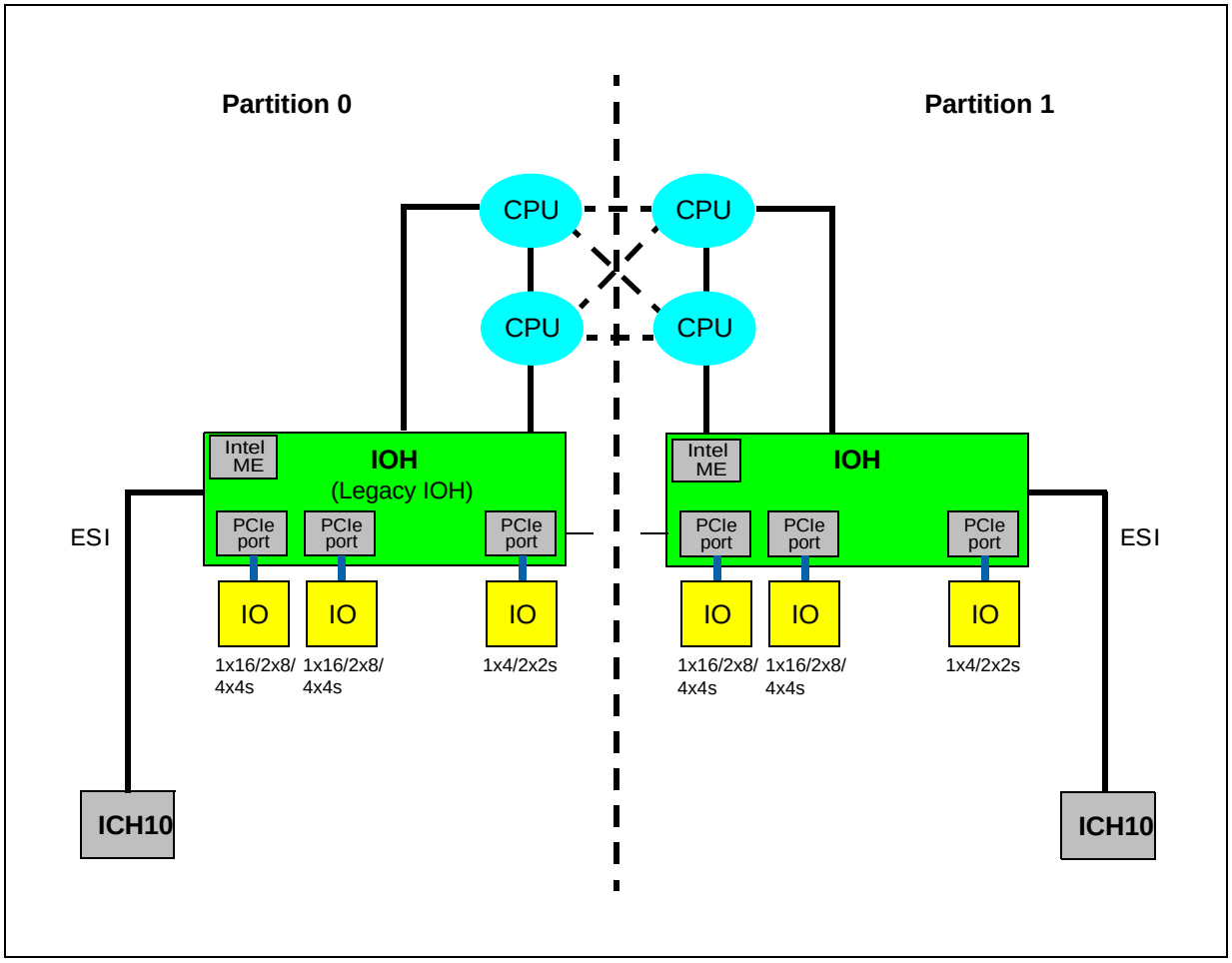

Note: The dashed lines represent Intel® QuickPath Interconnect links which are quiesced as well as delineation between the two logical partitions.

2.3 I/O Sub-System

The IOH has multiple PCI Express ports. Figure 2-3 illustrates potential I/O sub-systems using Intel and other common I/O ingredients. They are meant for reference only since it is platform dependent. This example shows a typical server topology. There are other topologies with different size switches (or none at all) depending on the performance/cost/connectivity requirements. Dual IOH topologies would enable roughly twice as many PCIe lanes, but add cost and have I/O bandwidth implications.

Figure 2-5. Example Server Topology (For Reference Only)

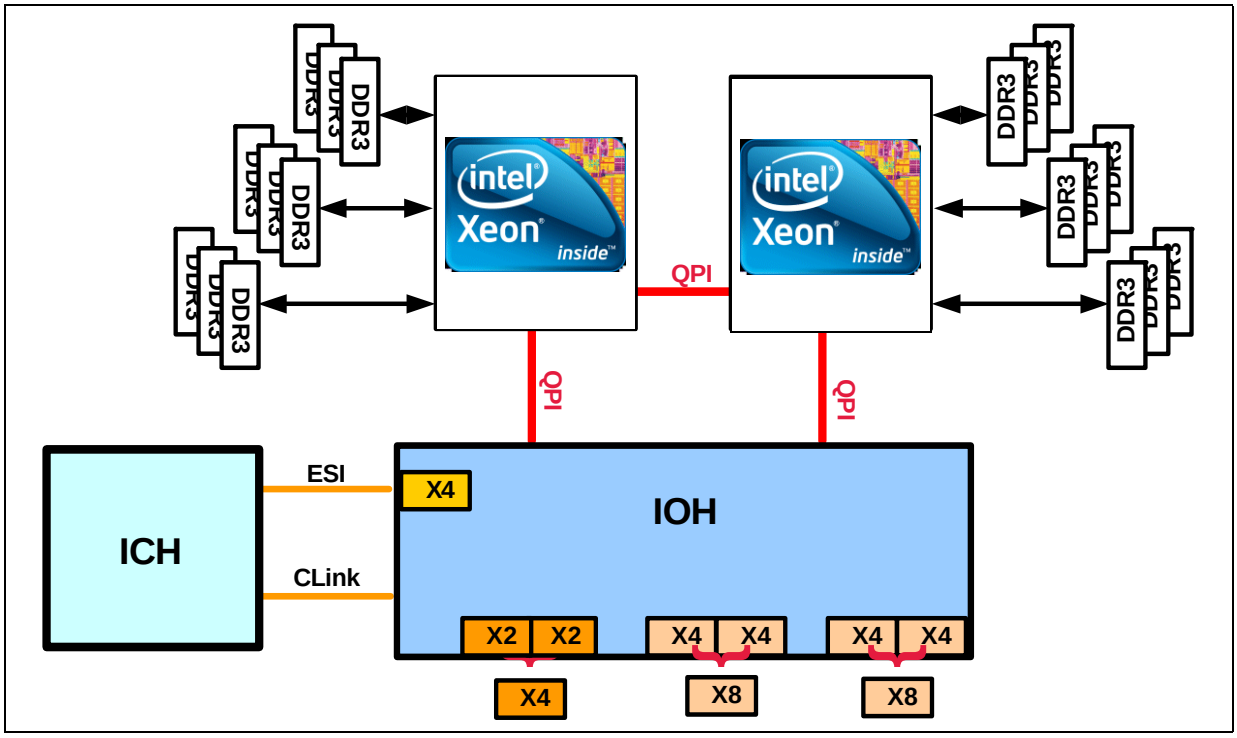

§

3 Interfaces

3.1 Introduction

This chapter describes the physical properties and protocols for each of the IOH's major interfaces.

3.2 Intel® QuickPath Interconnect

The Intel QuickPath Interconnect interface is a proprietary cache-coherent links-based interconnect.

The IOH supports the following Intel QuickPath Interconnect features:

- 64-byte cache lines
- CRC protection: 8-bit and 16-bit rolling CRC
- L0 power states
- Virtual Networks VN0 and VNA
- SMP (small-MP) profile support
- EMP (extended-MP) profile support (Intel Itanium processor 9300 series based platforms only)
- 5-bit NodeID (max) for Intel Xeon processor 7500 series; 6-bit NodeID (max) for Intel Itanium processor 9300 series
- 46-bit Physical Addressing (max) for Intel Xeon processor 7500 series based platforms; 51-bit Physical Addressing (max) for Intel Itanium processor 9300 series based platforms

Note: L0p power state is not supported

Note: Intel QuickPath Interconnect Port Bifurcation is not supported by the IOH.

3.2.1 Physical Layer

The Intel QuickPath Interconnect Physical layer implements a high-speed differential serial signaling technology. The IOH implements the following features associated with this technology:

- Differential signaling
- Forwarded clocking
- 4.8 GT/s, 5.86 GT/s or 6.4 GT/s data rate (up to 12.8 GB/s/direction peak bandwidth per port)
  - Intel Itanium processor 9300 series supports only 4.8 GT/s
- Slow boot speed of 66.66 MT/s
- L0, L0s, and L1 power states (Intel Itanium processor 9300 series does not support L0s or L1)
- Common reference clocking (same clock generator for both sender and receiver)
- Unidirectional data path in each direction supporting full duplex operation

- Intel® Interconnect Built-In Self Test (Intel® IBIST) for high-speed testability
- Polarity and Lane Reversal
- Clock Fail-safe Mode
- All required features for SMP and EMP profiles (for Intel Itanium processor 9300 series-based platforms only)

No support is provided for any runtime determinism in the IOH.

3.2.1.1 Supported Frequencies

The frequencies used on the Intel QuickPath Interconnect will be common for all ports. Support for normal operating mode of 4.8 GT/s, 5.86 GT/s or 6.4 GT/s is provided by the Physical layer. The Intel Itanium processor 9300 series based platform supports only 4.8 GT/s. Settings for the operational frequency is done through strapping pins.

The Intel QuickPath Interconnect links will come out of reset in slow mode (66.66 MT/s) independent of the operational frequency. This is based purely on the reference clock (133 MHz) divided by four. Firmware will then program the Physical layer to the operational frequency, followed by a soft reset of the Physical layer, at which point the new frequency takes over.

Table 3-1. Intel QuickPath Interconnect Frequency Strapping Options

QPIFreqSel[1:0]	Intel QuickPath Interconnect Operational Frequency Mode
00	4.8 GT/s
01	5.86 GT/s (Intel Xeon processor 7500 series-based platform)s
10	6.4 GT/s
11	Reserved

3.2.1.2 Supported Widths

The IOH supports two full-width Intel QuickPath Interconnect ports. Bifurcation of one full-width port into two half-width ports is not supported.

Note: The Intel Itanium processor 9300 series-based platform also supports connecting Intel® QuickPath Interconnect ports as quarter-width ports with unused lanes unconnected.

3.2.1.3 Physical Layer Initialization

The Intel QuickPath Interconnect physical layer initialization establishes:

- Link wellness through test pattern exchange
- Negotiated width of the port for degraded mode
- Presence of an Intel QuickPath Interconnect component
- Frequency is determined via strapping pins. See Section 3.2.1.1 for details.

See Section 3.2.1.5 for references to configuration registers in the physical layer used in the initialization process.

3.2.1.4 Clocking

The Intel QuickPath Interconnect uses a common (plesiochronous) clock between components to remove the need for “elastic buffers”, such as those used in PCI Express for dealing with the clock frequency differential between sender and receiver. This decreases latency through the Physical layer.

A single clock signal, referred to as the “forwarded” clock, is sent in parallel with the data from every Intel QuickPath Interconnect sender. Forwarded clocking is a sideband differential clock sent from each agent. The forwarded clock is not used to directly capture the data as in classical parallel buses, but is used to cancel jitter, noise, and drift that can cause reduced margin at the receiver.

3.2.1.5 Physical Layer Registers

The IOH Intel QuickPath Interconnect register details can be found in Chapter 21, “Configuration Register Space.”

3.2.2 Link Layer

The IOH Link layer supports the following features:

- Virtual Networks VN0 and VNA (Adaptive)
- SNP, HOM, DRS, NDR, NCB, NCS
- 8-bit and 16-bit rolling CRC

3.2.3 Routing Layer

The Routing layer provides bypassing for each target Intel QuickPath Interconnect physical port to allow requests that target other Intel QuickPath Interconnect physical ports to bypass under normal traffic patterns.

3.2.3.1 Routing Table

The IOH uses a routing table for selecting the Intel QuickPath Interconnect port to send a request to based on the target NodeID. After reset, the routing table is defaulted to disabled. In this mode, all responses are sent on the same port on which they were received. No requests can be sent from the IOH until the routing table is initialized.

3.2.4 Protocol Layer

The protocol layer is responsible for translating requests from the core into the Intel QuickPath Interconnect domain, and for maintaining Intel QuickPath Interconnect protocol semantics. The IOH is a fully-compatible Intel QuickPath Interconnect caching agent. It is also a fully-compliant I/O proxy agent for non-coherent I/O traffic. The IOH Protocol layer supports the following features:

- Intel QuickPath Interconnect caching agent
- Intel QuickPath Interconnect firmware agent, configuration agent, and I/O proxy agent
- Source Broadcast Snooping (Intel Xeon processor 7500 series based platforms only)
- Home Node Broadcast/Directory Snooping

- Router Broadcast Snooping (Intel Xeon processor 7500 series based platforms only)
- Source address decoder compatibility with Intel Xeon processor 7500 series and Intel Itanium processor 9300 series based platforms architectures
- Lock Arbiter

3.2.4.1 Supported Transactions

This section gives an overview of all the Intel QuickPath Interconnect transactions that the IOH supports.

Transactions are broken up into four broad categories for the IOH. The direction indication, inbound and outbound, is based on system transaction flow toward main memory, not the Intel QuickPath Interconnect port direction. Inbound is defined as "transactions that IOH sends to the Intel QuickPath Interconnect", while outbound are "transactions that IOH receives from the Intel QuickPath Interconnect."

Inbound Coherent are transactions that require snooping of other caching agents.

Inbound Non-Coherent transactions do not snoop other agents.

Outbound Snoops are snoops from peer agents that need to check the IOH write cache.

Outbound Non-coherent transactions target the IOH as the home agent for I/O space. This also includes transactions to the lock arbiter within the IOH.

Table 3-2. Protocol Transactions Supported (Sheet 1 of 2)

Category	Intel QuickPath Interconnect Type	Intel QuickPath Interconnect Transaction
Inbound Coherent + Responses	Home Requests	RdCur[6], RdCode, InvItoE, WbMtoI, WbIData, WbIDataPtl
	Snoop Requests	SnpCur[6], SnpCode, SnpInvItoE
	Normal Response	Cmp, DataC_[I,S/F[1]], DataC_[I,S/F[1]]_Cmp, Gnt_Cmp
	Conflict Response	FrcAckCnflt, DataC_[I,S/F[1]]_FrcAckCnflt, Gnt_FrcAckCnflt
	Forward Response[2]	Cmp_FwdCode, Cmp_FwdInvOwn, Cmp_FwdInvItoE
Inbound Non-Coherent + Responses	Request DRAM	NonSnpWr[5], NonSnpWrData[5], NonSnpWrDataPtl[5], NonSnpRd[5]
	Request I/O	NcP2PS, NcP2PB
	Request Special	PrefetchHint[5], IntLogical[5], IntPhysical[5], NcMsgB-PMReq[5], NcMsgB-VLW[5] IntPhysical[6]
	Lock & Quiescence Flows	NcMsgS-StopReq1, NcMsgS-StopReq2, NcMsgS-StartReq1, NcMsgB-StartReq2
	Response	Cmp, DataNC, CmpD, DataC_I_Cmp, DataC_I
Outbound Snoop	Snoop Request	SnpCode, SnpData, SnpCur[6], SnpInvOwn, SnpInvItoE, SnpInvXtoI[6]
	Response to Home	RspI, RspCnflt, RspIWb, WbIData, WBIDataPtl
	Response to Requestor	N/A

Table 3-2. Protocol Transactions Supported (Sheet 2 of 2)

Category	Intel QuickPath Interconnect Type	Intel QuickPath Interconnect Transaction
Outbound Non-Coherent	Request I/O or internal IOH space	NcWr, NcWrPtl, WcWr, WcWrPtl, NcRd, NcRdPtl, NcIOWr, NcIORd, NcCfgWr, NcCfgRd, NcP2PS, NcP2PB
	Special Messages	IntPhysical[3], IntLogical[3,5], IntAck, NcMsgB-EOI, NcMsgS-Shutdown, NcMsgB-GPE, NcMsgB-CPEI, NcMsgB/S-<other>[4], IntPrioUpd, DebugData[3], FERR
	Quiescence	<Done through CSR reads and writes to control StopReq*/StartReq* flow>
	Lock	NcMsgS-ProcLock[5], NcMsgS-ProcSplitLock[5], NcMsgS-Quiesce[5], NcMsgS-Unlock[5], NcMsgS-StopReq1, NcMsgS-StopReq2, NcMsgS-StartReq1, NcMsgB-StartReq2
	Response	Cmp, DataNC, CmpD

Notes:
1. S-state transfers are only supported in Intel® QuickPath Interconnect for Large MP systems with no F-state support (Intel Itanium processor 9300 series based platforms only)
2. Forward Response only occurs after an AckConflt was sent
3. IOH takes no action and responds with Cmp
4. IOH takes no action and responds with CmpD
5. Intel Xeon processor 7500 series based platforms only
6. Intel Itanium processor 9300 series based platforms only

3.2.4.2 Snooping Modes

The IOH supports peer agents that are involved in coherency. The IOH contains a 32-bit or 64-bit (EMP profiles) vector to indicate peer caching agents that will specify up to 31 or 63 (EMP profiles) peer caching agents that are involved in coherency. When the IOH sends an inbound coherent request, snoops will be sent to all agents in this vector, masking the home agent. Masking of the agent is required normal behavior in the Intel QuickPath Interconnect, but a mode to disable masking is also provided in the IOH.

3.2.4.3 Broadcast Support

The IOH supports broadcast to any 5-bit NodeID (SMP profile) or 6-bit NodeID (EMP profile).

3.2.4.4 Lock Arbiter

The Lock Arbiter is a central Intel QuickPath Interconnect system resource used for coordinating lock and quiescence flows on the Intel QuickPath Interconnect. There is a single lock arbiter in the IOH which can accommodate a maximum of eight simultaneous issuers with 31 peer NodeID targets for Intel Xeon processor 7500 series and 63 peer NodeID targets for Intel Itanium processor 9300 series-based platforms. For PHold support, the lock arbiter must be assigned to the IOH that has the legacy ICH connected. IOH will not support sending PHold on the Intel QuickPath Interconnect.

The Lock Arbiter uses two different participant lists for issuing the StopReq*/StartReq* broadcasts: one for Lock, and another for quiescence.

3.3 PCI Express* Interface

PCI Express offers a high bandwidth-to-pin interface for general-purpose adapters that interface with a wide variety of I/O devices. The *PCI Express Base Specification,* Revision 2.0 provides the details of the PCI Express protocol.

3.3.1 Gen1/Gen2 Support

The IOH supports both the PCI Express First Generation (Gen1) and the PCI Express Second Generation (Gen2) specifications. The Gen2 ports can be configured to run at Gen1 speeds; however, Gen1 ports cannot be configured to run at Gen2 speeds.

All PCI Express ports are capable of operating at both Gen1 and Gen2 speeds.

3.3.2 PCI Express* Link Characteristics - Link Training, Bifurcation, and Lane Reversal Support

3.3.2.1 Port Bifurcation

The IOH supports port bifurcation using PEWIDTH[5:0] hardware straps. Table 19-12, "PEWIDTH[5:0] Strapping Options" illustrates the strapping options for IO Unit (IOU) 0 to 2. The IOH supports the following configuration modes:

- The width of all links are exactly specified by the straps
- The width of all links are programmed by the BIOS using the PCIE_PRTx_BIF_CTRL register (wait on BIOS mode)

3.3.2.2 Link Training

The IOH PCI Express devices support the following link widths: x16, x8, x4, x2, x1, up to the maximum allowed for the device based on the bifurcation settings. Each device will first attempt to train at the highest possible width configured. If there is a failure to train at the maximum width, the IOH will attempt to link at progressively smaller widths until training is successful.

For full-width link configurations, lane reversal is supported. Most degraded link widths also support lane reversal, see Table 3-3, "Supported Degraded Modes".

Figure 3-1. PCI Express* Interface Partitioning

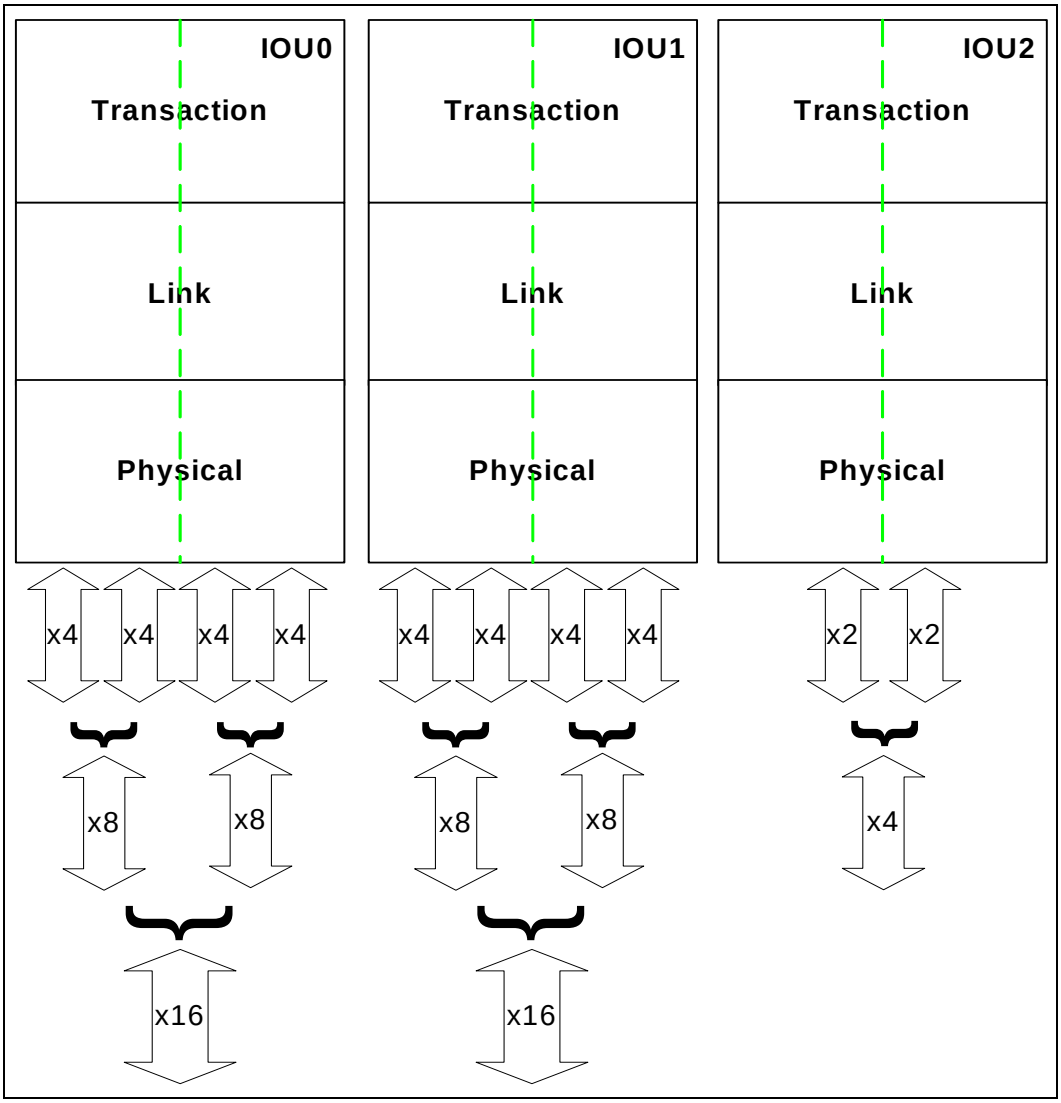

3.3.3 Degraded Mode

Degraded mode is supported for x16, x8, x4 and x2 link widths. The IOH supports degraded mode operation at half the original width and quarter of the original width or at x1. This mode allows one half or one quarter of the link to be mapped out if one or more lanes should fail during normal operation. This allows for continued system operation in the event of a lane failure. Without support for degraded mode, a failure on a critical lane such as lane 0 could bring the entire link down in a fatal manner. This can be avoided with support for degraded mode operation. For example, if lane 0 fails on a x8 link, then the lower half of the link will be disabled and the traffic will continue at half the performance on lanes 4-7. Similarly, a x4 link would degrade to a x2 link. This remapping will occur in the physical layer, and the link and transaction layers are unaware of the link width change. The degraded mode widths are automatically attempted every time the PCI Express link is trained. The events that trigger PCI Express link training are documented in the *PCI Express Base Specification,* Revision 2.0.

IOH-supported degraded modes are shown below. Table 3-3 should be read such that the various modes indicated in the different rows would be tried by IOH, but not necessarily in the order shown in the table. IOH would try a higher width degraded mode before trying any lower width degraded modes. IOH reports entry into or exit from degraded mode to software (see Chapter 21 and also records which lane failed. Software can then report the unexpected or erroneous hardware behavior to the system operator for attention, by generating a system interrupt per Chapter 16, "IOH Error Handling Summary."

Table 3-3. Supported Degraded Modes

Original Link Width[1]	Degraded Mode Link width and Lanes Numbers
x16	x8 on either lanes 7-0,0-7,15-8,8-15
	x4 on either lanes 3-0,0-3,4-7,7-4,8-11,11-8,12-15,15-12
	x2 on either lanes 1-0,0-1,4-5,5-4,8-9,9-8,12-13,13-12
	x1 on either lanes 0,1,2,3,4,5,6,7,8,9,10,11,12,13,14,15
x8	x4 on lanes 7-4,4-7,3-0,0-3
	x2 on lanes 5-4,4-5, 1-0, 0-1
	x1 on lanes 0,1,2,3,4,5,6,7
x4	x2 on lanes 1-0,0-1
	x1 on lanes 0,1,2,3
x2	x1 on lanes 0,1

Note:
1. This is the native width the link is running at when degraded mode operation kicks-in.

3.3.4 Lane Reversal

The IOH supports lane reversal on all PCI Express ports, regardless of the link width (x16, x8, x4, and x2). The IOH allows a x4 or x8 card to be plugged into a x8 slot that is lane-reversed on the motherboard, and operate at the maximum link width of the card; similarly for a x4 card plugged into a lane-reversed x4 slot, and a x2 card plugged into a lane-reversed x2 slot. Note that for the purpose of this discussion, a "xN slot" refers to a CEM/SIOM slot that is capable of any width higher than or equal to xN but is electrically wired on the board for only a xN width. A x2 card can be plugged into a x8, or x4 slot and work as x2 only if lane-reversal is *not* done on the motherboard; otherwise, it would operate in x1 mode.

3.3.5 Form-Factor Support

The IOH supports Cardedge and Server I/O Module (SIOM) form-factors. Form-factor specific differences that exist for hot-plug and power management are captured in their individual sections. SIOM does not support double-wide x16 modules and supports only single-wide x8 modules.

3.3.6 IOH Performance Policies

Unless otherwise noted, the performance policies noted in this section apply to a standard PCI Express port on the IOH.

3.3.6.1 Max_Payload_Size

The IOH supports a Max_Payload_Size of 256 Bytes on PCI Express ports and 128 Bytes on ESI.

3.3.6.2 Isochronous Support and Virtual Channels

The IOH does not support isochrony.

3.3.6.3 Write Combining

The IOH does not support outbound write combining or write combining on peer-to-peer transactions. Inbound memory writes to system memory could be combined in the IOH write cache.

3.3.6.4 Relaxed Ordering

The IOH does not support relaxed ordering optimizations in the outbound direction.

3.3.6.5 Non-Coherent Transaction Support

3.3.6.5.1 Inbound

Non-coherent transactions are identified by the NoSnoop attribute in the PCI Express request header being set. For writes the NoSnoop attribute is used in conjunction with the Relaxed Ordering attribute to reduce snoops on the Intel QuickPath Interconnect interface. For inbound reads with the NoSnoop attribute set, the IOH does not perform snoops on the Intel QuickPath Interconnect. This optimization for reads and writes can be individually disabled.

3.3.6.5.2 Outbound

IOH always clears the NoSnoop attribute bit in the PCI Express header for transactions that it forwards from the processor. For peer-to-peer transactions from other PCI Express ports and ESI, the NoSnoop attribute is passed as-is from the originating port.

3.3.6.6 Completion Policy

The *PCI Express Base Specification,* Revision 2.0 requires that completions for a specific request must occur in linearly-increasing address order. However, completions for different requests are allowed to complete in any order.

Adhering to this rule, the IOH sends completions on the PCI Express interface in the order received from the Intel QuickPath Interconnect interface and never artificially delays completions received from the Intel QuickPath Interconnect to PCI Express. The IOH always attempts to send completions within a stream in address-order on PCI Express, however, it will *not* artificially hold back completions that can be sent on PCI Express to achieve this in-orderness.

3.3.6.6.1 Read Completion Combining

The *PCI Express Base Specification,* Revision 2.0 allows that a single request can be satisfied with multiple “sub-completions” as long as they return in linearly-increasing address order. The IOH must split requests into cache line quantities before issue on the Intel QuickPath Interconnect, and, therefore will often complete a large request in cache line-sized sub-completions.

As a performance optimization, the IOH implements an opportunistic read completion combining algorithm for all reads towards main memory. When the downstream PCI Express interface is busy with another transaction, and multiple cache lines have returned before completion on PCI Express is possible, the PCI Express interface will combine the cache line sub-completions into larger quantities up to MAX_PAYLOAD.

3.3.6.7 PCI Express* Port Arbitration

The IOH provides a weighted round robin scheme for arbitration between the PCI Express ports for both main memory and peer-to-peer accesses, combined. Each PCI Express/ESI port is assigned a weight based on its width and speed.

3.3.6.8 Read Prefetching Policies

The IOH does not perform read prefetching for downstream PCI Express components. The PCI Express component is solely responsible for its own prefetch algorithms as it is best suited to make appropriate trade-offs.

The IOH also does not perform outbound read prefetching.

3.3.6.9 Direct Cache Access

IOH supports Direct Cache Access (DCA) from PCI Express via the standard memory write transaction. The RequesterID in an incoming memory write packet towards coherent DRAM space (note that NoSnoop bit being set in a PCI Express write packet does not necessarily mean that the write is towards non-coherent DRAM space) is compared against the list of Requesters that are DCA-capable. If there is a match and if DCA is enabled for the PCI Express ports, the tag field provides the destination NodeID information for DCA. DCA writes that are received towards non-coherent address regions (for example, peer-to-peer region, Intel QuickPath Interconnect non-coherent address space) are treated as errors. Also, the RequesterID authentication for DCA can be overridden using bit 40 in the PERFCTRL register.

There are eight requesterID that are valid DCA targets. When VT2 is enabled, it is up to the software to guarantee a valid NodeID for DCA. IOH will not do anything special to handle DCA in VT2 mode.

Note: DCA is only supported on IA-32 architecture processors.

3.3.7 Address Translation Caching (ATC)

IOH allows caching of DMA translations in PCI Express Endpoints. The purpose of having an Address Translation Cache (ATC) in an Endpoint is to minimize time-critical latencies and to provide a way of mitigating the impact on the RC of a Device that does high-bandwidth, widely-scattered DMA. The IOH will support the following ATC requirements:

- Send a translation in response to a translation request from an endpoint
- Issue translation invalidations to endpoint caches
- Identify whether the endpoint has completed an invalidation

3.3.8 PCI Express* RAS

The IOH supports the PCI Express Advanced Error Reporting (AER) capability. Refer to *PCI Express Base Specification,* Revision 2.0 for details.

Additionally, the IOH supports:

- PCI Express data poisoning mechanism. This feature can be optionally turned off, in which case the IOH will drop the packet and all subsequent packets.
- The PCI Express completion time-out mechanism for non-posted requests to PCI Express.

- The new role-based error reporting mechanism. Refer to Chapter 5, "PCI Express* and ESI Interfaces" for details.

Note: The IOH does not support the ECRC mechanism, that is, the IOH will not generate ECRC on transmitted packets and will ignore/drop ECRC on received packets.

Refer to Chapter 16, "Reliability, Availability, Serviceability (RAS)" for details on PCI Express hot-plug.

3.3.9 Power Management

The IOH does not support the beacon wake method on PCI Express. IOH supports Active State Power Management (ASPM) transitions into L0s and L1 state. Additionally, the IOH supports the D0 and D3hot power management states, per PCI Express port, and also supports a wake event from these states on a PCI Express hot-plug event. In D3hot, the IOH master aborts all configuration transactions targeting the PCI Express link. Refer to Chapter 10, "Power Management," for details of PCI Express power management support.

3.4 Enterprise South Bridge Interface (ESI)

The Enterprise South Bridge Interface (ESI) is the chip-to-chip connection between the IOH and ICH10. This high-speed interface integrates advanced priority-based servicing allowing for concurrent traffic capabilities. Base functionality is completely software transparent permitting current and legacy software to operate normally.

The IOH ESI interface supports features that are listed below in addition to the PCI Express specific messages:

- A chip-to-chip connection interface to ICH10
- 2 GB/s point-to-point bandwidth (1 GB/s each direction)
- 100 MHz reference clock
- 62-bit downstream addressing
- APIC and MSI interrupt messaging support. Will send Intel-defined "End of Interrupt" broadcast message when initiated by the processor
- Message Signaled Interrupt (MSI) messages
- SMI, SCI, and SERR error indication
- Legacy support for ISA regime protocol (PHOLD/PHOLDA) required for parallel port

3.4.1 Interface Speed and Bandwidth

Raw bit-rate on the data pins of 2.5 Gb/s, resulting in a real bandwidth per pair of 250 MB/s. In addition, the maximum theoretical realized bandwidth on the interface is 1 GB/s each direction simultaneously, for an aggregate of 2 GB/s when operating as x4 link.

3.4.2 Supported Widths

The ESI port supports x4 link width; the link width is auto-negotiated at power-on. Port bifurcation is NOT supported on ESI; the ESI port is always negotiated as a single port.

3.4.3 Performance Policies on ESI

3.4.3.1 Completion Policy

Ordering rules for the ESI port is identical to that of the PCI Express interfaces described in Chapter 6, "Ordering." However, for the case when the ICH10 sends multiple read requests with the same transaction ID, then the read completions must be returned in order. As a consequence, Read completions can be returned out of order only if they have different transaction ID's. But, as a simplification, IOH will always return all completions in original request order on ESI. This includes both peer-to-peer and memory read requests.

3.4.3.2 Prefetching Policy

ESI does not perform any speculative read prefetching for inbound or outbound reads.

3.4.4 Error Handling

The same RAS features that exist on a PCI Express port also exist on the ESI port. Refer to Section 3.3.8 for details.

3.4.4.1 PHOLD Support

The IOH supports the PHOLD protocol. This protocol is used for legacy ISA devices which do not allow the possibility for being both a master and a slave device simultaneously. Example devices that use the PHOLD protocol are legacy floppy drives, and LPC bus masters.

3.5 Reduced Media Independent Interface (RMII)

The Reduced Media Independent Interface (RMII) is a standard, low pin count, low power interface.

RMII supports connection to another management entity or LAN entity. The interface is designed as a MAC type interface, not a PHY type interface.

3.6 Control Link (CLink) Interface

The control link interface is a low pin count, low power interface. This interface is used to connect the Management Engine in IOH to the ICH10. The usage model for this interface requires lower power as it remains powered during even the lower power states. Since Platform Environmental Control Interface (PECI) signals are routed through the ICH10, these signals can also pass to the management engine over the control link interface. Firmware and data stored in the SPI Flash memory connected to the ICH10 are also read over the Control Link interface.

3.7 System Management Bus (SMBus)

The IOH includes an *SMBus Specification*, Revision 2.0 compliant slave port. This SMBus slave port provides server management (SM) visibility into all configuration registers in the IOH. Like JTAG accesses, the IOH's SMBus interface is capable of both accessing IOH registers and generating inband downstream configuration cycles to other components.

SMBus operations may be split into two upper level protocols: writing information to configuration registers and reading configuration registers. This section describes the required protocol for an SMBus master to access the IOH's internal configuration registers. Refer to the *SMBus Specification*, Revision 2.0 for the specific bus protocol, timings, and waveforms.

3.7.1 SMBus Physical Layer

The IOH SMBus operates at 3.3 V and complies with the SMBus SCL frequency of 100 kHz.

3.7.2 SMBus Supported Transactions

The IOH supports six SMBus commands:

- Block Write
- Block Read
- Word Write
- Word Read
- Byte Write
- Byte Read

To support longer PCIe timeouts the SMBus master is required to poll the busy bit to know when the data in the stack contains the desired data. This applies to both reads and writes. The protocol diagrams (Table 3-7 through Figure 3-12) only shows the polling in read transactions. This is due to the length of PCIe timeouts which may be upto several seconds. The SMBus slave can then hold the bus until completion to be returned from the PCIe.

Each SMBus transaction has an 8-bit command the master sends as part of the packet to instruct the IOH on handling data transfers. The format for this command is illustrated in Table 3-4.

Table 3-4. SMBus Command Encoding

7	6	5	4	3:2	1:0
Begin	End	MemTrans	PEC_en	**Internal Command**: 00 - Read DWord 01 - Write Byte 10 - Write Word 11 - Write DWord	**SMBus Command**: 00 - Byte 01 - Word 10 - Block 11 - Reserved. Block command is selected.

- The *Begin* bit indicates the first transaction of the read or write sequence. The examples below illustrate when this bit should be set.
- The *End* bit indicates the last transaction of the read or write sequence. The examples below best describe when this bit should be set.
- The *MemTrans* bit indicates the configuration request is a memory mapped addressed register or a PCI addressed register (bus, device, function, offset). A logic 0 will address a PCI configuration register. A logic 1 will address a memory mapped register. When this bit is set it will enable the designation memory address type.

- The *PEC_en* bit enables the 8-bit packet error checking (PEC) generation and checking logic. For the examples below, if PEC was disabled, no PEC would be generated or checked by the slave.
- The *Internal Command* field specifies the internal command to be issued by the SMBus slave. The IOH supports dword reads and byte, word, and dword writes to configuration space.
- The *SMBus Command* field specifies the SMBus command to be issued on the bus. This field is used as an indication of the transfer length so the slave knows when to expect the PEC packet (if enabled).

The SMBus interface uses an internal register stack that is filled by the SMBus master before a request to the config master block is made. Shown in Table 3-5 is a list of the bytes in the stack and their descriptions.

Table 3-5. Internal SMBus Protocol Stack

SMBus stack	Description
Command	Command byte
Byte Count	The number of bytes for this transaction
Bus Number	Bus number
Device/Function	Device[4:0] and Function[2:0]
Address High	The following fields are further defined. Reserved[3:0] Address[11:8]: This is the high order PCIe address field.
Register Number	Register number is the lower order 8 bit register offset
Data3	Data byte 3
Data2	Data byte 2
Data1	Data byte 1
Data0	Data byte 0

3.7.3 Addressing

The slave address each component claims is dependent on the NODEID and SMBUSID pin straps (sampled on the assertion of PWRGOOD). The IOH claims SMBus accesses to address 11X0_XXX. The Xs represent strap pins on the IOH. Refer to Table 3-6 for the mapping of strap pins to the bit positions of the slave address.

Note: The slave address is dependent on strap pins only and cannot be reprogrammed. It is possible for software to change the default NodeID by programming the QPIPC register but this will **not** affect the SMBus slave address.

Table 3-6. SMBus Slave Address Format (Sheet 1 of 2)

Slave Address Field Bit Position	Slave Address Source
[7]	1
[6]	1
[5]	SMBUSID strap pin
[4]	0
[3]	0

Table 3-6. SMBus Slave Address Format (Sheet 2 of 2)

Slave Address Field Bit Position	Slave Address Source
[2]	NODEID[3] strap pin
[1]	NODEID[2] strap pin
[0]	Read/Write# bit. This bit is in the slave address field to indicate a read or write operation. It is not part of the SMBus slave address.

If the Mem/Cfg bit is cleared, the address field represents the standard PCI register addressing nomenclature, namely: bus, device, function and offset.

If the Mem/Cfg bit is set, the address field has a new meaning. Bits [23:0] hold a linear memory address and bits[31:24] is a byte to indicate which memory region it is. Table 3-7 describes the selections available. A logic one in a bit position enables that memory region to be accessed. If the destination memory byte is zero, no action is taken (no request is sent to the configuration master).

If a memory region address field is set to a reserved space the IOH slave will perform the following:

- The transaction is not executed.
- The slave releases the SCL signal.
- The master abort error status is set.

Table 3-7. Memory Region Address Field

Bit Field	Memory Region Address Field
0Fh	LT_CSI BAR
0Eh	LT_PR BAR
0Dh	LT_PB BAR
0Bh - 0Ch	Reserved
0Ah	DMI RC BAR
09h	IOAPIC memory BAR
08h	VT memory BAR (Virtualization Technology)
07h	CB memory BAR 7
06h	CB memory BAR 6
05h	CB memory BAR 5
04h	CB memory BAR 4
03h	CB memory BAR 3
02h	CB memory BAR 2
01h	CB memory BAR 1
00h	Crystal Beach (CB) memory BAR 0

3.7.4 SMBus Initiated Southbound Configuration Cycles

The platform SMBus master agent that is connected to an IOH slave SMBus agent can request a configuration transaction to a downstream PCI Express device. If the address decoder determines that the request is not intended for this IOH (that is, not the IOH's bus number), it sends the request to port with the bus address. All requests outside of this range are sent to the legacy ESI port for a master abort condition.

3.7.5 SMBus Error Handling

SMBus Error Handling features:

- Errors are reported in the status byte field.
- Errors in Table 3-8 are also collected in the FERR and NERR registers.

The SMBus slave interface handles two types of errors: internal and PEC. For example, internal errors can occur when the IOH issues a configuration read on the PCI Express port and that read terminates in error. These errors manifest as a Not-Acknowledge (NACK) for the read command (*End* bit is set). If an internal error occurs during a configuration write, the final write command receives a NACK just before the stop bit. If the master receives a NACK, the entire configuration transaction should be reattempted.

If the master supports packet error checking (PEC) and the PEC_en bit in the command is set, then the PEC byte is checked in the slave interface. If the check indicates a failure, then the slave will NACK the PEC packet.

Each error bit is routed to the FERR and NERR registers for error reporting. The status field encoding is defined in the Table 3-8. This field reports if an error occurred. If bits[2:0] are 000b then the transaction was successful only to the extent that the IOH is aware. In other words, a successful indication here does not necessarily mean that the transaction was completed correctly for all components in the system.

The busy bit is set whenever a transaction is accepted by the slave. This is true for reads and writes but the affects may not be observable for writes. This means that since the writes are posted and the communication link is so slow the master should never see a busy condition. A time-out is associated with the transaction in progress. When the time-out expires a time-out error status is asserted.

Table 3-8. Status Field Encoding for SMBus Reads

Bit	Description
7	Busy
6:3	Reserved
2:0	101-111: Reserved 100: SMBus time out error. 011: Master Abort. An error that is reported by the IOH with respect to this transaction. 010: Completer Abort. An error is reported by downstream PCI Express device with respect to this transaction. 001: Memory Region encoding error. This bit is set if the memory region encoding is not orthogonal (one-hot encoding violation) 000: Successful

3.7.6 SMBus Interface Reset

The slave interface state machine can be reset by the master in two ways:

- The master holds SCL low for 25 ms cumulative. Cumulative in this case means that all the “low time” for SCL is counted between the Start and Stop bit. If this totals 25 ms before reaching the Stop bit, the interface is reset.
- The master holds SCL continuously high for 50 µs.

Note: Since the configuration registers are affected by the reset pin, SMBus masters will not be able to access the internal registers while the system is reset.

3.7.7 Configuration and Memory Read Protocol

Configuration and memory reads are accomplished through an SMBus write(s) and later followed by an SMBus read. The write sequence is used to initialize the Bus Number, Device, Function, and Register Number for the configuration access. The writing of this information can be accomplished through any combination of the supported SMBus write commands (Block, Word or Byte). The *Internal Command* field for each write should specify Read DWord.

After all the information is set up, the last write (*End* bit is set) initiates an internal configuration read. The slave will assert a busy bit in the status register and release the link with an acknowledge (ACK). The master SMBus will perform the transaction sequence for reading the data, however, the master must observe the status bit [7] (busy) to determine if the data is valid. Because the PCIe time-outs may be long the master may have to poll the busy bit to determine when the previous read transaction has completed.

If an error occurs then the status byte will report the results. This status field indicates abnormal termination and contains status information such as target abort, master abort, and time-outs.

Examples of configuration reads are illustrated below. All of these examples have Packet Error Code (PEC) enabled. If the master does not support PEC, then bit 4 of the command would be cleared and no PEC byte exists in the communication streams. For the definition of the diagram conventions below, refer to the *SMBus Specification*, Revision 2.0. For SMBus read transactions, the last byte of data (or the PEC byte if enabled) is NACKed by the master to indicate the end of the transaction.

3.7.7.1 SMBus Configuration and Memory Block-Size Reads

Figure 3-2. SMBus Block-Size Configuration Register Read

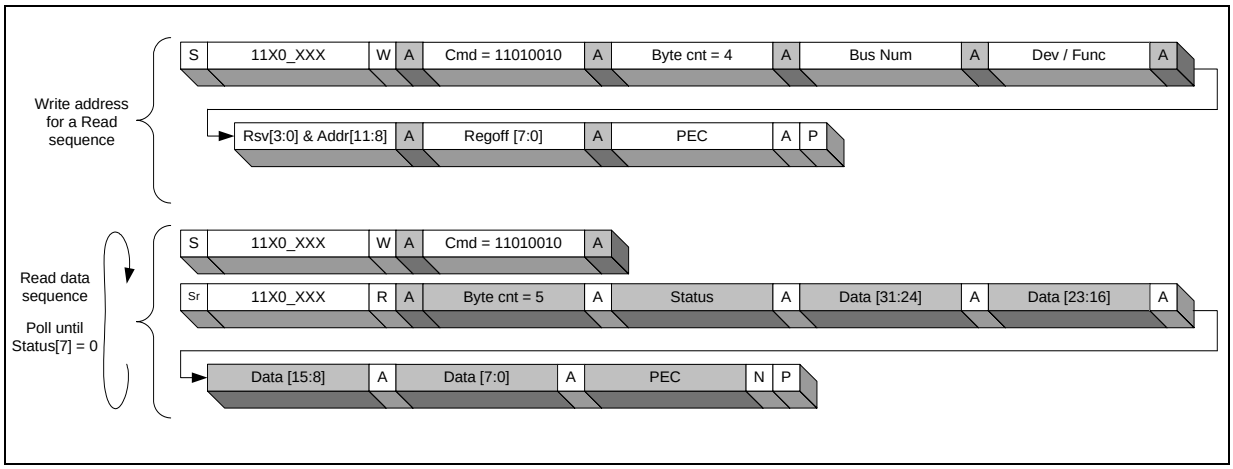

Figure 3-3. SMBus Block-Size Memory Register Read

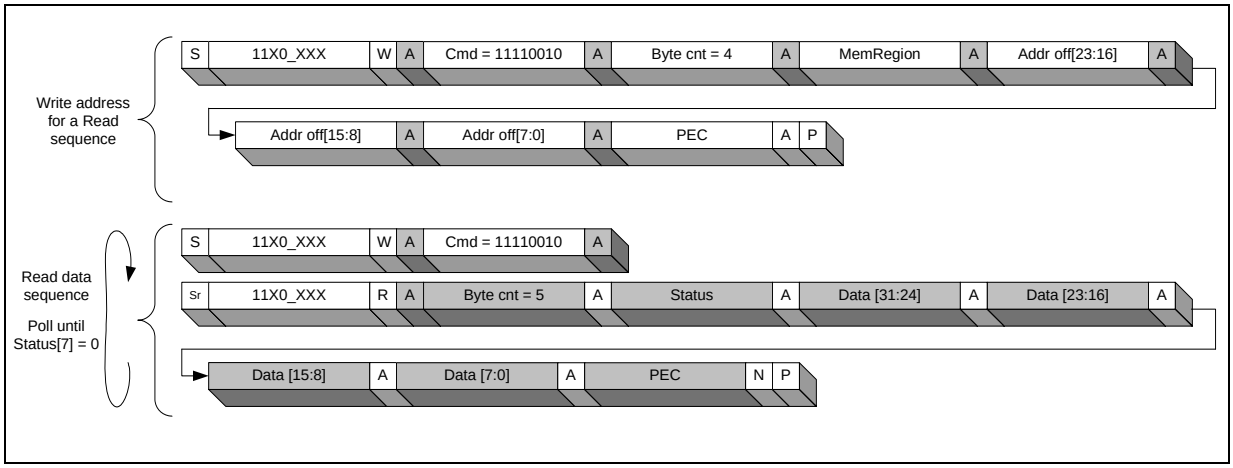

3.7.7.2 SMBus Configuration and Memory Word-Sized Reads

Figure 3-4. SMBus Word-Size Configuration Register Read

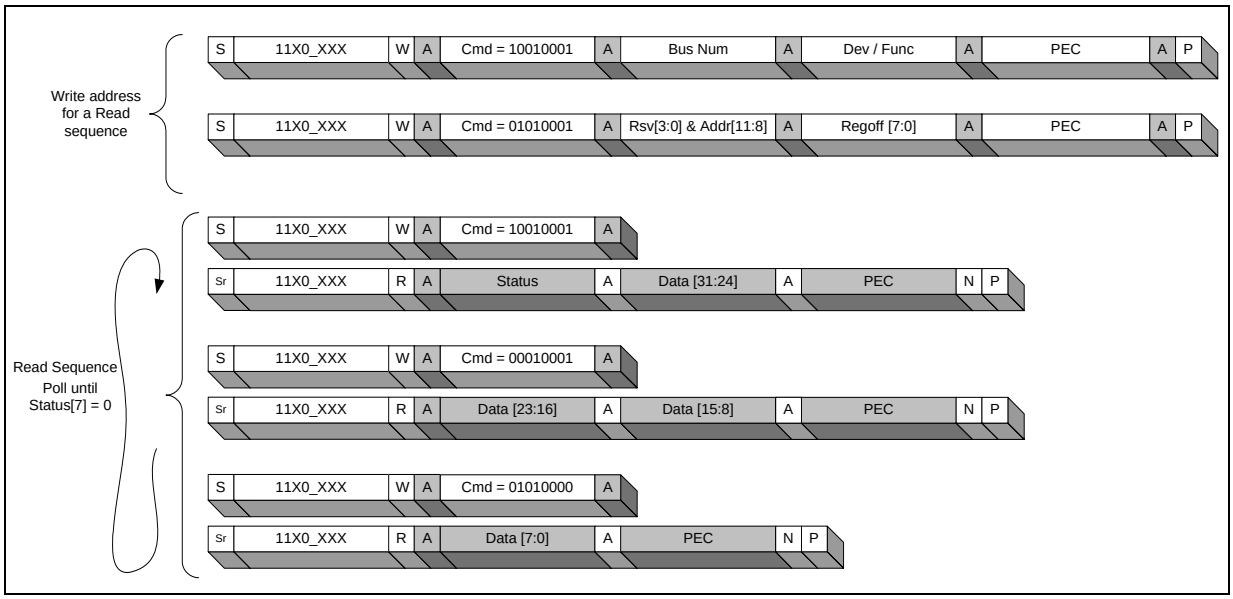

Figure 3-5. SMBus Word-Size Memory Register Read

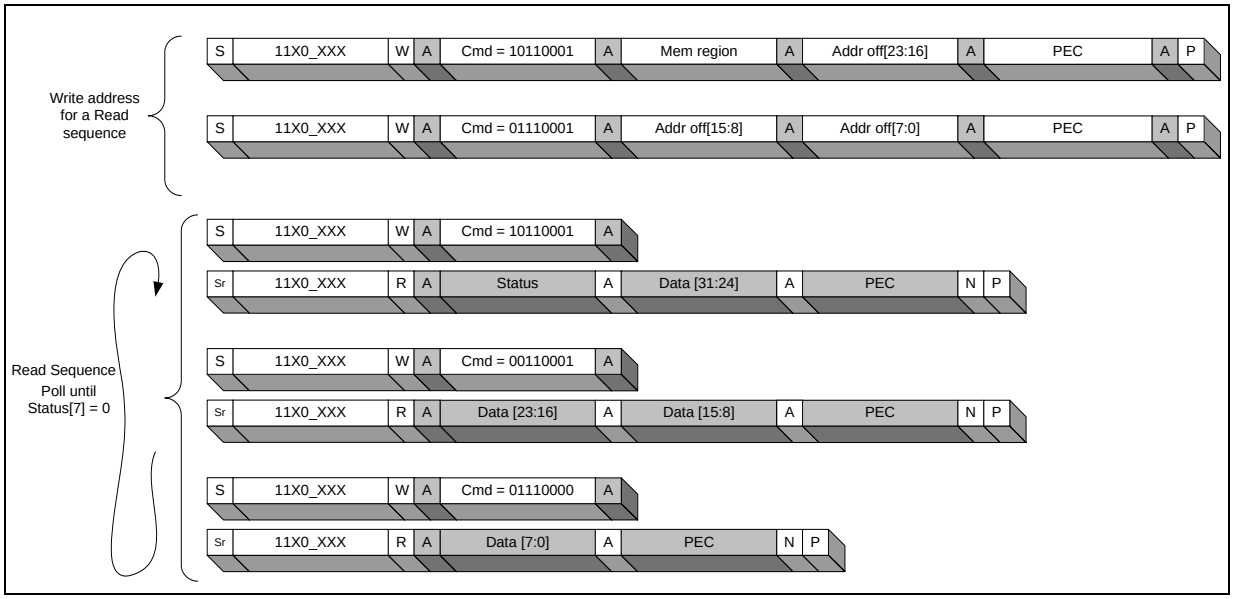

3.7.7.3 SMBus Configuration and Memory Byte Reads

Figure 3-6. SMBus Byte-Size Configuration Register Read

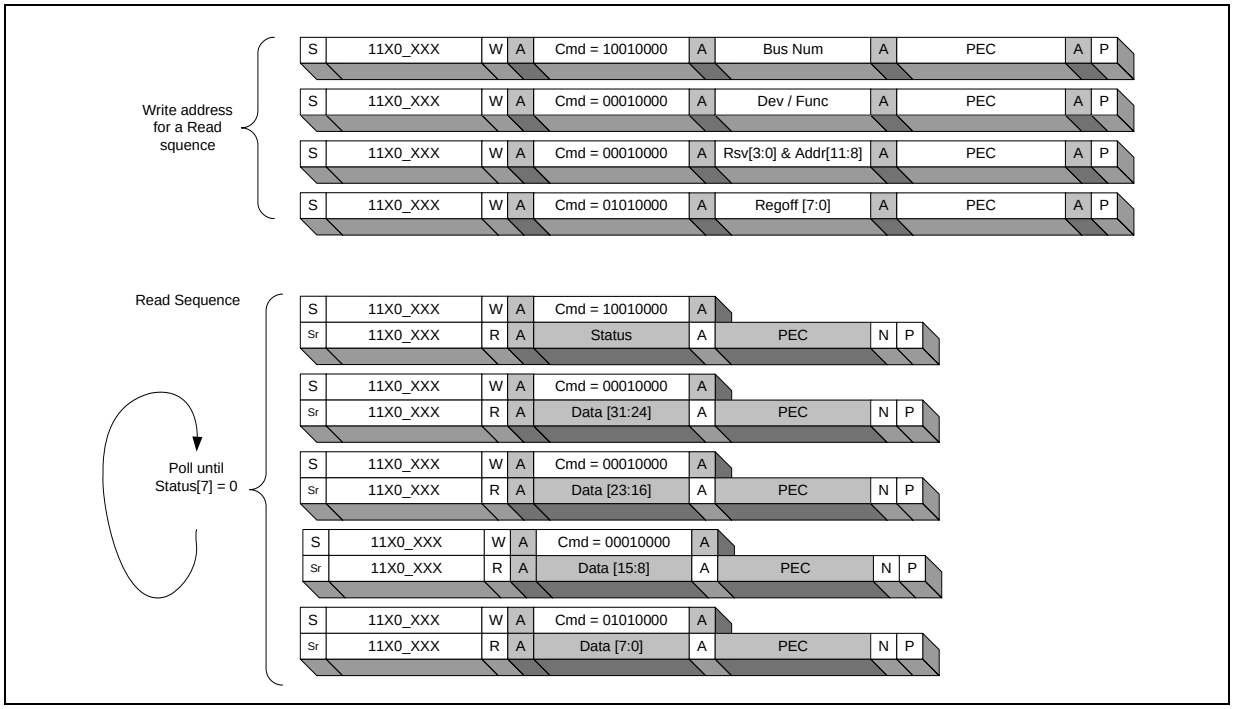

Figure 3-7. SMBus Byte-Size Memory Register Read

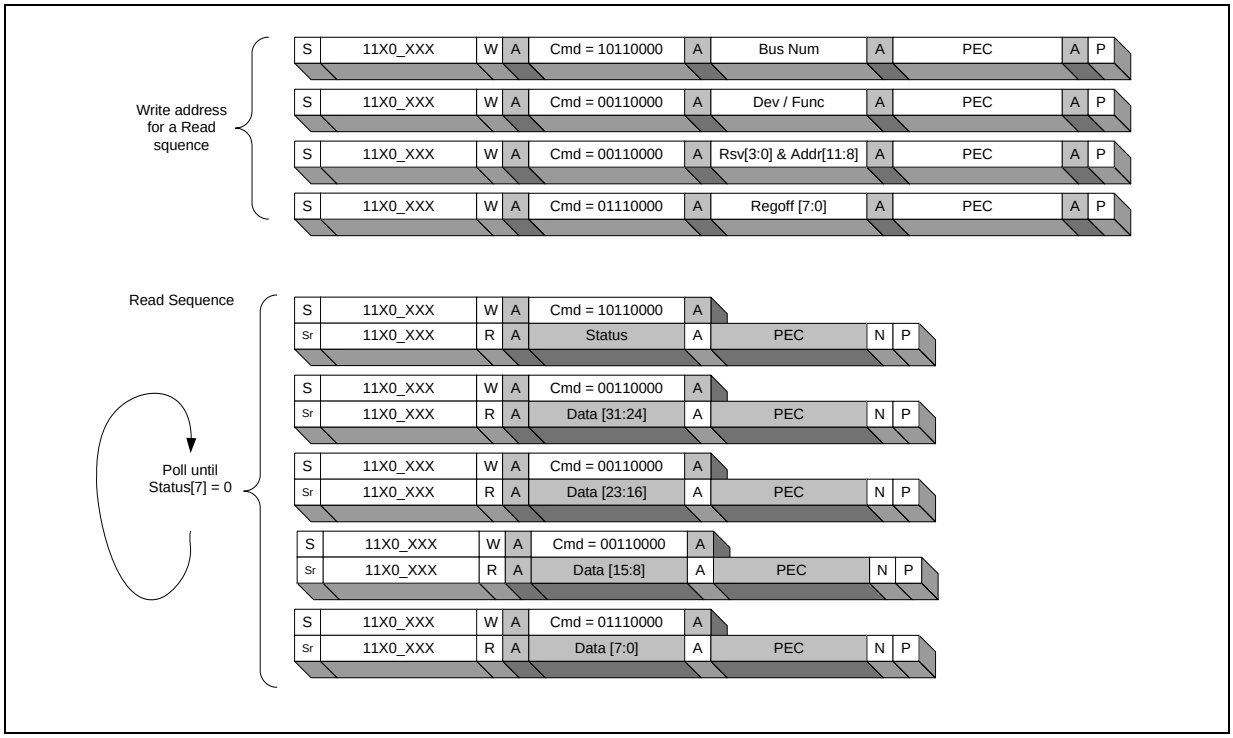

3.7.7.4 Configuration and Memory Write Protocol

Configuration and memory writes are accomplished through a series of SMBus writes. As with configuration reads, a write sequence is first used to initialize the Bus Number, Device, Function, and Register Number for the configuration access. The writing of this information can be accomplished through any combination of the supported SMBus write commands (Block, Word or Byte).

Note: On SMBus, there is no concept of byte enables. Therefore, the Register Number written to the slave is assumed to be aligned to the length of the Internal Command. In other words, for a Write Byte internal command, the Register Number specifies the byte address. For a Write DWord internal command, the two least-significant bits of the Register Number or Address Offset are ignored. This is different from PCI where the byte enables are used to indicate the byte of interest.

After all the information is set up, the SMBus master initiates one or more writes which sets up the data to be written. The final write (*End* bit is set) initiates an internal configuration write. The slave interface could potentially clock stretch the last data write until the write completes without error. If an error occurs, the SMBus interface NACKs the last write operation just before the stop bit.

Examples of configuration writes are illustrated below. For the definition of the diagram conventions below, refer to the *SMBus Specification*, Revision 2.0.

3.7.7.5 SMBus Configuration and Memory Block Writes

Figure 3-8. SMBus Block-Size Configuration Register Write

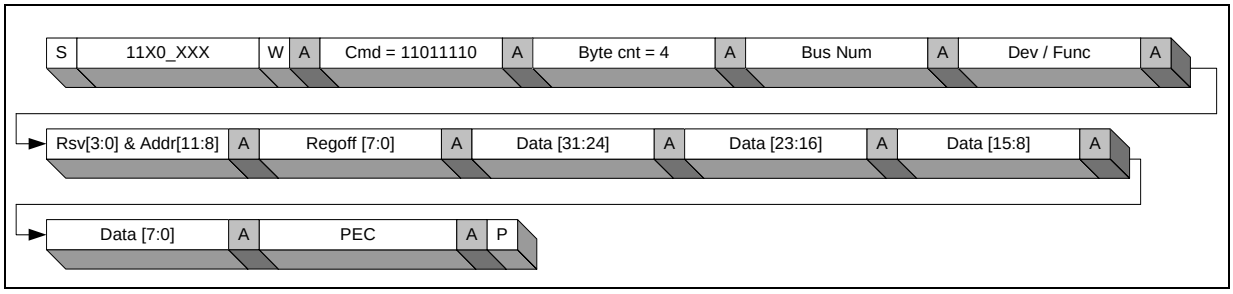

Figure 3-9. SMBus Block-Size Memory Register Write

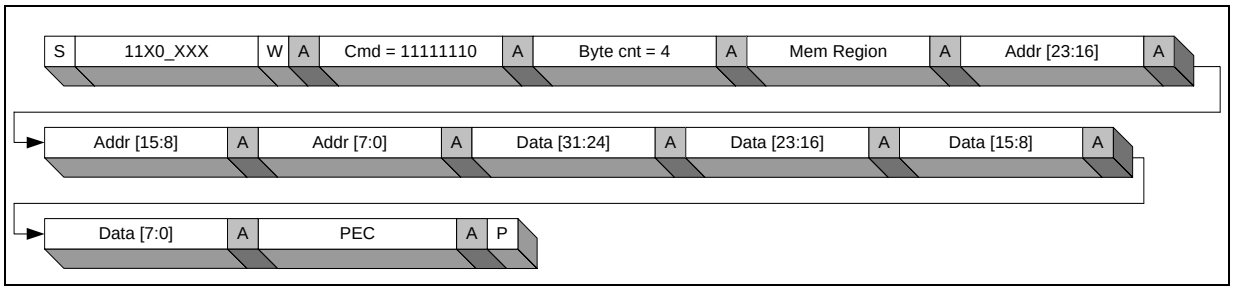

3.7.7.6 SMBus Configuration and Memory Word Writes

Figure 3-10. SMBus Word-Size Configuration Register Write

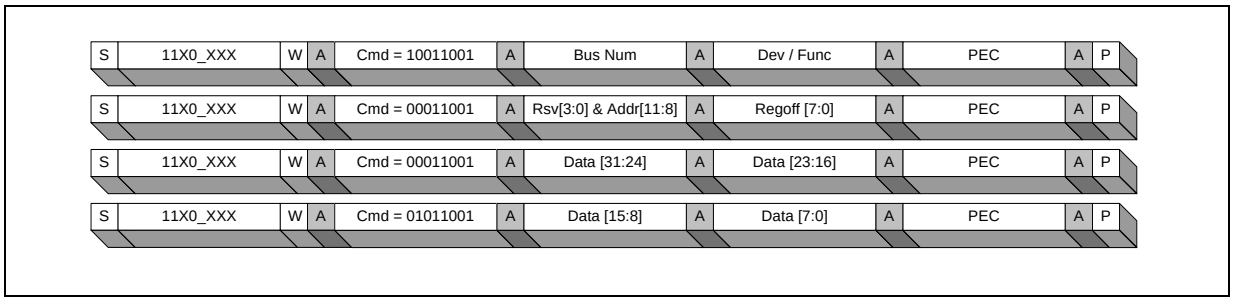

Figure 3-11. SMBus Word-Size Memory Register Write

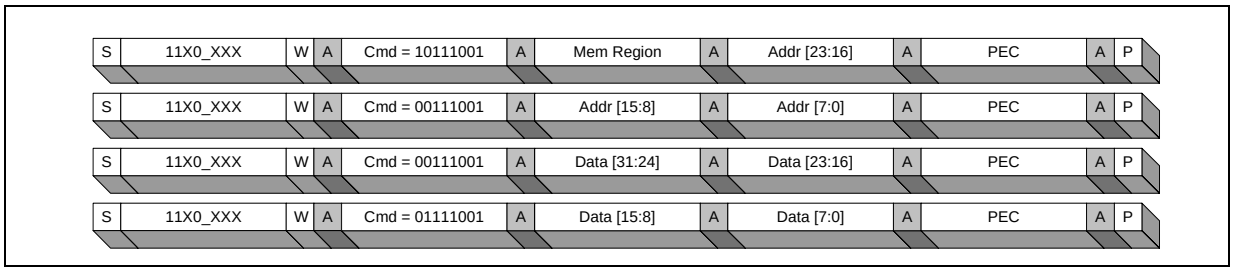

3.7.7.7 SMBus Configuration and Memory Byte Writes

Figure 3-12. SMBus Configuration Byte Write, PEC Enabled

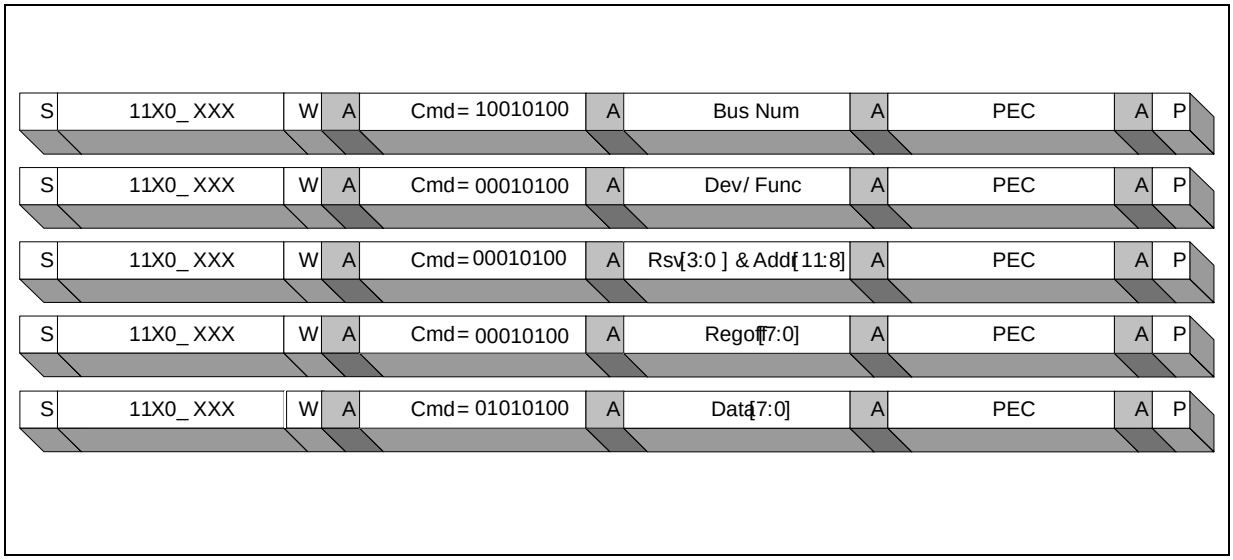

Figure 3-13. SMBus Memory Byte Write, PEC Enabled

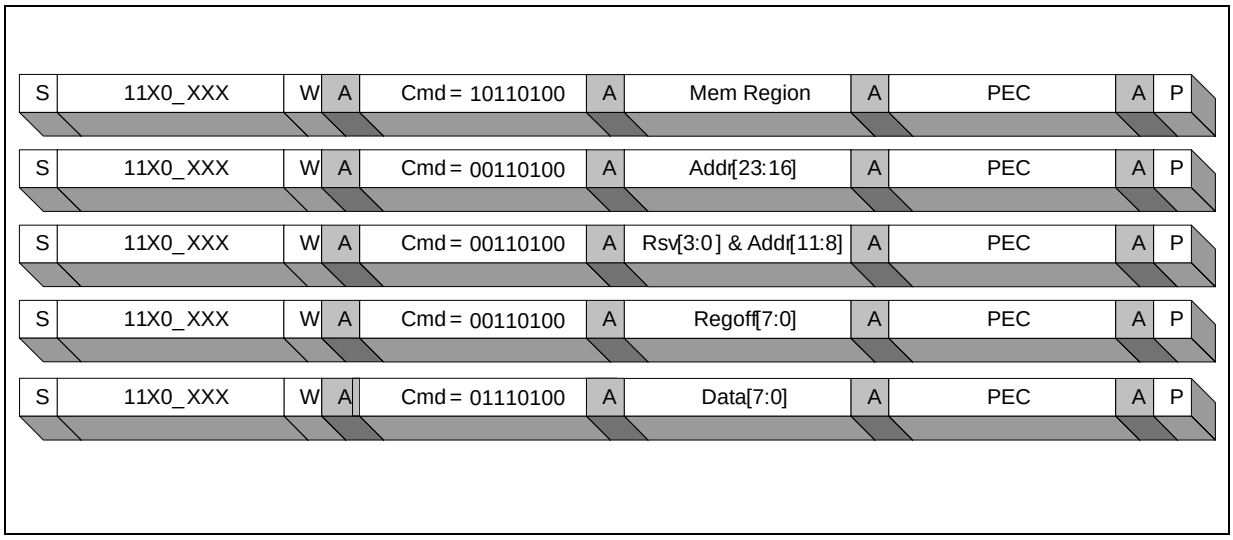

3.8 JTAG Test Access Port Interface

The IOH supports the 1149.1 (JTAG) Test Access Port (TAP) for test and debug. The TAP interface is a serial interface comprising five signals: TDI, TDO, TMS, TCK, and TRST_N. The JTAG interface frequency limit is 1/16 of the core frequency.

3.8.1 JTAG Configuration Register Access

The IOH provides a JTAG configuration access mechanism that allows a user to access any register in the IOH and south bridge components connected to the IOH. When the specified instruction is shifted into the IOH TAP, a configuration data chain is connected between TDI and TDO. A JTAG master controller (run control tool) will shift in the

appropriate request (read request or write with data). A serial to parallel converter makes a request to the configuration master in the IOH. When the request has been serviced (a read returns data, writes are posted) the request is completed. Data resides in the JTAG buffer waiting for another JTAG shift operation to extract the data.

A general configuration chain is connected to the configuration master in the IOH that is arbitrated for access in the outbound data path address decoder. Based on the results of the decode the transaction is sent to the appropriate PCI Express port. Upon receiving a completion to the transaction the original request is retired and the busy bit is cleared. Polling can be conducted on the JTAG chain to observe the busy bit, once it is cleared the data is available for reading.

The busy bit is set whenever a transaction is accepted by the slave. This is true for reads and writes but the affects may not be observable for writes. This means that since the writes are posted and the communication link is so slow the master should never see a busy condition. A time-out is associated with the transaction in progress. When the time-out expires a time-out error status is asserted.

The region field for a memory addressed CSR access is the same as the destination memory for the SMBus described earlier. Table 3-9 shows which regions are available to JTAG for reading or writing.

If a memory region address field is set to a reserved space the JTAG port will perform the following:

- The transaction is not executed
- The master abort error status is set

Table 3-9. Memory Region Address Field

Bit Field	Memory Region Address Selection
All others	Reserved
03h	IOAPIC memory region
02h	Reserved
01h	Reserved
00h	Intel QuickPath Interconnect CSR memory region

Table 3-10. JTAG Configuration Register Access (Sheet 1 of 2)

Bit	Description	Field Definition When Transaction Type = 0	Field Definition When Transaction Type = 1
71:64	**Data Byte 3** MSB of the read or write data byte. Data[31:24]	Data3	Data3
63:56	**Data Byte 2** MSB-1 of the read or write data byte. Data[23:16]	Data2	Data2
55:48	**Data Byte 1** LSB+1of the read or write data byte. Data[15:8]	Data1	Data1
47:40	**Data Byte 0** LSB of the read or write data byte. Data[7:0]	Data0	Data0
39:32	**Register Address[7:0]** Offset to a device on a bus or a memory addressed CSR.	Register[7:0]	Memory Address [7:0]

Table 3-10. JTAG Configuration Register Access (Sheet 2 of 2)

Bit	Description	Field Definition When Transaction Type = 0	Field Definition When Transaction Type = 1
31:29	**Function[2:0]** PCI equivalent of a function number to obtain access to register banks within a device. Or this field is part of an overall memory addressed CSR.	Function	Memory Address [10:8]
28:24	**Device ID[4:0]** PCI equivalent to uniquely identify a device on a bus. Or this field represents a memory addressed CSR with the Region selection.	Device	Memory Address [15:11]
23:16	**Bus number[7:0]** PCI equivalent of a bus number to recognize devices connected to a bus. Or this field contains the high order bits for the Region selection.	Bus	Memory Address [23:16]
15:12	**Extended Register Address[11:8]** Extended register offset to support PCI Express configuration space.	Extended register offset [11:8]	Memory Region high [7:4]
11:8	**Memory Region Low**	0	Memory Region low [7:0]
7:5	**Error Status** Assertion of this bits due to an error condition resulting from an incorrect access. If the bit is logic 0 then the transaction completed successfully. 000: No error 001: Memory Region encoding error. This bit is set if the memory region encoding is not orthogonal (one-hot encoding violation). 010: Completer abort 011: Master abort 100: JTAG time-out error. Remote config transaction time out expired. 101: Reserved 110: Reserved 111: Reserved		
4	**Transaction Type** Defines the type of transaction JTAG will access either config space registers or memory mapped registers. 0: Config type; use Bus/Dev.Func/Offset 1: Memory mapped type	0	1
3	**Busy Bit:** Set when read or write operation is in progress.		
2:0	**Command:** 000: NOP. Used in polling the chain to determine if the unit is busy. 001: write byte 010: write word 011: write dword 100: read dword 101: NOP, reserved 110: NOP, reserved 111: NOP, reserved		

3.8.2 JTAG Initiated Southbound Configuration Cycles

The IOH allows register access to I/O components connected to the IOH PCI Express ports.

3.8.3 Error Conditions

If the configuration was targeted towards a southbound PCI Express component and the transaction returned an error the error bit is set.

§

4 Intel® QuickPath Interconnect

4.1 Introduction

Intel QuickPath Interconnect is the cache-coherent interconnect between processors and the IOH. Intel QuickPath Interconnect is a proprietary interconnect specification for links-based processor and chipset components. The IOH uses a single Intel QuickPath Interconnect NodeID.

The IOH implements the Physical, Link, Routing, and Protocol layers of the Intel QuickPath Interconnect interface; however, the IOH implements only a subset of the Routing layer functionality.

Note: IOH performance requirements given in this chapter are based on a link speed of 6.4 GT/s.

4.2 Physical Layer

Figure 4-1 illustrates the scope of the physical layer on an Intel QuickPath Interconnect packet. The grayed out segment (phits) and CRC is not decoded by the Physical layer. One phit is transmitted per data clock and consists of 10 bits in half-width mode and 20 bits in full-width mode. The physical layer combines the phits into flits and passes flits to the link layer. Each flit consists of 80 bits. There are 80 bits for each flit, regardless of the port width.

Figure 4-1. Intel® QuickPath Interconnect Packet Visibility By The Physical Layer (Phit)

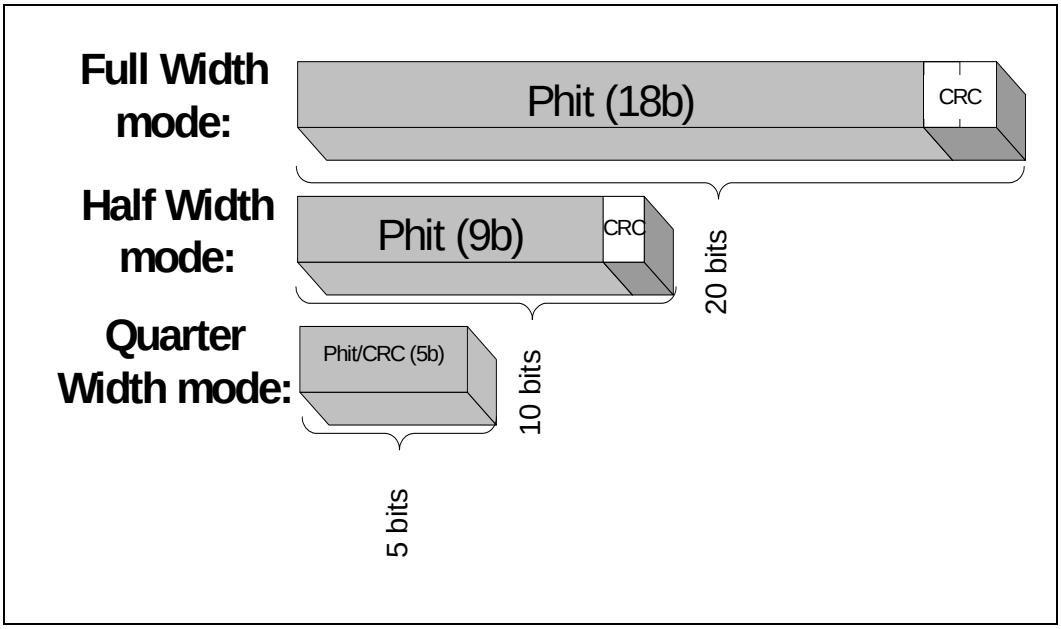

Note: Quarter width mode is only supported for the Intel Itanium processor 9300 series based platforms.

4.2.1 Supported Frequencies

The frequencies used on the Intel QuickPath Interconnect will be common for all ports. Support for the normal operating mode of 6.4, 5.86, or 4.8 GT/s data rate is provided by the physical layer.

4.2.2 Supported Widths

The IOH supports two full-width Intel QuickPath Interconnect ports. Each of these ports may also be connected as half-width ports with unused lanes unconnected. This allows the natural Self-Healing process to detect the active lanes. Bifurcation of one full-width ports into two half-width ports is not supported.

The IOH supports Intel® QuickPath Interconnect Dynamic Link Width Reduction which enables a degraded mode of link operation. This mode reduces a full-width port to half-width operation when transmission errors are detected. This occurs automatically in the Physical layer when reset occurs. The Physical layer runs a self test to look for bad bits. If any errors are discovered, Dynamic Link Width Reduction is invoked. The IOH allows manual selection of this mode of operation through Intel® QuickPath Interconnect configuration register settings.

The IOH supports combining quadrants 0 and 1, or, 2 and 3, to create a half-width port. A processor may support any quadrant combining when reducing to half-width. The agents on the Intel® QuickPath Interconnect bus negotiate in order to determine which quadrants are combined.

In the event of a failed clock, data bits 9 or 10, in priority order, will be used to send the clock. In this mode, the data bits in the corresponding quadrant are disabled. Bit 9 corresponds to quadrant 2, and bit 10 corresponds to quadrant 3. These bit positions apply to a full-width Intel® QuickPath Interconnect port. For a half-width Intel® QuickPath Interconnect port, the same physical pins on the IOH are used for clock failover. This implies that the half-width port will use data bit 9 for failover, and the other half-width port will use its bit 0. These pins require connection to the clock failover pins on the processor.

4.2.3 Initialization / Re-initialization

Initialization of the Physical layer can be invoked by any of the following:

- Component Reset (any type). Initialization type is always Default.
- Inband signaling (clock is no longer received). Initialization is always soft.
- Intel QuickPath Interconnect register QPIPHCTR.physical layer reset. Initialization type set by QPIPHCTR.Reset Modifier to soft or default.

Initialization will be stalled on a “Default” initialization if QPIPHCTR.PhyInitBegin is not set.

4.3 Link Layer

The Link layer provides independent flow control for each message class going to and from the Routing layer. VNA/VN0 differentiation is at the Link layer of the IOH. Support is provided for the SMP and EMP (including extended header) packet formats. EMP formats are only supported by Intel Itanium processor 9300 series. See Chapter 3 for supported Link Layer features.

Figure 4-2 shows the flit formats supported.

Figure 4-2. Intel® QuickPath Interconnect Packet Visibility By Link Layer (Flit)

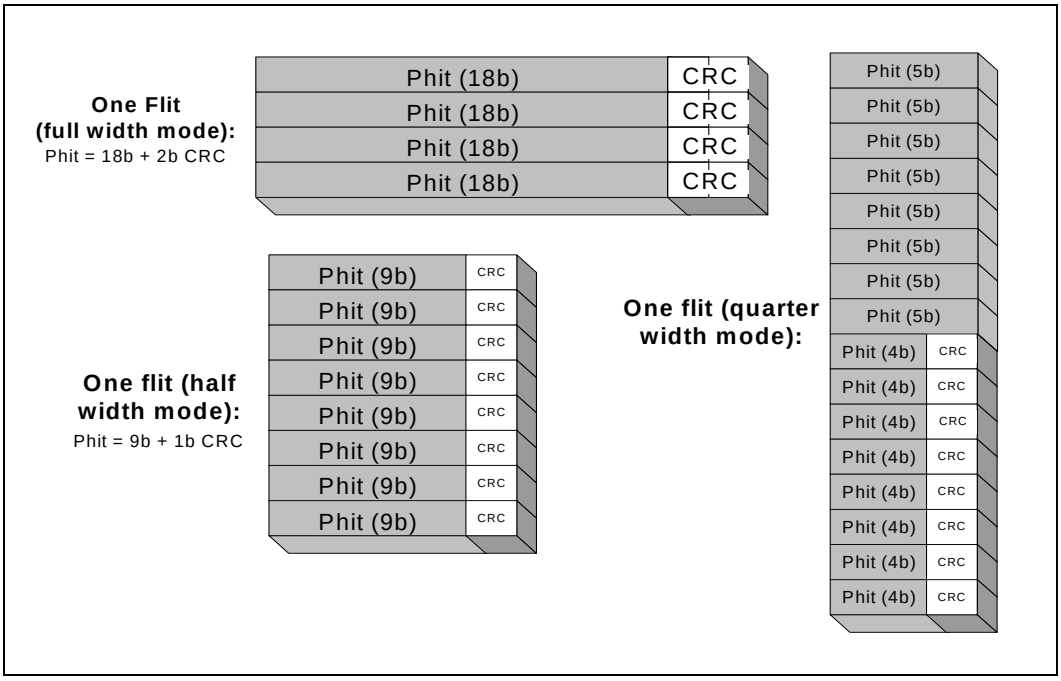

Note: Quarter width mode is only supported for the Intel Itanium processor 9300 series based platform.

4.3.1 Link Layer Initialization

During initialization, parameters are exchanged by hardware. These parameters are stored by the IOH and the information is used to setup link operation. Parameters can be accessed through the configuration registers outlined in Chapter 21. Refer to Table 4-1 for details on these parameter values.

Table 4-1. Link Layer Parameter Values (Sheet 1 of 2)

Parameter	Field	Value	Notes
0	LLR Wrap	0x7F	Equal max to LL Retry queue size - 1. Value does not change if LL Retry queue is reduced via configuration bits.
	NodeID[9:3]	b'0000 & NodeID[5:3]	NodeID[5:3] value comes from "QPIPCTRL: Intel QuickPath Interconnect Protocol Control" register. NodeID[9:6] will always be 0x0 for IOH.
	#NodeID	0	"0" corresponds to 1 NodeID in the IOH
	Port#	0 (port 0)	Corresponds to port# on the IOH.

Table 4-1. Link Layer Parameter Values (Sheet 2 of 2)

Parameter	Field	Value	Notes
1	L1 Power State	1	Supported[1]
	L0s Power State	1	Supported[1]
	Command Insert Interleave	0	Not supported as a receiver or a sender
	Scheduled Data Interleave: Send Requested	0	Not supported
	Scheduled Data Interleave: Receiver Requested	0	Not supported
	CRC Mode: Preferred Send Modes	01 or 10	Depends on Mode in QPILCL register
	CRC Mode: Receive Modes Supported	10	IOH supports receiving 8b or 16b rolling CRC
2 & 3	Caching Agent	1	Only one section will be filled in corresponding to the NodeID definition in QPIPCTRL register. Firmware Agent status depends on Firmware Strap. .
	Home Agent	0	
	I/O Proxy Agent	1	
	Router	0	
	Firmware Agent	0 or 1	
	Configuration Agent	1	
POC 0,1,2,3	RSVD	0	Reserved

Notes:

1. Not supported on Intel Itanium processor 9300 series

After Parameter exchange is completed, credits are exchanged via normal flow.

4.3.2 Initialization

Three conditions can start the initialization of the Link layer:

- Component reset (any type)
- A CSR configuration write to the re-init bit assigned to each Link layer defined in the Link Control register (QPILCL)
- Receipt of the parameter “ready-for-init” from the Intel QuickPath Interconnect interface

4.3.3 Packet Framing

Framing is accomplished through the “Opcode” and “Message Class” encoding in the first flit of every packet. The IOH supports both the Standard Intel QuickPath Interconnect header formats, configurable via the Intel QuickPath Interconnect Protocol Control register, “QPIPCTRL”.

4.3.4 Sending Credit Counter

The Link Layer supports a number of counters for sending requests and responses. The counters are separated based on VNA and VN0. VN0 has additional separation of counters for each Message Class. The counter for VNA is based on flits, whereas the VN0 counters are based on packets.

VNA will support an 8-bit counter with 0-255 flit credits, across all Message Classes.

VN0 credits, in many systems, are simply available for deadlock prevention, so a minimum of 1 credit will be given. In other receivers, VN0 may be the primary, or only, means of communication, so the IOH will support larger than the minimum size.

VN0 Home, NDR, DRS, NCS, and NCB all support a 4-bit counter, for 0-15 packet credits in each message class.

VN0 Snp message class supports a 6-bit counter for 0-63 packets. The larger counter is due to the need to support higher packet rate on this message class in source broadcast snooping protocol where each request can result in multiple snoops.

4.3.5 Retry Queue Depth

The retry queue depth is 128 flits deep to support round trip latency for a full width port from allocating the retry buffer to de-allocation. This allows for a round trip worst case delay of 512 UI (80 ns at 6.4 GT/s) round trip from retry buffer allocation to the Ack causing the retry buffer to be de-allocated.

4.3.6 Receiving Queue

The IOH has a receive queue that is 128 flits deep. This queue dynamically receives both VNA and VN0 packets. The number of credits that are sent on initialization to the other side of the link is determined by configuration registers. These registers must be programmed such that the total number of flits represented cannot exceed 128, otherwise overflow of the receive queue can occur. See Table 4-3 for details on Flits per Credit. For VN0, the flits per credit is always the size of the biggest packet.

Table 4-2. Credit Values Programming Example

Virtual Network - Message Class	Flits Per Credit - Standard Header	Max Flits Per Credit - Extended Header	Notes
VNA	1	1	VNA is shared by all message classes
VN0 - SNP	1	2	
VN0 - Hom	1	2	
VN0 - DRS	11	11	IOH does not expect to receive 11 flit NDR messages, but for simplification 11 flit should be used anyway.
VN0 - NDR	1	2	
VN0 - NCB	11	11	
VN0 - NCS	3	3	

At least one VN0 credit must be given for each message class that the IOH receives. VNA should normally be set to the maximum value of the remaining flits. With Standard Headers and VN0 set to one credit per Message Class (MC) this leaves 100 flit credits for VNA.

4.3.7 Link Error Protection

Error detection is done in the link layer using CRC. Two modes of CRC are supported: 16-bit rolling and 8-bit. The mode is determined as part of Link Level configuration. The 8-bit mode provides CRC protection per flit. The 16-bit rolling CRC protection transmits 8-bits of CRC in each flit which protects the current flit and previous flit. This requires the receiver to wait for one additional flit to determine if the current flit is good. This gives protection similar to that of a true 16-bit CRC.

4.3.7.1 Link Level Retry

Link level retry is supported using a circular FIFO retry queue, where every info or idle flit being sent is put into the queue. It is only removed from the queue when an acknowledgment is returned from the receiver. The acknowledgment indicates that the target Link layer received an info or idle flit error-free. If the target receives a flit with a CRC error, it returns a link level retry indication.

4.3.8 Message Class

The link layer defines eight Message Classes. The IOH supports five of those channels for receiving and six for sending. There is a restriction regarding home channel receive support as noted in the table. Table 4-3 shows the message class details.

Arbitration for sending requests between message classes uses a simple round robin between classes with available credits.

Table 4-3. Supported Intel QuickPath Interconnect Message Classes

Message Class	VC Description	Send Support	Receive Support
SNP	Snoop Channel. Used for snoop commands to caching agents.	Yes	Yes
HOM	Home Channel. Used by coherent home nodes for requests and snoop responses to home. Channel is preallocated and guaranteed to sink all requests and responses allowed on this channel.	Yes	Yes[1]
DRS	Response Channel Data. Used for responses with data and for EWB data packets to home nodes. This channel must also be guaranteed to sink at a receiver without dependence on other VC.	Yes	Yes
NDR	Response Channel Non-Data.	Yes	Yes
NCB	Non-Coherent Bypass.	Yes	Yes
NCS	Non-Coherent Standard.	Yes	Yes

Notes:

1. Only supported in Route-Through modes

4.3.9 Link Level Credit Return Policy

The credit return policy requires that when a packet is removed from the Link layer receive queue, the credit for that packet/flit be returned to the sender. Credits for VNA are tracked on a flit granularity, while VN0 credits are tracked on a packet granularity.

4.3.10 Ordering Requirements

The Link layer keeps each Message Class ordering independent. Credit management is kept independent on VN0. This ensures that each Message Class may bypass the other in blocking conditions.

Ordering is not assumed within a single Message Class, but is not explicitly disallowed. The Home Message Class is an exception to this rule, because it requires ordering between transactions corresponding to the same cache line address. This requirement is driven from a Protocol layer assumption on this Message Class for resolving cache line conflicts.

VNA and VN0 follow similar ordering to the Message Class. With Home message class requiring ordering across VNA/VN0 for the same cache line. All other message classes have no ordering requirement.

It is up to the Protocol Layer to ensure against starvation between different Message Classes.

4.4 Routing Layer

A direct routing table is supported in IOH for requests from IOH. This routing table is 32 or 64 entries deep, corresponding to the 5-bit or 6-bit NodeIDs for Intel Xeon processor 7500 series (Boxboro-EX) and Intel Itanium processor 9300 series, respectively. Alternate and Adaptive routing is not supported.

See Chapter 16 for details on error logging of unexpected transactions.

4.4.1 Outbound Routing

This section discusses how packets received by the IOH are routed. There are multiple modes of routing requests received by the IOH over Intel QuickPath Interconnect. These modes exist in order to meet the needs of our different platform configurations. Selection between the routing modes is done through configuration bits. Defaults vary depending on the strapping of the IOH.

4.4.1.1 End-Point Only

End-Point Only means the IOH is always the final destination of packets. In this mode, all traffic received on Intel QuickPath Interconnect must have the Destination NodeID (DNID) equal to the IOH's NodeID, with the exception of routing snoop packets. In snoop router broadcast mode, the DNID will be set to the home NodeID and DNID checking will be disabled.

4.5 Protocol Layer

The Protocol Layer is responsible for translating requests from the core into the Intel QuickPath Interconnect domain and for maintaining Intel QuickPath Interconnect protocol semantics. The IOH is a fully-compatible Intel QuickPath Interconnect caching agent. It is also a fully-compliant firmware agent, configuration agent, and I/O proxy agent for non-coherent I/O traffic. By appropriately programming the PeerAgents list, the IOH will operate in the Intel QuickPath Interconnect in-order coherent protocol with source issued snooping of up to 31 or 63 peer caching agents for either Intel Xeon processor 7500 series or Intel Itanium processor 9300 series (maximum size of local cluster using 5 or 6-bit NodeID). By configuring the PeerAgents list to be null, the IOH will operate in system configurations which require home issued snooping, with no inherent limitation to the number of peer caching agents in this mode. The limitation is the source address decoder's ability to target the home agents.

Lock arbiter support in IA-32 systems is provided for up to eight CPU lock requesters. Systems that require support for more lock requesters need to implement a separate lock arbiter agent. Only the legacy IOH will be source of a lock as a result of PHold on ESI.

The Protocol layer supports 64 byte cache lines. There is an assumption in this section that all transactions from PCI Express will be broken up into 64-byte aligned requests to match Intel QuickPath Interconnect packet size and alignment requirements. Transactions of less than a cacheline are also supported.

4.5.1 NodeID Assignment

The IOH must have a NodeID assigned before it can begin normal operation. This NodeID will be assigned by strap pins. A maximum of 5-bits of NodeID is provided for general use in the SMP profile. In the EMP profile, the IOH provides capability for a 6-bit NodeID.

After Reset, the IOH will use three strapping pins (NodeID[2:0]) to assign the NodeID[4:2]. NodeID[5] and NodeID[1:0] will default to '0'. The NodeID may be overwritten by config writes from SMBus.

See Chapter 21 for details on configuration for NodeIDs.

4.5.1.1 Component NodeID Assignment

The Intel Xeon processor 7500 series requires that IOH NodeID bits [1:0] = "00." The processor will use the other three combinations of bits [1:0] for its internal 3 NodeID assignments.

The Intel Itanium processor 9300 series requires that IOH NodeID bits [2:0] = "000" or "100" or "110". The processor will use the other three combinations of bits [1:0] for its internal 3 NodeID assignments. Figure 4-3 shows an example of this type of assignment. The Intel Itanium processor 9300 series is using 5 NodeIDs with NodeID[2:0] reserving the encodings 001, 010, 011, 101, and 111.

Figure 4-3. Example NodeID Assignment 4-Socket, 2-IOH Platform (For Intel Itanium Processor 9300 Series based Platform)

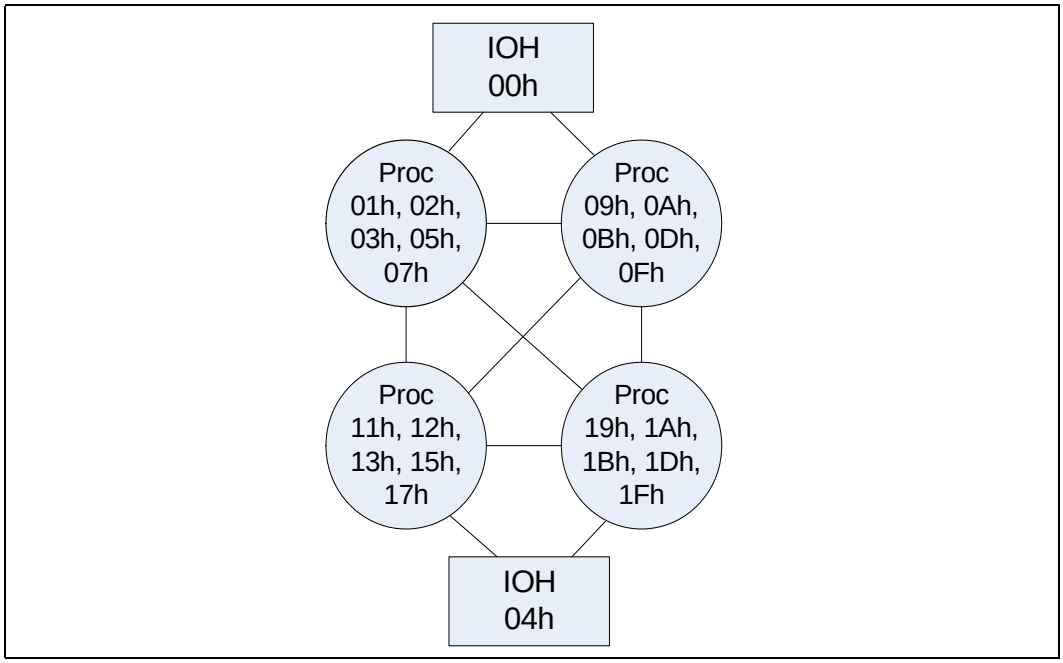

4.5.2 Source Address Decoder (SAD)

Every inbound request and outbound snoop response going to Intel QuickPath Interconnect must go through the source address decoder to identify the home NodeID. For inbound requests, the home NodeID is the target of the request. For snoop requests received by the IOH, the home NodeID is not included in the snoop packet, but the home NodeID is required in the snoop response.

The source address decoder is only used for decode of the DRAM address ranges and APIC targets to find the correct home NodeID. Other ranges including any protected memory holes are decoded elsewhere. See Chapter 7 for details on the address map.

The source address decoder in the IOH is designed to scale up to four sockets, each having one or two Home Agent NodeIDs. Scaling beyond four sockets is possible with a limit corresponding to the 5-bit or 6-bit NodeID, but memory interleaving across more than eight Home Agent NodeIDs is not supported. Support is provided for 3 peer IOH agents, or 1 peer IOH and 2 node controllers.

The description of the source address decoder requires that some new terms be defined:

- Memory Address – Memory address range used for coherent DRAM, MMIO, CSR.
- Bus Number Routing – Each IOH will be assigned a contiguous range of Bus numbers. This is used for routing P2P Completions and P2P Messages.
- Physical Address (PA) – This is the address field seen on the Intel QuickPath Interconnect and in the IOH, a distinction from the processor core that operates on the virtual address.

There are two basic spaces that use a source address decoder: Memory Address and PCI Express Bus Number. Each space will be decoded separately based on the transaction type.

4.5.2.1 NodeID Generation

This section provides an overview of how the source address decoder generates the NodeID. There are assumed fields for each decoder entry. In the case of some special decoder ranges, the fields in the decoder may be fixed or shifted to match different address ranges, but the basic flow is similar across all ranges.

Table 4-4 defines the fields used per memory source address decoder. The process for using these fields to generate a NodeID is:

1. Match Range
2. Select TargetID from TargetID List using the Interleave Select address bit(s)NodeID[4:0] is directly assigned from the TargetID for the SMP profile, and NodeID[5:0] is directly assigned from the TargetID for the EMP profile

4.5.2.2 Memory Decoder

The MMIO ranges will never use low-order interleave, which means that all targetID entries must be programmed equivalently.

Note: The memory source address decoder in IOH contains no attribute, unlike the processor SAD. All attribute decode (MMIO, memory, NC-memory) is done with coarse range decoding prior to the request reaching the Source Address Decoder. See Chapter 7 for details on the coarse decode ranges.

Table 4-4. Memory Address Decoder Fields

Field Name	Number of Bits	Description
Valid	1	Enables the source address decoder entry
Interleave Select	3	Determines how targets are interleaved across the range. Sys_Interleave value is set globally using the "QPIPINT: Intel QuickPath Interconnect Protocol Interleave Mask" register. Modes: 0x0 - Addr[8:6] 0x1 - Addr[8:7], Sys_Interleave 0x2 - Addr[9:8], Sys_Interleave 0x3 - Addr[8:6] XOR Addr[18:16] 0x4 - (Addr[8:7] XOR Addr[18:17]), Sys_Interleave 0x5 - Addr[8:6]: Similar to 0x0 encoding but the nodeid[1] will be overwritten by the Sys_Interleave bit (as calculated per the CSR setting), i.e. final dnodeid = dnodeid[5:2], Sys_Interleave, dnodeid[0]. 0x6 - Addr[8:6] XOR Addr[18:16]: Similar to 0x3 encoding but the nodeid[1] will be overwritten by the Sys_Interleave bit (as calculated per the CSR setting), i.e. final dnodeid = dnodeid[5:2], Sys_Interleave, dnodeid[0] >0x6 - Reserved
Address Base	25	Starting address of the Range specified as PA[50:26] (64 MB alignment)
Address Limit	25	Ending address of the Range specified as PA[50:26] (64 MB alignment)
TargetID List	48	A list of eight 6-bit TargetID values

4.5.2.3 Interleaving Modes

There are five interleave modes, with the first 4 referencing DRAM-only configurations.

1. Low order: low 3 bits are looked up in a table

This is commonly configured for 1, 2, 4, or 8 way interleaving.

2. Low order + Low hash: Similar to low order, but the low order nodeID bit is replaced with parity(PA<19,13,10,6>)

This is conceptually a socket-level interleave, where accesses to a socket are spread across the 2 memory controllers on a socket in a hashed manner. This should be done as a maximum 4-way socket interleave + hash, resulting in an 8-way maximum interleave.

3. Mid order: low order(PA<8:6>) XOR PA<18:16> is looked up in a table

This mode is designed to spread accesses across DRAM banks.

4. Mid order + Low hash: as above -but the low order nodeID bit is replaced with parity(PA<19,13,10,6>)
5. High order: 3 MSBs of region are looked up in a table, and which bits are determined by the region size.

Only used for IO regions in IO decoder (MMIOL, PCI CFG, legacy IO, and so on).

4.5.2.4 I/O Decoder

The I/O decoder contains a number of specialized regions. Table 4-5 defines the requirements of each special decoder.

MMIOL and MMIOH use standard memory decoders.

Table 4-5. I/O Decoder Entries

Field	Type	Address Base/Range	Size	Attr	Interleave	CSR Register	Comments
VGA/CSeg	Memory	000A_0000	128K	MMIO	None	""QPIPVGASAD: QPI Protocol VGA Source Address Decode""	Space can be disabled
LocalxAPIC	Memory	FEE0_0000	1M	IPI	8 deep table	"QPIPAPICSAD: Intel QuickPath Interconnect Protocol APIC Source Address Decode"	Which bits of address select the table entry is variable
Special Requests Targeting ESI	Memory	N/A	N/A	Varies	None	""QPIPSUBSAD: Intel QuickPath Interconnect Protocol Subtractive Source Address Decode""	This is used for P2P requests that target a remote ESI port. Can be disabled if no remote ESI port exists.
Bus Number	PCIe Bus #	0	256	Bus#	8 deep table	""QPIPBUSSAD: Intel QPI Protocol Bus# Source Address Decode""	16 or 32 bus# per TargetID
DCA Tag[1]	NodeID	0	64	NodeID	Direct Mapping	"QPIPDCASAD: Intel QuickPath Interconnect Protocol DCA Source Address Decode"	Direct mapping modes for tag to NodeID.

Note:
1. The DCA tag is only valid for Intel Xeon processor 7500 series.

4.5.2.4.1 APIC ID Decode

The APIC ID discussed in this section is based on the Intel QuickPath Interconnect packet definition for those bits.

APIC ID decode is used to determine the Target NodeID for non-broadcast interrupts. 3 bits of the APIC ID is used to select from 8 targets. Selection of the APIC ID bits is dependent on the processor. Modes exist within the APIC ID decode register to select the appropriate bits. The bits that are used are also dependent on the type of interrupt (physical or extend logical). See Chapter 8 for a detailed description of the bit definitions.

In a hierarchical MP system, certain bits of the APIC ID are matched to determine whether the interrupt is targeting the local or remote cluster. If not matched, the interrupts target the specified "Remote NodeID". Otherwise, the standard target list is used to determine the target NodeID. See Chapter 8 for a detailed description of the bit definitions.

4.5.2.4.2 Bus Number

Bus Number decode is used for peer-to-peer completions and peer-to-peer Messages. It is decoded using a single decoder that is interleaved across all possible 256 PCI Express bus numbers using the same methodology as the Memory Decoder. This is done such that each entry in the target list is allocated 16 or 32 contiguous bus numbers (in 32 mode: entry 0 - Bus0-31, entry 1 - Bus32-63...). When in "16 Buses per entry" mode, there is a base Bus# of either 0 or 128. In this mode, if the Bus# does not fall within the 128 Bus# range, then the request is sent to the Remote NodeID which is assigned to the hierarchical controller. The Remote NodeID is only used in this mode.

4.5.2.4.3 Subtractive Decode

Requests that are subtractively decoded in the datapath or PCI Express cluster are sent to the legacy ESI port. When the legacy ESI port is located on a remote IOH over the Intel QuickPath Interconnect this decoder simply specifies the NodeID of the peer IOH that is targeted. If this decoder is disabled, then legacy DMI is not available over Intel QPI, and any subtractive decoded request that is received by the Intel QPI cluster will result in an error.

4.5.2.4.4 DCA Tag

DCA enabled writes will result in a PrefetchHint message on Intel QPI that will be sent to a caching agent on Intel QPI. The NodeID of the caching agent is determined by the PCI Express Tag. The IOH will support a number of modes for tag bits which correspond to NodeID bits. See the "QPIPDCASAD: Intel QuickPath Interconnect Protocol DCA Source Address Decode" register for details.

4.5.3 Special Response Status

The Intel QuickPath Interconnect includes two response types: normal and failed. Normal is the default; failed response is described below.

On receiving a failed response status the IOH will continue to process the request in the standard manner, but the failed status is forwarded with the completion. This response status should also be logged as an error as described in Chapter 16.

The IOH will send the failed response to the Intel QuickPath Interconnect for some failed response types from PCI Express. See Chapter 16 for error translation requirements.

4.5.4 Abort Time-out

An AbortTO response received at the IOH will cause a reset of the time-out counter in the Outgoing Request Buffer (ORB). This response could be received to any request or to an empty ORB entry. This is because the Completion of a request may bypass the AbortTO, which will result in the entry be de-allocated and may be empty or re-used by a different request by the time the AbortTO is seen at the ORB.

The AbortTO will be sent on QPI for an outbound NcCfgRd/Wr when the time pending in IOH exceeds a time threshold. The AbortTO response does not complete the transaction at the IOH or in the original sender. Because support for this response status is an optional feature on QuickPath Interconnect, there is a configuration bit to disable it (QPIPCTRL register). This register also controls the frequency of the AbortTO when it is enabled. The frequency may vary by up to +100% of this programmed value. This response will be sent repeatedly at the designated threshold until the request is completed or aborted.

The programmable values supported for AbortTO threshold are: 5uS, 327 µS, 41 mS. These values assume a 400 MHz core clock. Scaling will occur when the core clock speed deviates from this assumption.

4.5.5 Illegal Completion/Response/Request

IOH explicitly checks all transaction for compliance to the request-response Table 4-6, Table 4-7, Table 4-8, and Table 4-9 in this chapter. If an illegal response is detected it is logged the illegal packet is dropped. See Chapter 16, "Reliability, Availability, Serviceability (RAS)" for details on error logging.

4.5.6 Inbound Coherent Transactions

The IOH will only send a subset of the coherent transactions supported by the Intel QuickPath Interconnect. This section will describe only the transactions that are considered coherent. The determination of Coherent versus Non-Coherent is made by the address decode. If a transaction is determined coherent by address decode, it may still be changed to non-coherent as a result of its PCI Express attributes (see Table 4-6 for details).

Table 4-6. Inbound Coherent Transactions and Responses

Core Request	Intel QuickPath Interconnect Transaction	Spawned Snoop[1]	Non-Conflict Responses	Final Cache State	Conflict Response
Coh-Rd	RdCur[2, 7]	SnpCur	DataC_I, Cmp, DataC_I_Cmp	I	FrcAckCnflt, DataC_I_FrcAckCnflt
Coh-Rd	RdCode[2]	SnpCode	DataC_S, Cmp[7], DataC_S_Cmp[7] DataC_F, Cmp[6], DataC_F_Cmp[6]	I[3]	FrcAckCnflt, DataC_[F[6],S[7]]_FrcAckCnflt
RFO[4]	InvItoE[5]	SnpInvItoE	Cmp, Gnt_Cmp	E	FrcAckCnflt, Gnt_FrcAckCnflt
EWB - Full	WbMtoI and WbIData	N/A	Cmp	I	FrcAckCnflt
EWB - Partial	WbMtoI and WbIDataPtl	N/A	Cmp	I	FrcAckCnflt

Notes:
1. See Section 4.5.8 for details on how snoops are sent out
2. Based on RdCur versus RdCode Mode, see Section 4.5.8
3. State immediately degrades from
4. RFO = Request For Ownership
5. Flow selection based on Write flow mode described in Section 4.5.8
6. platform only

4.5.6.1 Snooping Modes

Intel QuickPath Interconnect protocol has assumptions that require the home agent to send snoops for any agent under directory control. Second, the home agent in a processor sending snoops for the IOH can only spawn a single snoop.

When IOH is in the router broadcast mode, it sends a single snoop targeting the home agent's NodeID. The processor's router will ensure that snoops are correctly sent to all caching agents. In this mode the DNID on incoming snoop packets will be equal to the home NodeID. In this mode, checking DNID equal to the IOH's NodeID will be disabled for incoming snoops.

4.5.6.2 RdCur versus RdCode

When the IOH issues a read request to coherent space, it will not cache the data received in the completion, but it does need to have the latest coherent copy available. There are Intel QuickPath Interconnect commands that supports this behavior; RdCur directly supports this and RdCode indirectly supports it. RdCur is defined such that the requestor's final state is always I. For RdCode the requestor's state is always given as F or S, but the IOH can immediately degrade F or S to I. based platforms.

The RdCode/RdCur mode is set only at boot, and not modified during normal operation. RdCode requires differences in how the IOH responds to conflicting snoops versus the RdCur conflict requirements. See Section 4.10 for details on conflict handling.

4.5.6.3 Directory Update Requirements

Every Request For Ownership (RFO) that is sent to get exclusive ownership of a line (E state) will have a corresponding EWB which will transition the directory and the modified line in the IOH to I-state. Exceptions to this rule can occur when an error is detected in the PCI Express packet that initiated the RFO request. In this case, IOH will send an EWB-partial with none of the Byte Enables set. This allows directories or snoop filters in the processors to be kept in sync with the IOH's cache.

For coherent memory reads the IOH will use RdCur which results in the cache line in the IOH in I-state and the directory in I-state. If RdCode is used then an inconsistency could occur between the directory and the IOH. The IOH will not support any special Directory Update command for this mode of operation. If RdCode is used with a directory, then additional snooping of the IOH will occur because the directory will show IOH with F/S state. The protocol allows S/F state to be dropped silently, so that coherency is not violated.

4.5.7 Inbound Non-Coherent Transactions

The IOH sends transactions as non-coherent transactions on the Intel QuickPath Interconnect as specified in Table 4-7.

Table 4-7. Non-Coherent Inbound Transactions Supported

Core Source	Core Type	Intel® QPI Transaction	Intel® QPI Completion	Targets	Notes
PCI Express, DMA	NC Read DRAM	NonSnpRd	DataC_I_Cmp, DataC_I, Cmp	DRAM Home	
PCI Express, DMA	NC Write DRAM (Full Line)	NonSnpWr & NonSnpWrData	Cmp	DRAM Home	
PCI Express, DMA	NC Write DRAM (Partial)	NonSnpWr & NonSnpWrDataPtl	Cmp	DRAM Home	
PCI Express	Peer-to-peer Deferred	NcP2PS	Cmp	IOH	
PCI Express, DMA	Peer-to-peer Posted	NcP2PB	Cmp	IOH	
PCI Express	Interrupt	IntPhysical, IntLogical[1]	Cmp	Processor Interrupt Agent (sometimes Broadcast)	IA-32 requires broadcast for some interrupt modes
<pins> or ESI	Virtual Wire	NcMsgB-VLW[1]	CmpD	Broadcast to all Processor agents	Broadcast using NC Broadcast list
ESI	Power Management	NcMsgB-PmReq[1]	CmpD	Broadcast to all Processor agents	Sleep state power management comes from ESI port. See Chapter 10 for more details
Lock Arbiter (Intel QPI)	Freeze1, Freeze2, UnFreeze1, UnFreeze2	NcMsgS-StopReq1, NcMsgS-StopReq2, NcMsgS-StartReq1, NcMsgB-StartReq2	CmpD	Broadcast to all Processor or all IOH agents (depending on phase)[1] Broadcast to all IOH agents[2]	Lock Flow only active for IA-32 systems. See Section 4.7 for details
PCI Express	DCA Hint	PrefetchHint[1]	Cmp	Processor Caching Agents	Destination NodeID based on PCI Express tag encoding.

Notes:
1. Intel Xeon processor 7500 series-based platform (Boxboro-EX platform) only
2. Intel Itanium processor 9300 series-based platform only

4.5.7.1 Non-Coherent Broadcast

Support is provided for a non-coherent broadcast list to deal with non-coherent requests that are broadcast to multiple agents. Transaction types that use this flow:

- Broadcast Interrupts
- Power management requests
- Lock flow
- Global SMI
- Quiescence flow
- VLW (Virtual Legacy Wires) for Intel Xeon processor 7500 series based platform only

There are three non-coherent broadcast lists:

- The primary list is the “non-coherent broadcast list” which is used for power management, Broadcast Interrupts, and VLW. This list will be programmed to include all processors in the partition.
- The Lock Arbiter list of IOHs
- The Lock Arbiter list of CPUs

The broadcast lists are implemented with a 32-bit vector (or 64-bit vector for the EMP profile) corresponding to NodeIDs 0-31 (or 0-63 for EMP). Each bit in this vector corresponds to a destination NodeID receiving the broadcast.

The Transaction ID (TID) allocation scheme used by the IOH results in a unique TID for each non-coherent request that is broadcast. See Section 4.9.2 for additional details on the TID allocation.

Broadcasts to the IOH’s local NodeID will only be spawned internally and do not appear on the Intel QuickPath Interconnect bus.

4.5.7.2 Lock Arbiter

StopReq1&2 and StartReq1&2 are broadcast to all agents specified in the quiescence list. Details on the lock arbiter are found in Section 4.7.

4.5.7.3 Legacy Messages

Legacy messages are sent to the target NodeID based on address decoder output. See Section 4.5.2, “Source Address Decoder (SAD)” on page 67 for more details.

VLW messages from ESI are broadcast to all processor targets specified in the NC Broadcast list.

4.5.8 Outbound Snoops

Outbound clean snoops are critical to system performance when the IOH is included as a broadcast peer (no IOH directory/snoop filter). In this case, the expectation is that a clean response (RspI) will result from the majority of snoops because of the small size of the IOH write cache. Because of this, the IOH must keep the clean snoop latency to a minimum. Snoop conditions that hit in the Write Cache or conflict with pending requests do not have the strict latency requirements.

This section does not address snoop conflict cases, see Section 4.10.2 for details on conflicts.

Table 4-8. Snoops Supported and State Transitions

Snoop	IOH Current State	IOH Next State	Response Requestor	Response to Home Node	Notes
Snp*	M-full line	I	---	RspIWb + WbIData	
Snp*	M-partial[1]	I	---	RspIWb + WbIDataPtl	
Snp*	E/I	I	--	RspI	IOH will always degrade to I from E state because no data exists

Note:
1. Partial is defined as a line that does not have all bytes modified by inbound writes.

4.5.9 Outbound Non-Coherent

IOH will support a large number of outbound non-coherent transactions.

Table 4-9. Protocol Transactions Supported (Sheet 1 of 2)

Intel QuickPath Interconnect Type	Core Target	Intel QuickPath Interconnect Transaction	Intel QuickPath Interconnect Completion	Notes
Special	Local Intel QuickPath Interconnect Cluster	NcMsgB/S-<other>	CmpD	Any NcMsg* that is not explicitly declared in this table will result in a CmpD with no action from the IOH.
		IntPrioUpd	Cmp	Monitor these requests to find interrupt deliver mode. See Chapter 8, "Interrupts" for details.
Interrupt		IntPhysical, IntLogical	Cmp	No Action, just send a Cmp
Debug		DebugData		
IntAck	ESI	IntAck	DataNc	
Messages	ESI	FERR	Cmp	Target is FERR pin and the completion sent after it is asserted
Messages	ESI	NcMsgS-Shutdown NcMsgB-GPE NcMsgB-CPEI	CmpD	Posted to ESI
Config	Local Config, PCI Express, ESI	NcCfgWr	Cmp	
		NcCfgRd	DataNc	
Broadcast	Broadcast to all ESI, PCI Express	NcMsgB-EOI	CmpD	Broadcast to all active PCI Express and ESI ports. Cmp delivered after posting to all PCI Express ports.

Table 4-9. Protocol Transactions Supported (Sheet 2 of 2)

Intel QuickPath Interconnect Type	Core Target	Intel QuickPath Interconnect Transaction	Intel QuickPath Interconnect Completion	Notes
MMIO	PCI Express, ESI	NcWrPtl, WcWrPtl	Cmp	Includes 64 Byte Enables. Needs to be broken up into PCI Express compliant sizes. Completion sent on Intel QuickPath Interconnect after all writes are PCI ordered. WcWrPtl will use identical flow to NcWrPtl.
		NcWr, WcWr	Cmp	Cmp Sent after PCI ordered to PCI Express. WcWr will use identical flow to NcWr.
		NcRd	DataNc	
		NcRdPtl	DataNc	Sent for requests less then 64 bytes. 8 Byte Enables apply only when length = 0-8 bytes.
Legacy I/O		NcIOWr	Cmp	
		NcIORd	DataNc	Length is 4 bytes, but could cross 8-byte boundary. Needs to be broken up internally to meet PCI Express 4-byte boundary requirements for IORd.
Peer-to-Peer		NcP2PS, NcP2PB	Cmp	See Section 4.5.9.2 for more information.
Lock	Lock Arbiter	NcMsgS-ProcLock, NcMsgS-ProcSplitLock, NcMsgS-Quiesce, NcMsgS-Unlock	CmpD	See Section 4.7 for details
	Core logic in IOH	NcMsgS-StopReq1, NcMsgS-StopReq2, NcMsgS-StopReq1, NcMsgB-StopReq2	CmpD	

4.5.9.1 Outbound Non-Coherent Request Table

Outbound non-coherent requests use a table to hold Intel QuickPath Interconnect state information while the request is pending to the Datapath and I/O interface clusters. The IOH table stores all NodeID and Transaction ID information need to generate the Completion on the Intel QuickPath Interconnect. The table has the following attributes:

- Reserved Entry for a request received from the NCB Virtual Channel. But no reservation is necessary for NCS. This is necessary to avoid deadlock with peer-to-peer requests.
- The depth needs to support the loaded round trip latency for posting a packet to PCI Express at the max outbound write bandwidth from the Intel QuickPath Interconnect.
- 8 entries for pending outbound non-posted.

4.5.9.2 Peer-to-Peer Across Intel QuickPath Interconnect

Intel QuickPath Interconnect translates some peer-to-peer transactions between IOHs into a special NcP2PS for non-posted or NcP2PB for posted packets on Intel QuickPath Interconnect. An exception is for NcIORd/Wr and NcCfgRd/Wr, which will use the standard transaction type.

4.6 Profile Support

The IOH can support a variety of small and large system configurations through the use of configuration registers.

Table 4-10 and Table 4-11 defines the features that are used in setting the profile and the corresponding register requirements.

Enabling extended headers requires the IOH to be connected to a BMC. After reset the BMC must set the extended header enable register before Intel QuickPath Interconnect is allowed to initialize. This capability pertains to the Intel Itanium processor 9300 series-based platform only.

The default values for these configuration registers are set to the MP system configuration, as noted in Table 4-10 and Table 4-11.

Table 4-10. Profile Control – Intel Xeon Processor 7500 Series based Platform Only

Feature	Register	SMP Profile	Notes
Source Address decoder enable	"QPIPCTRL: Intel QuickPath Interconnect Protocol Control"	enable	
Address bits	"QPIPMADDATA: Intel QuickPath Interconnect Protocol Memory Address Decode Data"	<=46 bits [45:0]	Can be reduced from the max to match a processor's support.
Address bits 45:41	"QPIPCTRL: Intel QuickPath Interconnect Protocol Control"	enable	Must be enabled if Extended header is enabled. When disabled Addr[42:41] become RSVD_CHK, and Addr[45:43] become critical_chunk. The critical_chunk field is ignore by IOH and treated as 000.
NodeID width	"QPIPCTRL: Intel QuickPath Interconnect Protocol Control"	5-bit	Other NodeID bits will be set to zero, and will be interpreted as zero when received.
Remote P2P	<I/O SAD>[1]	enable	
Poison	"QPIPCTRL: Intel QuickPath Interconnect Protocol Control"	enable	When disabled any uncorrectable data error will be treated identically to a header parity.
Routing Table	"QPIRTBL : Intel QuickPath Interconnect Routing Table"	<prog>	
Viral support	"QPIPCTRL: Intel QuickPath Interconnect Protocol Control"	enable	Masks both sending and receiving viral.

Notes:

1. See Table 4-5 for details on which registers are affected.

Table 4-11. Profile Control – Intel Itanium Processor 9300 Series-based Platform Only (Sheet 1 of 2)

Feature	Register	SMP Profile	EMP Profile	Notes
Source Address decoder enable	"QPIPCTRL: Intel QuickPath Interconnect Protocol Control"	enable	enable	
Address bits	"QPIPMADDATA: Intel QuickPath Interconnect Protocol Memory Address Decode Data"	<=46 bits [45:0]	<=51 bits [50:0]	Can be reduced from the max to match a processor's support. To get more then 46-bits in EMP you need to enable extended header mode.
Address bits 45:41	"QPIPCTRL: Intel QuickPath Interconnect Protocol Control"	enable	enable	Must be enabled if Extended header is enabled. When disabled Addr[42:41] become RSVD_CHK, and Addr[45:43] become critical_chunk. The critical_chunk field is ignore by IOH and treated as 000.

Table 4-11. Profile Control – Intel Itanium Processor 9300 Series-based Platform Only (Sheet 2 of 2)

Feature	Register	SMP Profile	EMP Profile	Notes
NodeID width	"QPIPCTRL: Intel QuickPath Interconnect Protocol Control"	5-bit	5-bit/6-bit	Other NodeID bits will be set to zero, and will be interpreted as zero when received. 6-bit NodeID is supported only with Extended headers are enabled.
Remote P2P	<I/O SAD>[1]	enable	enable	
Extended Header	"QPIPCTRL: Intel QuickPath Interconnect Protocol Control"	disable	<prog>	Extended headers are optionally supported in EMP profile. To achieve more the 46 bits of addressing this is required.
Poison	"QPIPCTRL: Intel QuickPath Interconnect Protocol Control"	enable	enable	When disabled any uncorrectable data error will be treated identically to a header parity.
Routing Table	"QPIRTBL : Intel QuickPath Interconnect Routing Table"	<prog>	<prog>	
Viral support	"QPIPCTRL: Intel QuickPath Interconnect Protocol Control"	enable	enable	Masks both sending and receiving viral.

Notes:

1. See Table 4-5 for details on which registers are affected.

4.7 Lock Arbiter

Lock Arbiter is a central system resource used for coordinating lock and quiescence flows on Intel QuickPath Interconnect. There is a single lock arbiter in the IOH which can accommodate a maximum of 8 simultaneous issues and 63 NodeID targets. IOH will not support sending PHold on Intel QuickPath Interconnect.

The requests from Intel QuickPath Interconnect that correspond to a System Lock are: NcMsgS-ProcLock, and NcMsgS-ProcSplitLock. The System Unlock message corresponds to NcMsgS-Unlock.

PHold is also supported from ESI and is queued sequentially with the System Lock requests from Intel QPI. PHold support in MP is supported, but is restricted to the ESI port connected to the legacy IOH.

VC1 traffic from DMI is allowed to proceed under ProcLock, ProcSplitLock, and PHold. The "Quiesce" flow requirement will result in blocking of VC1, which can be a result of config register controlled quiesce flow or from the Intel QPI message NcMsgS-Quiesce. This blocking of VC1 for "Quiesce" is necessary when it's necessary to ensure no traffic is flowing on Intel QPI.

The lock arbiter can support a maximum of 8 CPU lock sources and one PHold source, where each source can only have a single lock or hold pending at a time. The queue receives a System Lock or PHold and sends it to the issue/control state-machine. The queue must send the System Lock and PHold requests in FIFO order to the state-machine. The System Lock queue will store only the basic information about the System Lock: SrcNodeID, Tag, and Lock Type (2-bit).

The issue/control state-machine is shown in Figure 4-4. Each System Lock must have a corresponding Unlock after the System Lock completion is sent. After the Unlock completion is sent, the state-machine is ready to accept the next System Lock or PHold request from the System Lock queue. In each of the states with the word "proceeding" a StartReq/StopReq message is broadcast to a set of Intel QPI participants and/or to

internal “south agent” targets within the IOH. Which participants are included is specified in Table 4-12. For details on how the StartReq/StopReq messages are broadcast see Section 4.5.7.1.

The lock arbiter also provides quiescence and de-quiescence of the system for debug and RAS operations via configuration registers. The registers used are referred to as Q[2:0] & DeQ[2:0] in Figure 4-4. Configuration register is defined in Chapter 21. When the Q[2:0] register bits are set quiescence is initiated. There are bits to allow each startreq phase to be initiated individually. The DeQ[2:0] bits allow each StartReq phase to be individually controlled. Before DeQ[2:0] are set the Q[2:0] bit should be cleared to prevent the Quiesce flow from starting up immediately as it enters idle. The same is true for DeQ[2:0] which should be cleared before Q[2:0] should be set. The state of the “lock arbiter” is used by software to identify when each phase is complete. This information is exported to the register defined in Section 21.11.2.21.

Prior to quiesce software must ensure that no System Locks or PHold requests are active. System Locks are avoided by bring the processors into SMM mode. In a platform that supports PHold, firmware must first set the quiesce control bit to block PHold requests at the lock arbiter. Then poll to ensure that the Lock Arbiter is in the “Idle” state before proceed with the flow described above.

During system quiesce, no MSI is expected to be generated internally by IOH. If there is an MSI not blocked at PCIe root ports (by setting MSI ENABLE bit of MSICTRL register to 0) during system quiesce, then the hardware is going to push it out.

Figure 4-4. Lock Arbiter Issue/Control State-Machine

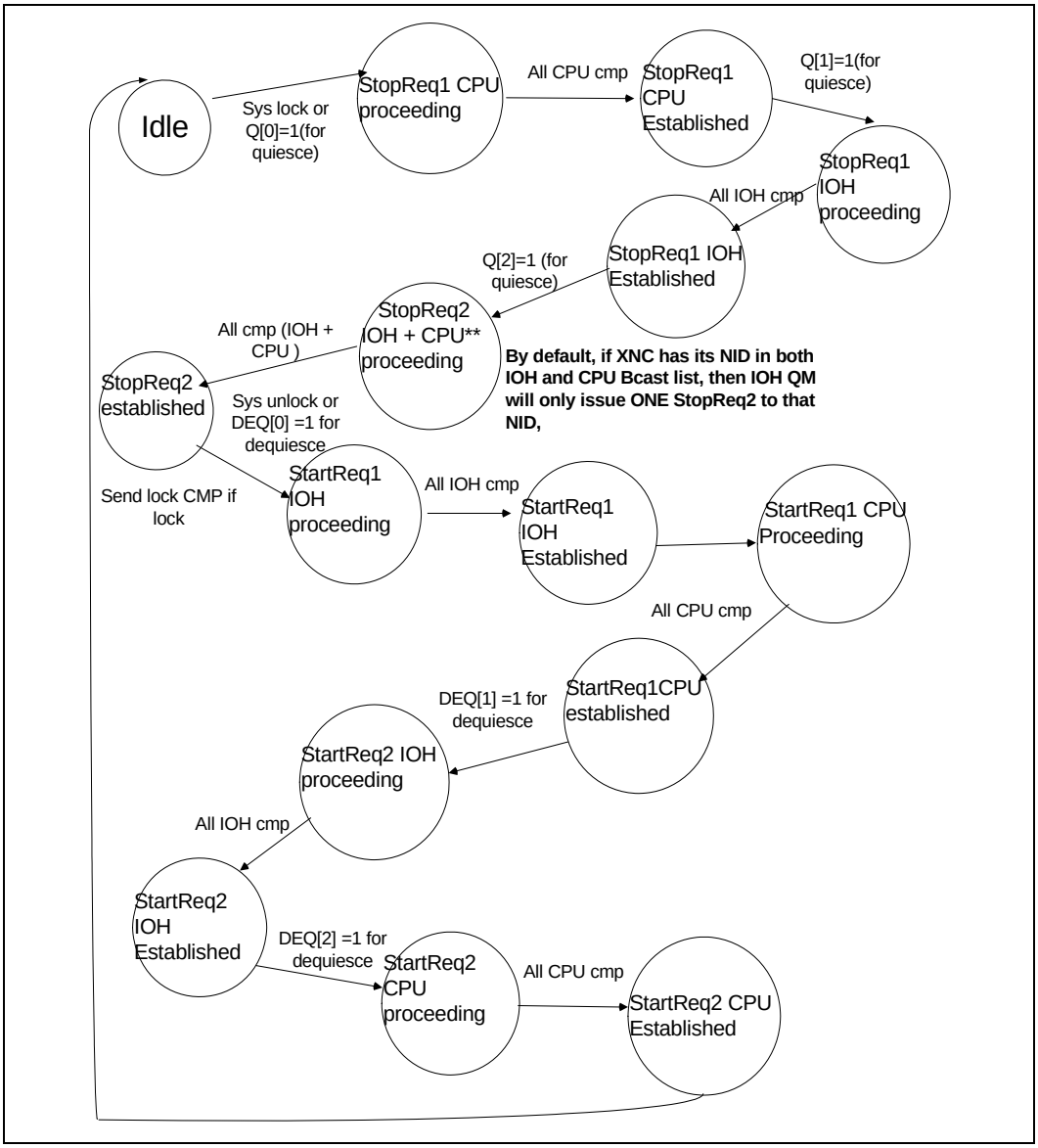

Table 4-12. Lock Master Participant List Usage

Broadcast State	Participant List used	Register Used
StopReq1-CPU Proceeding	CPU Participants	"QPIPQBCPU: QPI Protocol Quiesce Broadcast CPU"
StopReq1-IOH Proceeding, StopReq2 Proceeding	IOH Participants	"QPIPQBIOH: QPI Protocol Quiesce Broadcast IOH"
StartReq1 Proceeding, StartReq2-IOH Proceeding	IOH Participants	"QPIPQBIOH: QPI Protocol Quiesce Broadcast IOH"
StartReq2-CPU Proceeding	CPU Participants	"QPIPQBCPU: QPI Protocol Quiesce Broadcast CPU"

4.7.1 Lock Arbiter Time-Out

Requests generated to the local IOH by the lock arbiter will use the same time-out hierarchy as requests issued on Intel QuickPath Interconnect.

4.8 Write Cache

The IOH write cache is used for pipelining of inbound coherent writes. This is done by obtaining exclusive ownership of the cache line prior to ordering. Then writes are made observable (M-state) in I/O order.

4.8.1 Write Cache Depth

The write cache depth calculation is based on the latency from allocation of the RFO until the EWB causes de-allocation of the entry.

A 128-entry Write Cache meets the bandwidth requirement. This cache size assumes it is only used for inbound writes and any space for inbound read completions or read caching would be independent.

4.8.2 Coherent Write Flow

Inside the IOH, coherent writes follow a flow that starts with a RFO (Request for Ownership) followed by write a promotion to M-state.

IOH will issue an RFO command on the Intel QuickPath Interconnect when it finds the write cache in I-state. The command used for the RFO phase depends on the a configuration mode bit that selects between “Normal” or “Invalidating Write” flow. In the “Standard” flow uses the InvItoE request while the “Invalidating Write” flow uses InvWbMtoI command. These requests returns E-state with no data.

In the case where a RFO hits an M-state line in the write cache, ownership is granted immediately with no request appearing from Intel QPI. This state will be referred to as MG (M-state with RFO Granted). This state is necessary for resolving local conflicts because M-state can exist in the cache without any RFO ownership being granted. For the case of E-state in the write cache requires no additional sub-state because it always has an RFO granted.

An RFO hitting E-state or MG-state in the write cache, indicates that another write has already received RFO completion. Refer to Section 4.10 for details on how this is handled.

The write promotion phase causes an M-state transition in the write cache. For partial writes, the modified bytes are tracked. In the case of MG->M state transition the data must be merged and the modified bytes being tracked are also merged. Local and remote conflict scenarios described in Section 4.5.7.

In both cases IOH will hold the RTID allocation from the time the RFO is sent over Intel QPI until the EWB phase is completed. Holding of the allocation in this manner is a requirement the Invalidating Write flow because the tracker in the home is being used to track E-state in the IOH. The Standard flow will use the same RTID policy to minimize difference between the two modes.

As part of the Invalidating write flow the IOH must evict lines immediately when M-state is reached to prevent starvation in the CPU. IOH applies a single eviction policy for both modes of operation.

4.8.3 Cache State

If RFO is received by the cache and the current state is I, then either an InvItoE or InvWbMtoI occurs on the Intel QuickPath Interconnect (depending on the mode). This request always returns E-state with no data. Before this request can be issued a data resource is pre-allocated in the write cache to ensure forward progress. When the RFO request is completed then E-state has been granted for a write. Once all the I/O ordering requirements have been met, the promotion phase occurs and the state of the line becomes M.

4.8.4 System Directory Support

Under normal operation the IOH will not drop E/M cache state, and will thus have no need for system directory update. In special cases that require dropping of E state, the IOH will issue a WbMtoI + WbDataPtl with 0 byte enables. This allows inclusive snoop filter to remain in sync with the IOH cache.

For inbound reads in RdCode mode, the F/S-state data returned is immediately degraded to I-state. Any inclusive snoop filter must be aware of this policy within IOH.

4.9 Outgoing Request Buffer (ORB)

When a transaction is issued onto the Intel QuickPath Interconnect, an ORB entry is allocated. This list keeps all pertinent information about the transaction header needed to complete the request. It also stores the cacheline address for coherent transactions to allow conflict checking with snoops and other local requests. See Section 4.10 for details. An Intel QuickPath Interconnect response may come as multiple phases. The ORB tracks each completion phase (that is, Data* and Cmp) and any conflicts (that is, snoops, FrcAckCnflt Response) in the ORB.

When a request is issued, a RTID (Requestor Transaction ID) is assigned based on Home NodeID. Limitations are placed on the RTID based on how many transactions each home agent can support. The RTID allocation limitation binds the tag to a specific range; this range is referred to as *MaxRequests*, where the range is 0 to *MaxRequests-1*. This is value is programmable in the IOH configuration registers.

The Home NodeID and RTID are returned in the responses. The ORB must provide a way to associate the response's RTID and Home NodeID with a ORB entry. This can be done through a reverse lookup table based on RTID and Home NodeID or by searching the table for matching RTID and NodeID. Simplification of the reverse lookup function is possible by limiting the scope of the RTID allocation as described in Section 4.9.2.

4.9.1 ORB Depth

The ORB depth is based on the number of requests the IOH needs to be pending on Intel QuickPath Interconnect to achieve full bandwidth, given worst-case average latency for a 4S system. This latency is calculated from allocation and de-allocation of tag. The ORB depth is 256 entries. The IOH will further partition the 256 entries into 128 entries per port. For evenly distributed traffic, this will provide the equivalent of 256 entries.

4.9.2 Requestor Transaction ID (RTID)

RTID allocation is broken into separate pools, 4 pools for each Intel QPI port (8 pools total). The size of pools, which correspond to the MaxRequest variable in Intel QPI, are programmable to 1, 2, 4, 8, 16, 24, 32. This MaxRequest value is configurable per allocation pool. The RTIDs generated from the given pool are between 0 and MaxRequests-1. Attention must be paid that RTID changes are done in one step. Programming MaxRequest RTID in multiple steps may cause a CATERR. Which pool is selected depends on the home NodeID target for the request. Configuration registers set which bits from the NodeID select the pool to use. The index setting should be chosen to maximize use of all allocation pools when traffic is distributed across all home agents. This selection depends on the NodeIDs of the agents connected to that port and the routing table map to get to that port. See Chapter 21 for additional details.

4.9.3 Time-Out Counter

Each entry in the ORB is tagged with a timeout value when it is allocated; the timeout value is dependent on the transaction type. This separation allows for isolation a failing transaction when dependence exists between transactions. Table 4-13 shows the timeout levels of transactions the IOH supports. Levels 2 and 6 are for transactions that the IOH does not send. The levels should be programmed such that they are increasing to allow the isolation of failing requests, and they should be programmed to consistent values across all components in the system.

The ORB implements a 2-bit timeout tag value per entry that starts out being set to 0x0. The timeout counter rate value x is programmable per time-out level. It is controllable through configuration in powers of 2. The timeout counter rate x will result in a time-out for a given transaction in that level between 3x-4x based on the 2-bit timeout tag. The configuration values should be programmed to increase as the level increases to support longer timeout values for the higher levels.

On each global timeout counter expiration, every ORB entry with a matching request for that level is checked. If a match is found on a valid transaction and the timeout tag is equal to 0x2, then it logged as a timeout, else the timeout tag is incremented. If timeout occurs, a failed response status is then sent to the requesting south agent for non-posted requests, and all Intel QuickPath Interconnect structures will be cleared of this request.

A request in the ORB which receives an AbortTO response, results in resetting of the timeout tag for that request. The only usage model for this case corresponds to configuration transactions to PCI Express targets coming out of reset.

Table 4-13. Time-Out Level Classification for IOH

Level	Request Type
1	WbMtoI
2	None
3	NonSnpRd, NonSnpWr, RdCur[3], RdCode, InvItoE, NcP2PB, IntPhysical, IntLogical[2], NcMsgS-StartReq1, NcMsgB-StartReq2, PrefetchHint[2]
4	NcP2PS, NcMsgB-VLW, NcMsgB-PmReq
5[1]	NcMsgS-StopReq1, NcMsgS-StopReq2
6	None

Note:
1. Intel Itanium processor 9300 series will put PTC.g requests at level 5, which put the StopReq* messages at level 6. Because IOH does not support PTC.g this can be represented programming the IOH level 5 timeout adequately larger then the Intel Itanium processor 9300 series level 5.
2. Intel Xeon processor 7500 series-based platform (Boxboro-EX platform) only
3. Intel Itanium processor 9300 series-based platform only

Timeout values are specified for each level independently. The values are specified in core clocks which is proportional to Intel QuickPath Interconnect operational frequency.

4.10 Conflict Handling

A coherent conflict occurs in the Intel QuickPath Interconnect when two requests are trying to access the same cache line. This can occur when a snoop hits a pending outstanding request or ownership grant. This type of conflict is referred to as a Remote-Local Conflict. The other type of conflict is a local-local conflict, where a local read or RFO hits a pending outstanding request on the Intel QuickPath Interconnect, or a write cache entry. Local-Local conflicts also apply to non-coherent requests to DRAM (NonSnpRd & NonSnpWr*).

Intel QuickPath Interconnect also has a number of rules to prevent general network deadlock that apply to all transactions. This section will refer to this class of resource deadlock.

In this section, “local requests” are requests originating from PCI Express, or ESI coming from the Intel QuickPath Interconnect interface, originating from a processor or IOH.

4.10.1 Coherent Local-Local Conflicts

Local-local conflicts occur when a local request finds state for the same cache line in the Write Cache or ORB. There are three possible outcomes of the conflict detection: stall the request until the conflicting transaction completes, eviction of the line from the write cache, or completion of the transaction.

Table 4-14. Local-Local Conflict Actions

Local Request	ORB or Write Cache State	Action
Rd or NonSnpRd or NonSnpWr*	Rd or NonSnpRd or NonSnpWr*	• Stall until completed.
	RFO	• Stall until EWB completed. • Force EWB on Promotion.
	EWB	• Stall until EWB completed.
	E- or MG-state	• Stall until EWB completed. • Force EWB on Promotion.
	M-state	• Stall until EWB completed. • Force EWB.
	Non-Coh VT-d table data	• Data may be snarfed locally for other Intel VT-d Reads.
RFO	Rd or NonSnpRd or NonSnpWr*	• Stall until completed.
	RFO	• Stall until Promotion. • If promotion does not evict the line then Complete RFO. • If promotion causes EWB, then send RFO after EWB completed.
	EWB	• Stall until EWB completed.
	E- or MG-state	• Stall until Promotion. • If promotion does not evict the line then Complete RFO. • If promotion causes EWB, then send RFO after EWB completed.
	M-state	• Complete immediately, no stall condition.
M-Promote	Rd or NonSnpRd or NonSnpWr* or RFO or EQB or M-state	• Impossible. EWB can only be received in E or MG state.
	E- or MG-state	• Normal flow to M-state and Eviction. • If M-state does not cause eviction under normal rules then Conflict queue is checked to see if EWB required or RFO completion required. • EWB: on EWB completion, next conflict is cleared. • If multiple ownerships are granted simultaneously, then state will change to MG state.

4.10.1.1 Local Conflict Bypassing

In the condition where the request is stalled, other requests are allowed to bypass from all clusters. Although conflicts are somewhat rare, a single conflict can not block traffic from other streams. The bypass buffer can absorb one stalled conflicting request per active cache line. Upon receiving a second conflict, all Read and RFO requests are blocked. Write promotion will never conflict which is guaranteed by E/M state. Promotions will not be blocked by conflicted RFO or Read request.

4.10.2 Coherent Remote-Local Conflicts

Because the IOH only supports a sub-set of coherency states and coherent transactions, it requires only a limited subset of full conflict handling.

It is assumed that conflicts occur on less than one percent of total transactions. This implies that performance of these individual transactions are of little importance, however blocking on a single conflict can not be allowed to block forward progress of other "remote requests".

Table 4-15. Remote-Local Conflict Actions

Snoop Request	Local Transaction Phase	Local Transaction Pending	Snoop Response
SnpCode, SnpData, SnpInvItoE, SnpInvXtoI	Request	Rd (RdCode) RFO EWB	RspCnflt
SnpCode, SnpData, SnpInvItoE, SnpInvXtoI	AckCnflt	Rd (RdCode) RFO EWB	<Buffer/Block>

The AckCnflt phase is completed by a Cmp or Cmp_Fwd*. Table 4-16 shows the responses and final state in the IOH on receiving different Cmp_Fwd* completions. Once the AckCnflt phase is completed, all buffered snoops are cleared.

Table 4-16. Conflict Completions Actions

Local Transaction Pending	Conflict Completion	Response to Requestor	Send to Home	Final State	Notes
Rd (RdCur)	Cmp_Fwd*	N/A	RspI	I	RdCur results in I-state
Rd (RdCode)	Cmp_Fwd*	N/A	RspI	I	RdCode in IOH will always degrade to I state on RdCode Completion.
RFO (Write not at the head of IOQ)	Cmp_Fwd*	N/A	RspI	I	E-state will always degrade to I-state because data may not exist on E-state.
RFO (Write at the head of *IOQ* ready to atomically go M)	Cmp_FwdCode Cmp_FwdInvItoE Cmp_FwdInvOwn	N/A	RspIWb + WbIData	I	Write back to home
	Cmp_FwdInvOwn	DataC_M	RspFwdI	I	
EWB	Cmp_Fwd*	N/A	RspI	N/A	The Cmp_Fwd* message could be avoided by the home agent in this case, but some home agents may not use this optimization.

4.10.3 Resource Conflicts

Resource conflicts are generally not a problem in the Intel QuickPath Interconnect because of the independent nature of the message classes. Two cases are explicitly stated here for how resources are managed to prevent resource problems.

The first basic Intel QuickPath Interconnect rule is that completions are absorbed at the source, unconditional on any other message classes. This generally requires pre-allocation of completion resources before a request is sent. See Section 4.11.1 for more details on message class ordering details.

The ORB ensures that peer-to-peer non-posted requests do not fill the ORB (per allocation pool). This ensures that posted requests (with respect to PCI Express) will never be blocked by non-posted peer-to-peer requests.

The ORB ensures that Reads are allowed fair access into the ORB.

4.11 Deadlock Avoidance

Following section calls out specific IOH ordering requirements.

4.11.1 Protocol Channel Dependence

Section 4.11.1.1 through Section 4.11.1.3 concentrate on potential deadlock situations between outbound and inbound traffic, and vice versa.

4.11.1.1 Outbound NC Request versus Inbound NC Request

Completions are always allowed to bypass deferred requests in the PCI ordered domain.

4.11.1.2 Inbound Response versus Inbound AckCnflt (Home Channel)

Inbound responses (responses received by the IOH) are never blocked because of blocking on the home channel in the inbound direction.

4.11.1.3 Snoop Stall on Hit, E-State

Any snoop that hits a line being promoted to M-state will be stalled while the promotion request for the M-state data is received from the IOQ to the write cache.

The write cache will revoke ownership if a snoop hits a blocked write in E-state and the RFO will be re-issued. See Section 4.10.2 for more details.

§

5 PCI Express* and ESI Interfaces

5.1 Introduction

PCI Express* is the next generation I/O interface extending I/O solutions beyond PCI-X. It offers a very high bandwidth to pin interface for general-purpose adapters interfacing a wide variety of I/O devices. The *PCI Express Base Specification,* Revision 2.0 provides the details of the PCI Express protocol. This chapter is complementary to Chapter 3 and should be used as additional reference.

5.2 PCI Express* Link Characteristics - Link Training, Bifurcation, Downgrading and Lane Reversal Support

5.2.1 Link Training

The IOH PCI Express port 0 and port 1 will support the following Link widths: x16, x8, x4, x2 and x1. The IOH PCI Express port 2 will support link widths x4, x2 and x1. During link training, the IOH will attempt link negotiation starting from the highest and ramp down to the nearest supported link width that passes negotiation. Each of the widths (x16, x8, x4, x2, x1) are trained in both the non-lane-reversed and lane-reversed modes. For example, x16 link width is trained in both the non-lane-reversed and lane-reversed modes before attempting a dual x8 configuration.

5.2.2 Port Bifurcation

IOH supports port bifurcation via two different means:

- Using the hardware straps. Table 19-12 illustrates the strapping options for ports 0, 1, and 2.
- Via BIOS by appropriately programming the PCIE_PRTx_BIF_CTRL register

5.2.2.1 Port Bifurcation via BIOS

When BIOS needs to control port bifurcation, the hardware strap needs to be set to “Wait_on_BIOS”. This instructs the LTSSM to not train till BIOS explicitly enables port bifurcation by programming the PCIE_PRTx_BIF_CTRL register. The default of the latter register is such as to halt the LTSSM from training at poweron, provided the strap is set to “Wait_on_BIOS”. When BIOS programs the appropriate bifurcation information into the register, it can initiate port bifurcation by writing to the “Start bifurcation” bit in the register. Once BIOS has started the port bifurcation, it cannot initiate any more *bifurcation* commands without resetting the IOH. Note that software can initiate link retraining within a sub-port or even change the width of a sub-port (by programming the PCIE_PRTx/ESI_LANE_MSK register) any number of times without resetting the IOH. Please refer to Section 21.12.5.22-Section 21.12.6.

Here is a pseudo-code example for how the register and strap work together to control port bifurcation. Note that “strap to ltssm” indicates the IOH internal strap to the LTSSM.

```
If (PCIE_PRT<0,1>_BIF_CTRL[2:0]/PCIE_PRT2_BIF_CTRL[1:0] == 111/11) {
        If (<PE0/1CFGSEL[2:0]>, <PE2CFGSEL[1:0]>!= <111>,<11>) {
                Strap to ltssm = strap
        } else {
                Wait for "PCIE_PRTx_BIF_CTRL[3]" bit to be set
                Strap to ltssm = csr
        }
} else {
        Strap to ltssm = csr
}
```

Note that the bifurcation control registers are sticky and BIOS can chose to program the register and cause an IOH reset and the appropriate bifurcation will take effect on exit from that reset.

5.2.3 Degraded Mode

Degraded mode is supported for x16, x8, x4 and x2 link widths. IOH supports degraded mode operation at half the original width and quarter of the original width or a x1. This mode allows one half or one quarter of the link to be mapped out if one or more lanes should fail during normal operation. This allows for continued system operation in the event of a lane failure. Without support for degraded mode, a failure on a critical lane like lane 0 could bring the entire link down in a fatal manner. This can be avoided with support for degraded mode operation. For example, if lane 0 fails on a x8 link, then the lower half of the link will be disabled and the traffic will continue at half the performance on lanes 4-7. Similarly, a x4 link would degrade to a x2 link. This remapping should occur in the physical layer and the link and transaction layers are transparent to the link width change. The degraded mode widths are automatically attempted every time the PCI Express link is trained. The events that trigger the PCI Express link training are per the *PCI Express Base Specification,* Revision 2.0. For example, if a packet is retried on the link N times (where N is per the *PCI Express Base Specification,* Revision 2.0) then a physical layer retraining is automatically initiated. When this retraining happens, IOH starts out with negotiating a link width that it is currently operating at and if that fails, starts out with negotiating a lower link width per the degraded mode operation.

IOH supported degraded modes are shown below. The Table 5-1 should be read such that the various modes indicated in the different rows would be tried by IOH, but not necessarily in the order shown in the table. IOH would try a higher width degraded mode before trying any lower width degraded modes.

Table 5-1. Supported Degraded Modes

Original Link Width[1]	Degraded Mode Link width and Lanes Numbers
x16	x8 on lanes 7-0, 0-7, 15-8, 8-15
	x4 on lanes 3-0, 0-3, 4-7, 7-4, 8-11, 11-8, 12-15, 15-12
	x2 on lanes 1-0, 0-1, 4-5, 5-4, 8-9, 9-8, 12-13, 13-12
	x1 on lanes 0, 1, 2, 3, 4, 5, 6, 7, 8, 9, 10, 11, 12, 13, 14, 15
x8	x4 on lanes 7-4, 4-7, 3-0, 0-3
	x2 on lanes 5-4, 4-5, 1-0, 0-1
	x1 on lanes 0, 1, 2, 3, 4, 5, 6, 7
x4	x2 on lanes 1-0, 0-1
	x1 on lanes 0, 1, 2, 3
x2	x1 on lanes 0, 1

Notes:

1. This is the native width of the link before degraded mode operation

IOH reports entry into or exit from degraded mode to software (see Section 21.12.5.19) and also records which lane failed.

5.2.4 Lane Reversal

IOH supports lane reversal on all its PCI Express ports, regardless of the link width that is, lane reversal works in x16, x8, x4 and x2 link widths. Note that IOH supports logic that allows a x4, x8 or x16 card to be plugged into a x16 slot that is lane-reversed on the motherboard, and operate at the max width of the card. Similarly for a x4, x8 card plugged into a x8 lane-reversed slot, x4 card plugged into a lane-reversed x4 slot and a x2 card plugged into a lane-reversed x2 slot. Note that for the purpose of this discussion, a “xN slot” means a CEM/SIOM slot that is capable of any width higher than or equal to xN but is electrically wired on the board for only a xN width. A x2 card can be plugged into a x16, x8 or x4 slot and work as x2 only if lane-reversal is not done on the motherboard otherwise it would operate in x1 mode.

5.2.5 PCI Express* Gen1/Gen2 Speed Selection

In general, the IOH will negotiate PCI Express Gen1 versus Gen2 link speed inband during link training.

5.2.6 Form-Factor Support

The IOH supports Cardedge and Server I/O Module (SIOM) form-factors. Form-factor specific differences that exist for hot-plug and power management are captured in their individual sections.

5.3 IOH Performance Policies

5.3.1 Max_Payload_size

IOH will support a Max_Payload_Size of 256B.

5.3.2 Isochronous Support and Virtual Channels

IOH supports the default virtual channel (virtual channel 0) and any TC on the PCI Express interfaces.

5.3.3 Non-Coherent Transaction Support

5.3.3.1 Inbound

Non-coherent transactions are identified by the NoSnoop attribute in the PCI Express request header being set. PCI Express ports in IOH must provide support for converting these transactions to Non-coherent read/writes on Intel QuickPath Interconnect. For writes the NoSnoop attribute is used in conjunction with the Relaxed Ordering attribute to reduce snoops on Intel QuickPath Interconnect interface. For inbound reads with NoSnoop attribute set, IOH does not snoop on Intel QuickPath Interconnect. This optimization for reads and writes can be individually disabled.

5.3.3.2 Outbound

IOH always clears the NoSnoop attribute bit in the PCI Express header for transactions that it forwards from the CPU. For peer 2 peer transactions from other PCI Express ports and ESI, the NoSnoop attribute is passed as is from the originating port.

5.3.4 Completion Policy

The *PCI Express Base Specification, Revision 1.1 and post 1.1 Erratas and EC*'s* requires that completions for a specific request must occur in linearly-increasing address order. However, completions for different requests are allowed to complete in any order. As long as the above rules are followed, the IOH will send the completions on the PCI Express interface in the order received from the Intel QuickPath Interconnect interface and never artificially delay completions received from Intel QuickPath Interconnect to PCI Express.

5.3.4.1 Read Completion Combining

The *PCI Express Base Specification, Revision 1.1 and post 1.1 Erratas and EC*'s* allows that a single request can be satisfied with multiple “sub-completions” as long as they return in linearly-increasing address order. Therefore, since the IOH must split requests into cacheline quantities before issue on Intel QuickPath Interconnect, the IOH will often complete a large request in cacheline-sized sub-completions.

As a performance optimization, the IOH implements an opportunistic read completion combining algorithm for all reads towards main memory. When the downstream PCI Express interface is busy (e.g. with another transaction) and multiple cachelines have returned before completion on PCI Express is possible, the PCI Express interface will combine the cacheline sub-completions into larger quantities up to MAX_PAYLOAD.

5.3.5 Read Prefetching Policies

The IOH will not perform any prefetching on behalf of interfacing PCI Express component reads. The PCI Express component is solely responsible for its own prefetch algorithms since those components are best suited to make appropriate trade-offs.

The IOH will not perform any outbound read prefetching.

5.3.6 Error Reporting

PCI Express reports many error conditions through explicit error messages: ERR_COR, ERR_NONFATAL, ERR_FATAL. The IOH can be programmed to do one of the following when it receives one of these error messages:

- Generate MSI
- Assert pins ERR[2:0]
- Forward the messages to the ICH

Refer to the *PCI Express Base Specification,* Revision 2.0 for details of the standard status bits that are set when a root complex receives one of these messages.

5.3.7 Intel Chipset-Specific Vendor-Defined Messages

Intel chipset-specific vendor-defined messages (VDMs) are identified with a Vendor ID of 8086 in the message header and a specific message code. Refer to Enterprise Southbridge Interface Specification for more details.

5.3.7.1 ASSERT_GPE / DEASSERT_GPE

Upon receipt of an Assert_GPE message from a PCI Express port, the IOH forwards the message to the ICH. When the GPE event has been serviced, the IOH will receive a Deassert_GPE message on the PCI Express port. At this point the IOH can send the deassert_GPE message on ESI.

When an IOH does not have its ESI port enabled for legacy, it forwards the messages over the Intel QuickPath Interconnect.

5.4 Inbound Transactions

This section discusses the IOH behavior towards transactions that originate from PCI Express. Throughout this section, inbound refers to the direction towards main memory from I/O.

5.4.1 Inbound Memory, I/O and Configuration Transactions Supported

Table 5-2 lists the memory, I/O and configuration transactions supported by the IOH which are expected to be received from the PCI Express.

Table 5-2. Incoming PCI Express Memory, I/O and Configuration Request/Completion Cycles (Sheet 1 of 2)

PCI Express* Transaction	Address Space or Message	IOH Response
Inbound Write Requests	Memory	Forward to Main Memory, PCI Express port (local or remote) or ESI (local or remote) depending on address.
	I/O	Forward to PCI Express port (local or remote) or ESI (local or remote).
	Type 0 Configuration	Forward to the peer-to-peer port whose device number matches the device number in the Type 0 transaction, if enabled.
	Type 1 Configuration	Forward to peer PCI Express port (local or remote) or ESI (local or remote).

Table 5-2. Incoming PCI Express Memory, I/O and Configuration Request/Completion Cycles (Sheet 2 of 2)

PCI Express* Transaction	Address Space or Message	IOH Response
Outbound Write Completions	I/O	Forward to processor, PCI Express port (local or remote) or ESI (local or remote). Refer to Section 5.4.2 for handling of Configuration retry completions that target the processor.
	Configuration	
Inbound Read Requests	Memory	Forward to Main Memory, PCI Express port (local or remote), ESI (local or remote).
	I/O	Forward to peer PCI Express port (local or remote), ESI (local or remote).
	Type 0 Configuration	Forward to the peer-to-peer port whose device number matches the device number in the Type 0 transaction, if enabled.
	Type 1 Configuration	Forward to peer PCI Express port (local or remote) or ESI (local or remote).
Outbound Read Completions	Memory	Forward to CPU, PCI Express port (local or remote) or ESI (local or remote). Refer to Section 5.4.2 for handling of Configuration retry completions that target the processor.
	I/O	
	Configuration	

5.4.2 Configuration Retry Completions

When a PCI Express port receives a configuration completion packet with a configuration retry status, it reissues the transaction on the affected PCI Express port or completes it. There is an ECN to 1.0a spec that allows for Configuration retry from PCI Express to be visible to software by returning a value of 0x01 on configuration retry (CRS status) on configuration reads to the VendorID register. This ECN provides details of when a root port reissues a configuration transaction and when it is required to complete the transaction.

Here is the summary of when IOH decides to reissue a configuration request.

- When configuration retry software visibility is disabled via the root control register:
  - A configuration request (read or write and regardless of address) is reissued when a CRS response is received for the request and the Configuration Retry Timeout timer has not expired. If the timer has expired, a CRS response received after that will be aborted and a UR response is sent.
  - An “Timeout Abort” response is sent on the Intel® QuickPath Interconnect at the expiry of every 48 ms from the time the request has been first sent on PCI Express until the request has been retired.
- When configuration retry software visibility is enabled via the root control register:
  - The reissue rules as stated previously apply to all configuration transactions, except for configuration reads to vendor ID field at DWORD offset 0x0. When a CRS response is received on a configuration read to VendorID field at word address 0x0, IOH completes the transaction normally with a value of 0x01 in the data field and all 1s in any other bytes included in the read. Refer to *PCI Express Base Specification, Revision 1.1 and post 1.1 Erratas and EC*'s* for more details.

Note: An IOH-aborted configuration transaction is treated as if the transaction returned a UR status on PCI Express, except that the associated PCI header space status and the AER status/log registers are not set.

5.4.3 Inbound PCI Express Messages Supported

Table 5-3 lists all inbound messages that IOH supports receiving on a PCI Express downstream port (does not include ESI messages). In a given system configuration, certain messages are not applicable being received inbound on a PCI Express port. They will be called out as appropriate.

Table 5-3. Incoming PCI Express* Message Cycles

PCI Express Transaction	Address Space or Message	IOH Response
Inbound Message	ASSERT_INTA DEASSERT_INTA ASSERT_INTB DEASSERT_INTB ASSERT_INTC DEASSERT_INTC ASSERT_INTD DEASSERT_INTD	Inband interrupt assertion/deassertion emulating PCI interrupts. Forward to ESI.
	ERR_COR ERR_NONFATAL ERR_FATAL	PCI Express error messages propagate as an interrupt to system or cause the ERR[2:0] pins to toggle.
	PM_PME	Propagate as an interrupt/general purpose event to the system.
	PME_TO_ACK	Received PME_TO_ACK bit is set when IOH receives this message.
	PM_ENTER_L1 (DLLP)	Block subsequent TLP issue and wait for all pending TLPs to Ack. Then, send PM_REQUEST_ACK. Refer to *PCI Express Architecture Specification*, Revision 1.0a for details of the L1 entry flow.
	ATC Invalidation Complete	When an end point device completes an ATC invalidation, it will send an Invalidate Complete message to the IOH (RC). This message will be tagged with information from the Invalidate message so that the IOH can associate the Invalidate Complete with the Invalidate Request.
Vendor-defined	ASSERT_GPE DEASSERT_GPE (Intel-specific)	Vendor-specific message indicating assertion/ deassertion of PCI-X* hot-plug event in PXH. Message forwarded to ESI port. Refer to Section 5.3.7.1, "ASSERT_GPE / DEASSERT_GPE" for further details.
	All Other Messages	Silently discard if message type is type 1 and drop and log error if message type is type 0

5.5 Outbound Transactions

This section describes the IOH behavior towards outbound transactions. Throughout the rest of the chapter, outbound refers to the direction from processor towards I/O.

5.5.1 Memory, I/O and Configuration Transactions Supported

The IOH generates the outbound memory, I/O and configuration transactions listed in Table 5-4.

Table 5-4. Outgoing PCI Express* Memory, I/O and Configuration Request/Completion Cycles

PCI Express* Transaction	Address Space or Message	Reason for Issue
Outbound Write Requests	Memory	Memory-mapped I/O write targeting a PCI Express device.
	I/O	Legacy I/O write targeting a PCI Express device.
	Configuration	Configuration write targeting a PCI Express device.
Inbound Write Completions	I/O	Response for an inbound write to a peer I/O device.
	Configuration	Response for an inbound write to a peer I/O device or to the originating port.
Outbound Read Requests	Memory	Memory-mapped I/O read targeting a PCI Express device.
	I/O	Legacy I/O read targeting a PCI Express device.
	Configuration	Configuration read targeting PCI Express device.
Inbound Read Completions	Memory	Response for an inbound read to main memory or a peer I/O device.
	I/O	Response for an inbound read to a peer I/O device.
	Configuration	Response for an inbound read to a peer I/O device or to the originating port.

5.5.2 Lock Support

For legacy PCI functionality, the IOH supports bus locks through an explicit sequence of events. The IOH can receive a locked transaction sequence on the Intel QuickPath Interconnect interface directed to a PCI Express port.

5.5.3 Outbound Messages Supported

Table 5-5 provides a list of all the messages supported by the IOH as an initiator on a PCI Express port.

Table 5-5. Outgoing PCI Express Message Cycles

PCI Express* Transaction	Address Space or Message	Reason for Issue
Outbound Messages	Unlock	Releases a locked read or write transaction previously issued on PCI Express.
	PME_Turn_Off	When PME_TO bit in the MISCCTRLSTS register is set, send this message to the associated PCI Express port.
	PM_REQUEST_ACK (DLLP)	Acknowledges that the IOH received a PM_ENTER_L1 message. This message is continuously issued until the receiver link is idle. Refer to the *PCI Express Base Specification*, Revision 2.0 for details.
	PM_Active_State_Nak	When the IOH receives a PM_Active_State_Request_L1.
	Set_Slot_Power_Limit	Message that is sent to a PCI Express device when software writes to the Slot Capabilities Register or the PCI Express link transitions to DL_Up state. Refer to *PCI Express Base Specification*, Revision 2.0 for more details.
Intel Chipset-specifc Vendor-defined	EOI	End-of-interrupt cycle received on the Intel QuickPath Interconnect. The IOH broadcasts this message to all downstream PCI Express and ESI ports.

5.5.3.1 Unlock

This message is transmitted by the IOH at the end of a lock sequence. This message is transmitted regardless of whether PCI Express lock was established or whether the lock sequence terminated in an error.

5.5.3.2 EOI

EOI messages will be multicast from the Intel QuickPath Interconnect to all the PCI Express interfaces/ESI ports that have an APIC below them. Presence of an APIC is indicated by the EOI enable bit (refer to Chapter 21). This ensures that the appropriate interrupt controller receives the end-of-interrupt.

5.6 32-/64-Bit Addressing

For inbound and outbound memory reads and writes, the IOH supports the 64-bit address format. If an outbound transaction's address is less than 4 GB, the IOH will issue the transaction with a 32-bit addressing format on PCI Express. Only when the address is greater than 4 GB will the IOH initiate transactions with 64-bit addressing format. Refer to Chapter 7 for details of addressing limits imposed by the Intel® QuickPath Interconnect and the resultant address checks that IOH does on PCI Express packets it receives.

5.7 Transaction Descriptor

The *PCI Express Base Specification,* Revision 2.0 defines a field in the header called the Transaction Descriptor. This descriptor comprises three sub-fields:

- Transaction ID
- Attributes
- Traffic class

5.7.1 Transaction ID

The Transaction ID uniquely identifies every transaction in the system. The Transaction ID comprises four sub-fields described in Table 5-6. The table provides details on how this field in the PCI Express header is populated by the IOH:

Table 5-6. PCI Express Transaction ID Handling

Field	Definition	IOH as Requester	IOH as Completer
Bus Number	Specifies the bus number that the requester resides on.	The IOH fills this field in with zeros.	The IOH preserves this field from the request and copies it into the completion.
Device Number	Specifies the device number of the requester.	For CPU requests, the IOH fills this field in with its Device Number that the PCI Express cluster owns.	
Function Number	Specifies the function number of the requester.	The IOH fills this field in with its Function Number that the PCI Express cluster owns (zero).	
Tag	Denotes a unique identifier for every transaction that requires a completion. Since the PCI Express ordering rules allow read requests to pass other read requests, this field is used to reorder separate completions if they return from the target out-of-order.	Non-Posted (NP) Transaction: The IOH fills this field in with a value such that every pending request carries a unique Tag. NP Tag[7:5]=Intel QuickPath Interconnect Source NodeID[4:2]. Note that bits 7:5 can be non-zero only when 8-bit tag usage is enabled. Otherwise, the IOH always zeros out 7:5. NP Tag[4:0]=the IOH guarantees uniqueness across all pending NP requests from the port. Posted Transaction: No uniqueness is guaranteed. Tag[7:0]=Intel QuickPath Interconnect Source NodeID[7:0] for processor requests. Note that bits 7:5 can be non-zero only when 8-bit tag usage is enabled. Otherwise, the IOH always zeros out bits 7:5.	

Note: Follow the TransactionID rules outlined in the table above for compliance to features like Intel VT-d and DCA.

5.7.2 Attributes

PCI Express supports two attribute hints described in Table 5-7. This table describes how the IOH populates these attribute fields for requests and completions it generates.

Table 5-7. PCI Express Attribute Handling

Attribute[1]	Definition	IOH as Requester	IOH as Completer
Relaxed Ordering	Allows the system to relax some of the standard PCI ordering rules.	This bit is not applicable and set to zero.	The IOH preserves this field from the request and copies it into the completion.
Snoop Not Required	This attribute is set when an I/O device controls coherency through software mechanisms. This attribute is an optimization designed to preserve processor snoop bandwidth.		

Notes:

1. Refer to the Chapter 3 for how the IOH uses these attributes for performance optimizations.

5.7.3 Traffic Class

The IOH does not optimize based on traffic class. IOH can receive a packet with TC equal not to 0 and treat the packet as if it were TC equal to 0 from an ordering perspective. IOH forwards the TC field as-is on peer-to-peer requests and also returns the TC field from the original request on the completion packet sent back to the device.

5.8 Completer ID

The CompleterID field is used in PCI Express completion packets to identify the completer of the transaction. The CompleterID comprises three sub-fields described in Table 5-8.

Table 5-8. PCI Express CompleterID Handling

Field	Definition	IOH as Completer
Bus Number	Specifies the bus number that the completer resides on.	The IOH returns 00h as the Bus number
Device Number	Specifies the device number of the completer.	The IOH returns 00000b as the Device Number
Function Number	Specifies the function number of the completer.	0

5.9 Miscellaneous Information

5.9.1 Number of Outbound Non-Posted Requests

Each x4 PCI Express link supports up to two outstanding non-posted outbound transactions issued by the processors. Each x8 link supports up to four and x16 supports up to eight outstanding non-posted transactions.

5.9.2 MSIs Generated from Root Ports and Locks

Once lock has been established on the Intel QuickPath Interconnect, the IOH cannot send any requests on the Intel QuickPath Interconnect, including MSI transactions generated from the root port of the PCI Express port that is locked.

5.9.3 Completions for Locked Read Requests

Both LkRdCmp and RdCmp completion types can terminate a locked or non-locked read request.

5.10 PCI Express RAS

The IOH supports the PCI Express Advanced Error Reporting (AER) capability. Refer to *PCI Express Base Specification,* Revision 2.0 for details.

5.10.1 ECRC Support

The IOH does not support the PCI Express end-to-end CRC (ECRC) feature. The IOH ignores and drops ECRC on all incoming packets and does not generate ECRC on any outgoing packet.

5.10.2 Completion Time-Out

For all non-posted requests that the IOH issues on PCI Express or ESI, IOH maintains a timer that times the max completion time for that request.

IOH follows the time-out mechanism ECN that is currently being proposed in the PCI Express Base Specification. The ECN provides a way for the OS to select a coarse range for the timeout value. The IOH then chooses a final value of the timeout within each coarse range. The timeout value is programmable from 50 ms all the way up to 64 seconds. Refer to Chapter 21 for details and additional control that the IOH provides for the 17 second to 64 second timeout range.

Refer to the Chapter 16 for details of responses returned by the IOH to various interfaces on a completion time-out event. AER-required error logging and escalation happen as well. In addition to the AER error logging, the IOH also sets the locked read time-out bit in the Miscellaneous Control and Status Register if the completion time-out happened on a locked read request. See the Chapter 21 for details.

5.10.3 Data Poisoning

The IOH supports forwarding of poisoned data among its interfaces.

The IOH provides an optional mode where poisoned data is never sent out on PCI Express; any packet with poisoned data is dropped by the IOH and generate an error. See the Chapter 16 for details

5.10.4 Role-Based Error Reporting

The IOH supports the new role-based error reporting feature being amended to the PCI Express base specification 1.1. Details of how the IOH handles various error cases under this role-based error reporting scheme are as follows.

A Poisoned TLP received on peer-to-peer packets is treated as an *advisory* non-fatal error condition. that is, ERR_COR is signaled and the poisoned information propagated peer-to-peer.

Poisoned TLP on packets destined for internal devices of the IOH are treated, from a PCI Express interface error reporting perspective, as a *normal,* non-fatal error condition.

Poisoned TLP on packets destined towards DRAM, or poisoned TLP packets that target the interrupt address range, are forwarded to the Intel QuickPath Interconnect with the poison bit set, provided the Intel QuickPath Interconnect interface is enabled to set the poisoned bit via QPIPC[12]. In such a case the received poisoned TLP condition is treated as *advisory* non-fatal error on the PCI Express interface. If that bit is not set, the IOH treats the received poisoned TLP condition as a *normal,* non-fatal error. The packet is dropped if it is a posted transaction. A “master abort” response is sent on the Intel® QuickPath Interconnect if the poisoned TLP received was for an outstanding non-posted request.

When the IOH times out, or receives a UR/CA response on a request outstanding on PCI Express, it does not attempt recovery in hardware. Also, it would treat the completion time-out condition as a *normal,* non-fatal error condition. UR/CA received does not cause an error escalation.

5.11 Link Layer Specifics

5.11.1 Ack/Nak

The Data Link layer is responsible for ensuring that TLPs are successfully transmitted between PCI Express agents. PCI Express implements an Ack/Nak protocol to accomplish this. Every TLP is decoded by the Physical layer (8b/10b) and forwarded to the Link layer. The CRC code appended to the TLP is then checked. If this comparison fails, the TLP is retried. Refer to Section 5.11.2 for details.

If the comparison is successful, an Ack is issued back to the transmitter and the packet is forwarded for decoding by the receiver’s Transaction layer. The PCI Express protocol allows that Acks can be combined and the IOH implements this as an efficiency optimization.

Generally, Naks are sent as soon as possible. Acks, however, will be returned based on a timer policy such that when the timer expires, all unacknowledged TLPs to that point are Acked with a single Ack DLLP. The timer is programmable.

5.11.2 Link Level Retry

The *PCI Express Base Specification,* Revision 2.0 lists all the conditions where a TLP gets Nak'd. One example is on a CRC error. The Link layer in the receiver is responsible for calculating 32 bit CRC (using the polynomial defined in *PCI Express Base Specification,* Revision 2.0) for incoming TLPs and comparing the calculated CRC with the received CRC. If they do not match, then the TLP is retried by Nak'ing the packet with a Nak DLLP specifying the sequence number of the corrupt TLP. Subsequent TLPs are dropped until the reattempted packet is observed again.

When the transmitter receives the Nak, it is responsible for retransmitting the TLP specified with the Sequence number in the DLLP + 1. Furthermore, any TLPs sent after the corrupt packet will also be resent since the receiver has dropped any TLPs after the corrupt packet.

5.11.2.1 Retry Buffer

The IOH transmitter retry buffer is designed such that under normal conditions there is no performance degradation. Unless there is a CRC error at the receiver, the transmitter will never back up (at Gen2 speeds) due to insufficient room in the retry buffer. The following environment is assumed:

- 3 m of cable + 25" FR4 total
- Two repeaters
- Four connectors

5.11.3 Ack Time-Out

Packets can get "lost" if the packet is corrupted such that the receiver's Physical layer does not detect the framing symbols properly. Frequently, lost TLPs are detectable with non-linearly incrementing sequence numbers. A time-out mechanism exists to detect (and bound) cases where the *last* TLP packet sent (over a long period of time) was corrupted. A replay timer bounds the time a retry buffer entry waits for an Ack or Nak. Refer to the *PCI Express Base Specification,* Revision 2.0 for details on this mechanism.

5.11.4 Flow Control

The PCI Express flow control types are described in following tables.

Table 5-9. PCI Express Credit Mapping for Inbound Transactions (Sheet 1 of 2)

Flow Control Type	Definition	Initial IOH Advertisement
Inbound Posted Request Header Credits (IPRH)	Tracks the number of posted requests the agent is capable of supporting. Each credit accounts for one posted request.	24(x4) 48(x8) 96(X16)
Inbound Posted Request Data Credits (IPRD)	Tracks the number of posted data the agent is capable of supporting. Each credit accounts for up to 16 bytes of data.	108(x4) 216(x8) 432(X16)
Inbound Non-Posted Request Header Credits (INPRH)	Tracks the number of non-posted requests the agent is capable of supporting. Each credit accounts for one non-posted request.	24(x4) 48(x8) 96(X16)

Table 5-9. PCI Express Credit Mapping for Inbound Transactions (Sheet 2 of 2)

Flow Control Type	Definition	Initial IOH Advertisement
Inbound Non-Posted Request Data Credits (INPRD)	Tracks the number of non-posted data the agent is capable of supporting. Each credit accounts for up to 16 bytes of data.	4(x4) 8(x8) 16(X16)
Completion Header Credits (CPH)	Tracks the number of completion headers the agent is capable of supporting.	infinite
Completion Data Credits (CPD)	Tracks the number of completion data the agent is capable of supporting. Each credit accounts for up to 16 bytes of data.	infinite

Every PCI Express device tracks the above six credit types for both itself and the interfacing device. The rules governing flow control are described in *PCI Express Base Specification,* Revision 2.0.

Note: The credit advertisement in Table 5-9 does not necessarily imply the number of *outstanding* requests to memory.

The IOH keeps a pool of credits that are allocated between the ports based on their partitioning. For example, assume the NPRH credit pool is N for the x8 port. If this port is partitioned as two x4 ports, the credits advertised are N/2 per port.

Table 5-10. PCI Express Credit Mapping for Outbound Transactions

Flow Control Type	Definition	Initial IOH Advertisement
Outbound Posted Request Header Credits (OPRH)	Tracks the number of posted requests the agent is capable of supporting. Each credit accounts for one posted request.	4(x4) 8(x8) 16(X16)
Outbound Posted Request Data Credits (OPRD)	Tracks the number of posted data the agent is capable of supporting. Each credit accounts for up to 16 bytes of data.	8(x4) 16(x8) 32(X16)
Outbound Non-Posted Request Header Credits (ONPRH)	Tracks the number of non-posted requests the agent is capable of supporting. Each credit accounts for one non-posted request.	14(x4) 24(x8) 56(X16)
Onbound Non-Posted Request Data Credits (ONPRD)	Tracks the number of non-posted data the agent is capable of supporting. Each credit accounts for up to 16 bytes of data.	12(x4) 24(x8) 48(X16)
Completion Header Credits (CPH)	Tracks the number of completion headers the agent is capable of supporting.	6(x4) 12(x8) 24(X16)
Completion Data Credits (CPD)	Tracks the number of completion data the agent is capable of supporting. Each credit accounts for up to 16 bytes of data.	12(x4) 24(x8) 48(X16)

5.11.4.1 Flow Control Credit Return by IOH

After reset, credit information is initialized with the values indicated in Table 5-9 by following the flow control initialization protocol defined in the *PCI Express Base Specification,* Revision 2.0. Since the IOH supports only VC0, only this channel is initialized. As a receiver, the IOH is responsible for updating the transmitter with flow control credits as the packets are accepted by the Transaction Layer. Credits will be returned as follows:

- If infinite credits advertised, there are no flow control updates for that credit class, as per the *PCI Express Base Specification,* Revision 2.0

- For non-infinite credits advertised, the IOH will send flow control updates if none were sent previously, for example, after 28 usec (to comply with the specification's 30 usec requirement). This 28 us is programmable down to 6 us.
- If, and only when, there are credits to be released, the IOH will wait for a configurable/programmable number of cycles (in the order of 30-70 cycles) before the flow control update is sent. This is done on a per flow-control credit basis. This mechanism ensures that credits updates are not sent when there is no credit to be released.

5.11.4.2 Flow Control Update DLLP Time-Out

IOH supports the optional flow control update DLLP time-out timer.

5.12 Power Management

IOH does not support the beacon wake method on PCI Express. IOH supports Active State Power Management (ASPM) transitions into L0s and L1 state. Also, IOH supports the D0 and D3hot power management states per PCI Express port and also supports a wake event from these states on a PCI Express hot-plug event. In D3hot, IOH will master abort all configuration TX targeting the PCI Express link.

5.13 Enterprise South Bridge Interface (ESI)

The Enterprise South Bridge Interface (legacy port) in the IOH is responsible for sending and receiving packets/commands to legacy components in the system like the ICH. PCI Express link and uses the same physical/link layers as described in the PCI Express Chapter.

Features:

- The ESI port supports x4, x2 and x1 and the width is auto-negotiated at power-on.
- Port bifurcation is NOT supported on ESI i.e. the ESI port is always negotiated as one single port.
- Downgrading is supported from x4 to x2 and x1. Lane reversal is also supported.
- The IOH only supports Gen1 speed.

5.13.1 ESI Port as a PCI Express Gen1 Port

When the LEGACYIOH strap is set to “0” and FWAGNT_ESIMODE strap is set to “1”, the ESI port will work as a Gen1 PCI Express port.

5.13.2 Configuration Retry Completion

The IOH handles configuration retry from ESI similar to configuration retry from PCI Express. Refer to Section 5.4.2 for details of how a PCI Express port handles configuration retry completions.

5.13.3 Inbound Transactions

This section reviews transactions that are supported by IOH coming in from the ESI interface.

5.13.3.1 Memory, I/O and Configuration Transactions Supported

Table 5-11 lists the memory, I/O and Configuration transactions in the ESI port which are expected to be received by the IOH.

Table 5-11. Incoming ESI Memory, I/O and Configuration Requests/Completions

ESI Transaction	Transaction Type	IOH Response
Inbound Write Requests	Memory	Forward to Main Memory, integrated device or PCI Express port depending on address.
	Config	Forward to PCI Express ports (peer or local) or IOH internal config space depending on bus number and device number.
Inbound Read Requests	Memory	Forward to Main Memory, integrated device or PCI Express port depending on address.
	Config	Forward to PCI Express ports (peer or local) or IOH internal config space depending on bus number and device number.
Outbound Write Completions	I/O	Forward to the interface that originated the request which is determined based on the requestor bus number and device number.
	Configuration	
Outbound Read Completions	Memory	Forward to the interface that originated the request which is determined based on the requestor bus number and device number.
	I/O	
	Configuration	

5.13.3.2 Messages Supported

Table 5-12 below lists all messages that are supported by IOH inbound from ESI.

Table 5-12. Incoming ESI Messages

ESI Transaction	Transaction Type	IOH Response
Standard PCI Express Messages	ERR_COR	The ICH will send ERR* messages to the IOH in response to error conditions.
	ERR_NONFATAL	
	ERR_FATAL	
Intel Vendor-defined Messages	Go_C0/S3	Power management related messages.
	Go_C2	
	CPU_Reset_Done_Ack	Reset related messages.
	Rst_Warn	
	INTR_Ack_Reply	Issued by the ICH in response to an "INTR_Ack" message from the IOH. The INTR_Ack_Reply message contains the interrupt vector (from the 8259 controller) and the IOH completes the pending INTR_ACK transaction on Intel® QuickPath Interconnect with the required information. Note that there can be only one outstanding INTR_Ack transaction from the processor.
	Assert_PHLD	The Phold handshake is used to flush the contents of the IOH's downstream write buffers prior to granting the ICH's ISA-legacy bus master logic ownership. ICH generates the Assert_PHLD message to the IOH. IOH flushes and disables downstream write buffers and then generates the Assert_PHLDA message to the ICH. When the ICH's ISA-legacy bus master operations are complete, the ICH generates the Deassert_PHLD message to IOH.
	Deassert_PHLD	

5.13.3.3 Configuration Retry Completion

IOH handles configuration retry from ESI similar to configuration retry from PCI Express. Refer to Section 5.4.2, "Configuration Retry Completions" on page 92 for details of how an Express port handles configuration retry completions.

5.13.4 Outbound Transactions

This section describes outbound transactions supported by the IOH on the ESI link.

5.13.4.1 Outbound Memory, I/O and Configuration Transactions Supported

Table 5-13 lists the outbound memory, I/O and Configuration requests and completions supported by the IOH on ESI.

Table 5-13. Outgoing ESI Memory, I/O and Configuration Requests/Completions

ESI Transaction	Transaction Type	Reason for Issue
Outbound Write Requests	Memory	Processor or peer memory-mapped I/O write targeting ICH.
	I/O	Processor or peer legacy I/O write targeting ICH.
	Configuration	Processor or peer Configuration write targeting ICH.
Outbound Read Requests	Memory	Processor or memory-mapped I/O read targeting ICH
	I/O	Processor or PCI Express I/O read targeting ICH.
	Configuration	Configuration read targeting ICH.
Inbound Read Completions	Memory	Response for an inbound read to main memory, integrated device or PCI Express.

5.13.4.2 Outbound Messages Supported

Table 5-14 lists all outbound messages supported by the IOH on ESI.

Table 5-14. Outgoing ESI Messages (Sheet 1 of 2)

ESI Transaction	Transaction Type	Reason for Issue
Standard PCI Express Messages	Unlock	When a locked read or write transaction was previously issued to the ESI, “Unlock” releases the PCI lock.
	Assert_INTA Assert_INTB Assert_INTC Assert_INTD Deassert_INTA Deassert_INTB Deassert_INTC Deassert_INTD	Issued by the IOH through the ESI port when a PCI Express interface receives a legacy interrupt message on its standard PCI Express ports or generates them internally. Note that these events are level sensitive at the source and the IOH will send an aggregated message (wired-or) to the ESI for each interrupt level. Refer to the Chapter 8, “Interrupts” for further details of how these messages are handled through the IOH from the receiving PCI Express interface.

Table 5-14. Outgoing ESI Messages (Sheet 2 of 2)

ESI Transaction	Transaction Type	Reason for Issue
Intel Vendor-defined Messages	PM_Active_State_ NAK	The IOH will generate the "PM_Active_State_NAK" message to the ICH in response to receiving a "PM_Active_State_Request_L1" DLLP because the IOH cannot transition to the L1 state. Refer to *PCI Express Base Specification*, Revision 2.0 for further details on the L1 ASPM flow.
	Rst_Warn_Ack	The IOH sends the Acknowledge in response to a prior "Rst_Warn" message. Refer to the Chapter 14, "Reset" for details of the IOH reset flow and how this message is handled.
	EOI	The IOH will broadcast an EOI encoded as a TLP Data message with EOI vector embedded in the payload. Refer Section 5.5.3.2 for details of the EOI broadcast.
	Assert_GPE Deassert_GPE	The IOH will forward a collapsed version of the Assert_GPE and Deassert_GPE it receives from its PCI Express ports. Refer to Section 5.3.7.1 for further details.
	Assert_HPGPE Deassert_HPGPE	The IOH will send a hot-plug GPE message, "Assert_HPGPE" when a hot-plug event is detected (and native OS handling of hot-plug is disabled). The "Deassert_HPGPE" is sent when the hot-plug event has been serviced.
	Assert_PMEGPE Deassert_ PMEGPE	The IOH will send a "Assert_PMEGPE" when a Power Management event is detected (and native OS handling of hot-plug is disabled). The "Deassert_PMEGPE" is sent when the Power Management event has been completed.
	Ack_C0	Refer to the Chapter 10, "Power Management" for details.
	Ack_S3	
	Ack_C2	
	CPU_Reset_Done	Reset related message. Refer to the Chapter 14, "Reset" for further details.
	INTR_Ack	Issued by the IOH when the Processor sends an interrupt acknowledge command on Intel QuickPath Interconnect. This is treated as an outbound posted message and sent to the ICH. There can be only one INTR_Ack outstanding from the processor at a time.
	DO_SCI	Needed for Intel QuickPath Interconnect-based ACPI events

5.13.4.3 Lock Support

For legacy PCI functionality, the IOH supports bus locks to the ESI port.

5.13.4.4 PHOLD Support

The IOH supports the PHOLD protocol. This protocol is used for legacy ISA devices which do not allow the possibility for being both a master and a slave device simultaneously. Example devices that use the PHOLD protocol are legacy floppy drives, and so on.

5.13.4.5 PHOLD / PHOLDA

A PHOLD regime is established when IOH issues an Assert_PHLDA message to ESI and is terminated when the IOH receives a Deassert_PHLD message on ESI. The IOH will not send posted or non-posted requests to ESI port during a PHOLD regime and will only allow downstream completions. All non-posted peer-to-peer traffic should be disabled during the PHOLD regime to avoid deadlock situations within IOH.

5.13.4.6 ICH Behavior

Once ICH has sent an Assert_PHLD message, it will not send a Deassert_PHLD message until the IOH has sent an Assert_PHLDA message.

5.13.4.6.1 Intel® QuickPath Interconnect Lock Request

When the IOH receives an Assert_PHLD message on ESI, it will generate a request to lock arbiter.

5.13.4.6.2 Block All Sources of Transactions

Once the Intel QuickPath Interconnect lock is established, the IOH flushes the queues and sends an Assert_PHLDA message to ICH on the ESI.

5.13.5 64-Bit Addressing

For processor and peer-to-peer writes and reads, the IOH supports 64-bit address format on the ESI to and from the ICH.

5.13.6 Transaction Descriptor

The Transaction Descriptor comprises three sub-fields:

- Transaction ID
- Attributes
- Traffic Class

5.13.6.1 Transaction ID

The Transaction ID uniquely identifies every transaction in the system. The Transaction ID comprises four sub-fields described in Table 5-15, “ESI Transaction ID Handling”.

Table 5-15. ESI Transaction ID Handling

Field	Definition	IOH as Requester	IOH as Completer
Bus Number	Specifies the bus number that the requester resides on.	The IOH fills this field in with its internal Bus Number that the ESI cluster resides on (refer to the Chapter 21, "Configuration Register Space" for details.	The IOH preserves this field from the request and copies it into the completion.
Device Number	Specifies the device number of the requester.	9	
Function Number	Specifies the function number of the requester.	0	
Tag	Unlike PCI Express this field is allowed to be non-unique on ESI. IOH as a requester will not use non-unique TID on ESI but as a completer will preserve any original request TID.	Non-Posted (NP) Transaction: The IOH fills this field in with a value such that every pending request carries a unique Tag. NP Tag[7:4]=Intel QuickPath Interconnect Source NodeID[4:1]. Note that bits [7:5] can be non-zero only when 8-bit tag usage is enabled (in the P2P register corresponding to the ESI port). Otherwise, the IOH always zeros out bits [7:5]. NP Tag[3:0]=Any algorithm that guarantees uniqueness across all pending NP requests from the port. Posted Transaction: No uniqueness guaranteed. Tag[7:0]=Intel QuickPath Interconnect Source NodeID[7:0] for processor requests. Note that bits [7:5] can be non-zero only when 8-bit tag usage is enabled. Otherwise, IOH always zeros out bits [7:5].[1]	

Notes:

1. The IOH never uses non-unique tag as requester on ESI.

5.13.6.2 Attributes

ESI supports two attribute hints described in Table 5-16.

Table 5-16. ESI Attribute Handling

Attribute	Definition	IOH as Requester	IOH as Completer
Relaxed Ordering	Allows the system to relax some of the standard PCI ordering rules.	For outbound transactions, this bit is not applicable and set to zero. For peer-to-peer requests, preserve this field from the source PCI Express port to the destination port.	The IOH preserves this field from the request and copies it into the completion.
Snoop Not Required	This attribute is set when an I/O device controls coherency through software mechanisms. This attribute is an optimization designed to preserve processor snoop bandwidth.		

The IOH supports ESI virtual channels VC0, VC1, and VCp.

5.13.7 Completer ID

The CompleterID field is used in ESI completion packets to identify the completer of the transaction. The CompleterID comprises three sub-fields described in Table 5-17. The table provides details on how this field is populated by the IOH for completions it generates to ESI.

Table 5-17. ESI CompleterID Handling

Field	Definition	IOH as Completer
Bus Number	Specifies the bus number that the completer resides on.	The IOH fills this field in with its internal Bus Number that the ESI cluster resides on.
Device Number	Specifies the device number of the completer.	9
Function Number	Specifies the function number of the completer.	0

5.14 Flow Control Credits Advertised on ESI

The ESI port flow control credits advertised are described in Table 5-18.

Table 5-18. ESI Credit Mapping

Flow Control Type	Definition	Initial IOH Advertisement
Posted Request Header Credits (PRH)	Tracks the number of posted requests the agent is capable of supporting. Each credit accounts for one posted request.	24
Posted Request Data Credits (PRD)	Tracks the number of posted data the agent is capable of supporting. Each credit accounts for up to 16 bytes of data.	48
Non-Posted Request Header Credits (NPRH)	Tracks the number of non-posted requests the agent is capable of supporting. Each credit accounts for one non-posted request.	16
Non-Posted Request Data Credits (NPRD)	Tracks the number of non-posted data the agent is capable of supporting. Each credit accounts for up to 16 bytes of data.	1
Completion Header Credits (CPH)	Tracks the number of completion headers the agent is capable of supporting.	infinite
Completion Data Credits (CPD)	Tracks the number of completion data the agent is capable of supporting. Each credit accounts for up to 16 bytes of data.	infinite

§

6 Ordering

6.1 Introduction

The IOH spans two different ordering domains: one that adheres to Producer-Consumer ordering (PCI Express) and one that is completely unordered (Intel QuickPath Interconnect). One of the primary functions of the IOH is to ensure that the Producer-Consumer ordering model is maintained in the unordered, Intel QuickPath Interconnect domain.

This section describes the rules that are required to ensure that both PCI Express and Intel QuickPath Interconnect ordering is preserved. Throughout this chapter, the following terms are used:

Table 6-1. Ordering Term Definitions

Term	Definition
Intel QuickPath Interconnect Ordering Domain	The Intel QuickPath Interconnect has a relaxed ordering model allowing reads, writes and completions to flow independent of each other. Intel QuickPath Interconnect implements this through the use of multiple, independent virtual channels. In general, the Intel QuickPath Interconnect ordering domain is considered unordered.
PCI Express Ordering Domain	PCI Express (and all other prior PCI generations) have specific ordering rules to enable low cost components to support the Producer-Consumer model. For example, no transaction can pass a write flowing in the same direction. In addition, PCI implements ordering relaxations to avoid deadlocks (for example, completions must pass non-posted requests). The set of these rules are described in *PCI Express Base Specification*, Revision 1.0a.
Posted	A posted request is a request which can be considered ordered (per PCI rules) upon the issue of the request and therefore completions are unnecessary. The only posted transaction is PCI memory writes. Intel QuickPath Interconnect does not implement posted semantics and so to adhere to the posted semantics of PCI, the rules below are prescribed.
Non-posted	A non-posted request is a request which cannot be considered ordered (per PCI rules) until after the completion is received. Non-posted transactions include all reads and some writes (I/O and configuration writes). Since Intel QuickPath Interconnect is largely unordered, all requests are considered to be non-posted until the target responds. Throughout this chapter, the term non-posted applies only to PCI requests.
Outbound Read	A read issued toward a PCI Express device. This can be a read issued by a processor, an SMBus master, or a peer IOH (in the context of the target IOH).
Outbound Read Completion	The completion for an outbound read. For example, the read data which results in a processor read of a PCI Express device. *Note that while the data flows inbound, the completion is still for an outbound read.*
Outbound Write	A write issued toward a PCI Express device. This can be a write issued by a processor, an SMBus master, or a peer IOH (in the context of the target IOH).
Outbound Write Completion	The completion for an outbound write. For example, the completion from a PCI Express device which results in a processor-initiated I/O or configuration write. *Note that while the completion flows inbound, the completion is still for an outbound write.*
Inbound Read	A read issued toward an Intel® QuickPath Interconnect component. This can be a read issued by a PCI Express device. An obvious example is a PCI Express device reading main memory.
Inbound Read Completion	The completion for an inbound read. For example, the read data which results in a PCI Express device read to main memory. *Note that while the data flows outbound, the completion is still for an inbound read.*
Inbound Write	A write issued toward an Intel QuickPath Interconnect component. This can be a write issued by a PCI Express device. An obvious example is a PCI Express device writing main memory. In the Intel QuickPath Interconnect domain, this write is often fragmented into a request-for-ownership followed by an eventual writeback to memory.
Inbound Write Completion	Does not exist. All inbound writes are considered posted (in the PCI Express context) and therefore, this term is never used in this chapter.

6.2 Inbound Ordering Rules

Inbound transactions originate from PCI Express and target main memory. In general, the IOH forwards inbound transactions in FIFO order. There are exceptions to this under certain situations. For example, PCI Express requires that read completions are allowed to pass stalled read requests. This forces any read completions to bypass any reads which might be back pressured on the Intel QuickPath Interconnect. Sequential, non-posted requests are not required to be completed in the order they were requested.[1]

Inbound writes cannot be posted beyond the PCI Express ordering domain. The posting of writes relies on the fact that the system maintains a certain ordering relationship. Since the IOH cannot post inbound writes beyond the PCI Express ordering domain, the IOH must wait for snoop responses before issuing subsequent, order-dependent transactions.

Each of the Intel QuickPath Interconnect ports have no ordering relationship to each other. The IOH relaxes ordering between different PCI Express ports (aside from the peer-to-peer restrictions below).

6.2.1 Inbound Ordering Requirements

In general, there are no ordering requirements between transactions received on different PCI Express interfaces. However, the rules below apply to inbound transactions received on the same interface.

Rule 1. Outbound non-posted read and non-posted write completions must be allowed to progress past stalled inbound non-posted requests.

Rule 2. Inbound posted write requests and messages must be allowed to progress past stalled inbound non-posted requests.

Rule 3. Inbound posted write requests, inbound messages, inbound read requests, outbound non-posted read and outbound non-posted write completions cannot pass enqueued inbound posted write requests.

The Producer - Consumer model prevents read requests, write requests, and non-posted read or non-posted write completions from passing write requests. Refer to *PCI Local Bus Specification*, Revision 2.3 for details on the Producer - Consumer ordering model.

Rule 4. Outbound non-posted read or outbound non-posted write completions must push ahead *all* prior inbound posted transactions from that PCI Express port.

Rule 5. The IOH is unaware of which destination I/O bus (for example, PCI-X* on the PXH) the read completion comes for outbound transactions. Therefore, the IOH prevents forwarding the read or non-posted write completion to the Intel QuickPath Interconnect until all currently enqueued inbound writes are complete (independent of the VC value).

Rule 6. Inbound, coherent, posted writes will issue requests for ownership (RFO) without waiting for prior ownership requests to complete. Local-local address conflict checking still applies.

Rule 7. Inbound messages follow the same ordering rules as inbound posted writes (FENCE messages have their own rules).

Similarly to inbound posted writes, reads should push these commands ahead.

1. The ESI interface has exceptions to this rule specified in Section 6.2.1.

Rule 8. If an inbound read completes with multiple sub-completions (for example, a cache line at a time), those sub-completions must be returned on PCI Express in linearly increasing address order.

The above rules apply whether the transaction is coherent or non-coherent. Some regions of memory space are considered non-coherent (for example, the Don't Snoop attribute is set). The IOH will order all transactions regardless of its destination.

Rule 9. For PCI Express ports, different read requests should be completed without any ordering dependency. For the ESI interface, however, all read requests with the same Tag must be completed in the order that the respective requests were issued.

Different read requests issued on a PCI Express interface should be completed in any order. This attribute is beneficial for the Intel Xeon processor 7500 series-based platform and Intel Itanium processor 9300 series-based platform where the Intel QuickPath Interconnect is an unordered, multipath interface. However, the read completion ordering restriction on ESI implies that the IOH must guarantee stronger ordering on that interface.

6.2.2 Special Ordering Relaxations

The *PCI Express Base Specification*, Revision 1.0a specifies that reads do not have any ordering constraints with other reads. Therefore if one read is blocked (on either Intel® QuickPath Interconnect or PCI Express) then subsequent reads will proceed. An example of why a read would be blocked is the case of an Intel QuickPath Interconnect address conflict. Under such a blocking condition, subsequent transactions are allowed to proceed until the blocking condition is cleared.

PCI Express allows inbound write requests to pass outbound read and outbound non-posted write completions. For peer-to-peer traffic, this optimization allows writes to memory to make progress while a PCI Express device is making long read requests to a peer device on the same interface.

6.2.2.1 PCI Express* Relaxed Ordering

The relaxed ordering attribute (RO) is a bit in the header of every PCI Express packet and relaxes the ordering rules such that:

- Posted requests with RO set can pass other posted requests.
- Non-posted completions with RO set can pass posted requests.

The IOH relaxes write ordering for non-coherent, DRAM write transactions with this attribute set. The IOH does not relax the ordering between read completions and outbound posted transactions.

With the exception of peer-to-peer requests, the IOH clears the relaxed ordering for outbound transactions received from the Intel QuickPath Interconnect interface. For local transaction, the attribute is preserved for both requests and completions.

6.3 Outbound Ordering Rules

Outbound transactions through the IOH are memory, I/O or configuration read/write transactions originating on an Intel QuickPath Interconnect interface destined for a PCI Express or ESI device. Subsequent outbound transactions with different destinations

have no ordering requirements between them. Multiple transactions destined for the same outbound port are ordered according to the ordering rules specified in *PCI Express Base Specification,* Revision 2.0.

Note: On the Intel QuickPath Interconnect, non-coherent writes are not considered complete until the IOH returns a Cmp for the NcWr transaction. On PCI Express and ESI interfaces, memory writes are posted. The IOH returns this completion once the write is guaranteed to meet the PCI Express ordering rules and is part of the "ordered domain". For outbound writes that are non-posted in the PCI Express domain (for example, I/O and configuration writes), the target device will post the completion.

6.3.1 Outbound Ordering Requirements

There are no ordering requirements between outbound transactions targeting different outbound interfaces. For deadlock avoidance, the following rules must be ensured for outbound transactions targeting the same outbound interface:

Rule 1. Inbound non-posted completions must be allowed to progress past stalled outbound non-posted requests.

Rule 2. Outbound posted requests must be allowed to progress past stalled outbound non-posted requests.

Rule 3. Outbound non-posted requests and inbound completions cannot pass enqueued outbound posted requests.

The Producer - Consumer model prevents read requests, write requests, and read completions from passing write requests. Refer to *PCI Local Bus Specification*, Revision 2.3 for details on the Producer - Consumer ordering model.

Rule 4. If a non-posted inbound request requires multiple sub-completions, those sub-completions must be delivered on PCI Express in linearly addressing order.

This rule is a requirement of the PCI Express protocol. For example, if the IOH receives a request for 4 KB on the PCI Express interface and this request targets the Intel QuickPath Interconnect port (main memory), the IOH splits up the request into multiple 64 B requests. Since the Intel QuickPath Interconnect is an unordered domain, it is possible that the IOH receives the second cache line of data before the first. Under such unordered situations, the IOH must buffer the second cache line until the first one is received and forwarded to the PCI Express requester.

Rule 5. If a configuration write transaction targets the IOH, the completion must not be returned to the requester until after the write has actually occurred to the register.

Writes to configuration registers could have side-effects and the requester expects that it has taken effect prior to receiving the completion for that write. The IOH will not respond to the configuration write until after the register is actually written (and all expected side-effects have completed).

6.3.2 Hinted Peer-to-Peer

There are no specific IOH requirements for hinted peer-to-peer since PCI ordering is maintained on each PCI Express port.

6.3.3 Local Peer-to-Peer

Local peer-to-peer transactions flow through the same inbound ordering logic as inbound memory transactions from the same PCI Express port. This provides a serialization point for proper ordering.

When the inbound ordering logic receives a peer-to-peer transaction, the ordering rules require that it must wait until all prior inbound writes from the same PCI Express port are completed on the Intel QuickPath Interconnect interface. Local peer-to-peer write transactions complete when the outbound ordering logic for the target PCI Express port receives the transaction and returns the completion to the initiating IOH. Local peer-to-peer read transactions are completed by the target device.

6.4 Interrupt Ordering Rules

SAPIC and IOxAPIC interrupts are either directed to a single processor or broadcast to multiple processors. The IOH treats interrupts as posted transactions. This enforces that the interrupt will not be observed until after all prior inbound writes are flushed to their destinations. For broadcast interrupts, order-dependent transactions received after the interrupt must wait until all interrupt completions are received by the IOH.

Interrupts are treated as posted transactions; therefore the ordering rule that read completions push interrupts naturally applies. For example:

- An interrupt generated by a PCI Express interface must be ordered with read completions from configuration registers within that same PCI Express root port.
- Read completions from the integrated IOxAPIC's registers (configuration and memory-mapped I/O space) must push all interrupts generated by the integrated IOxAPIC.
- Read completions from the Intel VT-d registers must push all interrupts generated by the Intel VT-d logic (for example, an error condition). Intel Xeon processor 7500 series-based platform only.

6.4.1 SpcEOI Ordering

When a processor receives an interrupt, it will process the interrupt routine. The processor will then clear the I/O card's interrupt by writing to that I/O device's register. The EOI request is treated as an outbound posted transaction with regard to ordering rules.

6.4.2 SpcINTA Ordering

The legacy 8259 controller can interrupt a processor through a virtual INTR pin (virtual legacy wire). The processor responds to the interrupt by sending an interrupt acknowledge transaction reading the interrupt vector from the 8259 controller. After reading the vector, the processor will jump to the interrupt routine.

The Intel QuickPath Interconnect implements an IntAck message to read the interrupt vector from the 8259 controller. With respect to ordering rules, the Intr_Ack message (always outbound) is treated as a posted request. The completion returns to the IOH on ESI as an Intr_Ack_Reply (also posted). The IOH translates this into a completion for the Intel® QuickPath Interconnect Intr_Ack message.

6.5 Configuration Register Ordering Rules

The IOH implements legacy PCI configuration registers. These registers are accessed with NcCfgRd and NcCfgWr transactions (using PCI Bus, Device, Function) received on the Intel QuickPath Interconnect interface.

For PCI configuration space, the ordering requirements are the same as standard, non-posted configuration cycles on PCI. Refer to Section 6.2.1 and Section 6.3.1 for details. Furthermore, on configuration writes to the IOH the completion is returned by the IOH only after the data is actually written into the register.

6.6 Intel® Virtualization Technology (Intel® VT) for Directed I/O (Intel® VT-d) Ordering Exceptions

The transaction flow to support the address remapping feature of Intel® Virtualization Technology (Intel® VT) for Directed I/O (Intel® VT-d) requires that the IOH reads from an address translation table stored in memory. This table read has the added ordering requirement that it must be able to pass all other inbound non-posted requests (including non-table reads). If not for this bypassing requirement, there would be an ordering dependence on peer-to-peer reads resulting in a deadlock.

§

7 System Address Map

This chapter provides a basic overview of the system address map and describes how the IOH comprehends and decodes the various regions in the system address map. The term "IOH" in this chapter refers to the IOH in multiprocessor End Point and multiprocessor Route-Through modes. This chapter does not provide the full details of the Intel Xeon processor 7500 series based and Intel Itanium processor 9300 series-based platform system address spaces as viewed by software and it also does not provide the details of processor address decoding.

The IOH supports the full 51 bits [50:0] of memory addressing on its Intel QuickPath Interconnect interface. The IOH also supports receiving and decoding 64 bits of address from PCI Express. Memory transactions received from PCI Express that go above the top of physical address space supported on Intel QuickPath Interconnect (which is dependent on the Intel QuickPath Interconnect profile but is always less than or equal to 2^51 for the IOH) are reported as errors by IOH. The IOH as a requester would never generate requests on PCI Express with any of address bits 63 to 51 set. For packets the IOH receives from Intel QuickPath Interconnect and for packets the IOH receives from PCI Express that fall below the top of Intel QuickPath Interconnect physical address space, the upper address bits from top of Intel QuickPath Interconnect physical address space up to bit 63 must be considered as 0s for target address decoding purposes. The IOH always performs full 64-bit target address decoding.

The IOH supports 16 bits of I/O addressing on its Intel QuickPath Interconnect interface. The IOH also supports receiving and decoding the full 32 bits of I/O address from PCI Express. I/O requests received from PCI Express that are beyond 64 KB are reported as errors by the IOH. The IOH as a requester would never generate I/O requests on PCI Express with any of address bits 31 to 16 set.

The IOH supports PCI configuration addressing up to 256 buses, 32 devices per bus and 8 functions per device. A single grouping of 256 buses, 32 devices per bus and 8 functions per device is referred to as a PCI *segment*. Intel Xeon processor 7500 series and Intel Itanium processor 9300 series source decoder supports multiple PCI segments in the system. However, all configuration addressing within an IOH and hierarchies below an IOH must be within one segment. The IOH does not support being in multiple PCI segments.

7.1 Memory Address Space

Figure 7-1 shows the Intel Xeon processor 7500 series-based platform and Intel Itanium processor 9300 series-based platform system memory address spaces. There are three basic regions of memory address space in the system: address below 1 MB, address between 1 MB and 4 GB, and address above 4 GB. These regions are described in the following sections.

Throughout this section, there will be references to the *subtractive decode port*. It refers to the port of the IOH that is attached to a legacy ICH or provides a path towards the legacy ICH. This port is also the recipient of all addresses that are not positively decoded towards any PCI Express device or towards memory.

Figure 7-1. System Address Map

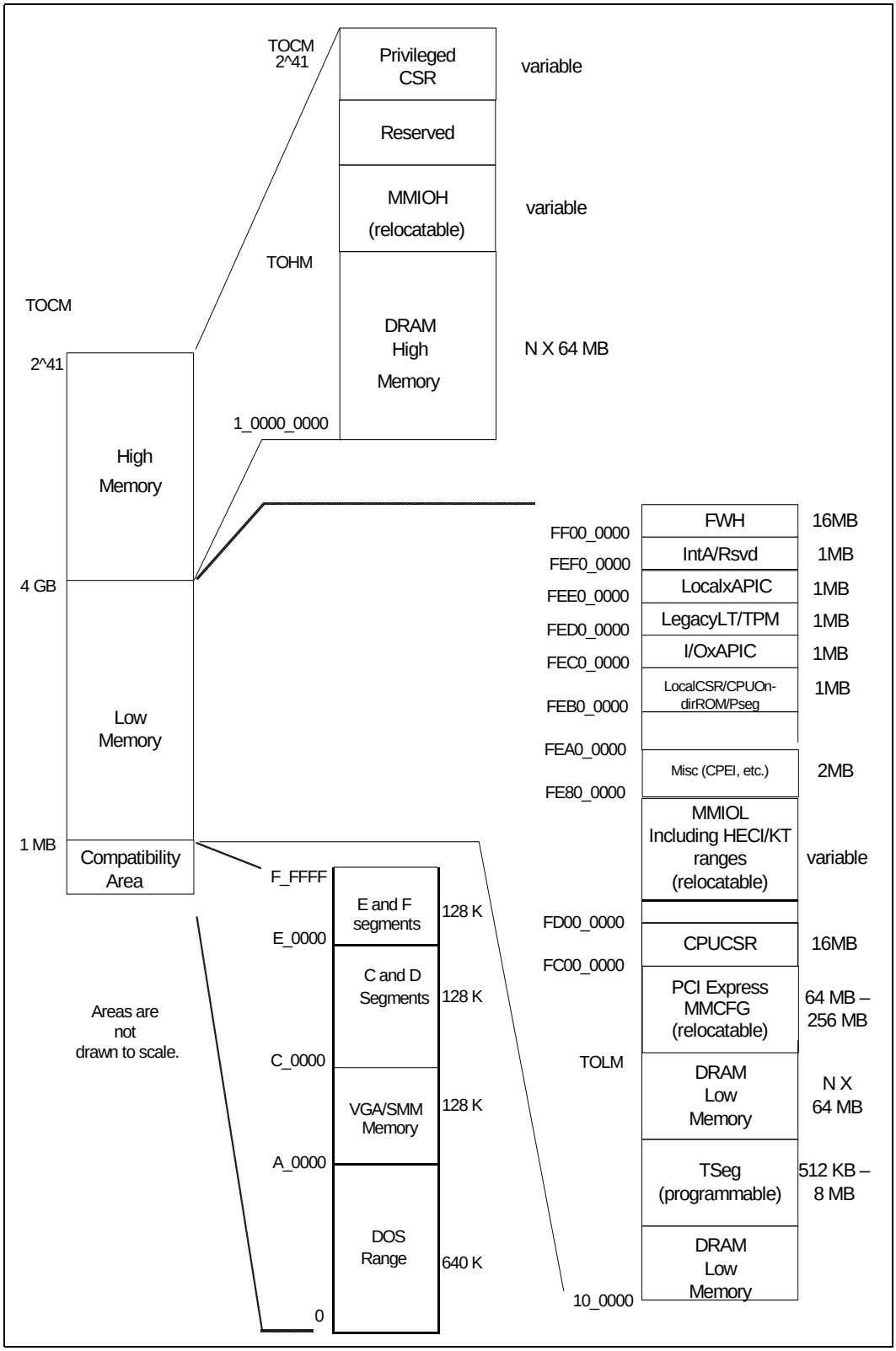

7.1.1 System DRAM Memory Regions

Address Region	From	To
640 KB DOS Memory	000_0000_0000	000_0009_FFFF
1 MB to Top-of-low-memory	000_0010_0000	TOLM
Bottom-of-high-memory to Top-of-high-memory	4 GB	TOHM

These address ranges are always mapped to system DRAM memory, regardless of the system configuration. The top of main memory below 4 G is defined by the Top of Low Memory (TOLM). Memory between 4 GB and TOHM is extended system memory. Since the platform may contain multiple processors, the memory space is divided amongst the CPUs. There may be memory holes between each processor's memory regions. These system memory regions are either coherent or non-coherent. A set of range registers in the IOH define a non-coherent memory region (NcMem.Base/NcMem.Limit) within the system DRAM memory region shown above. System DRAM memory region outside of this range but within the DRAM region shown in table above is considered coherent.

For inbound transactions, the IOH positively decodes these ranges via a couple of software programmable range registers. For outbound transactions, it would be an error for IOH to receive non-coherent accesses to these addresses from Intel QuickPath Interconnect. However, the IOH does not explicitly check for this error condition and simply forwards such accesses to the subtractive decode port, if one exists downstream, by virtue of subtractive decoding.

7.1.2 VGA/SMM and Legacy C/D/E/F Regions

Figure 7-2 shows the memory address regions below 1 MB. These regions are legacy access ranges.

Figure 7-2. VGA/SMM and Legacy C/D/E/F Regions

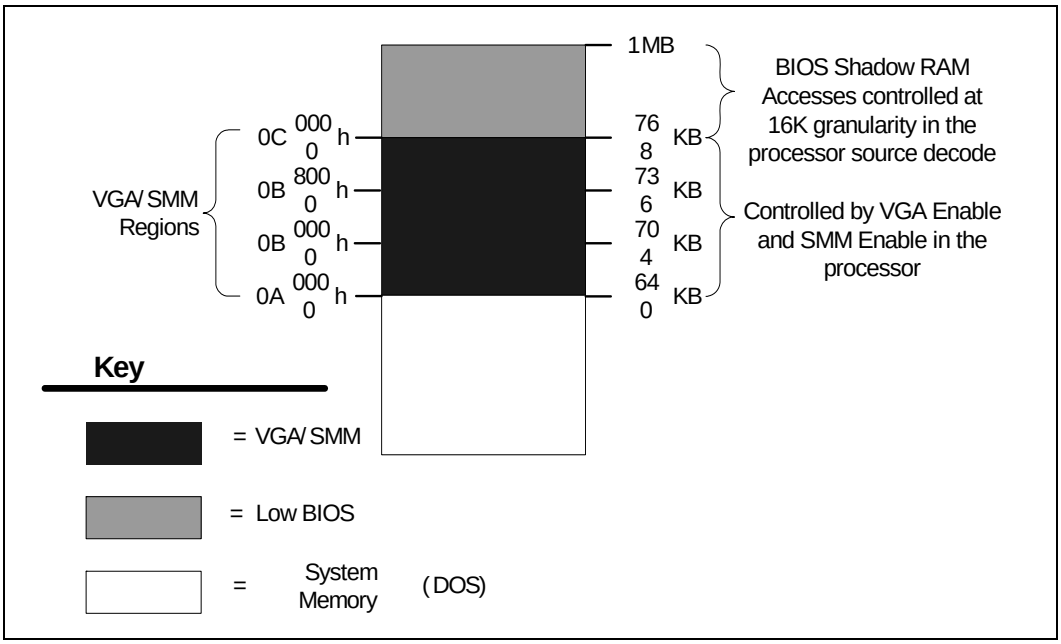

7.1.2.1 VGA/SMM Memory Space

Address Region	From	To
VGA	000_000A_0000	000_000B_FFFF

This legacy address range is used by video cards to map a frame buffer or a character-based video buffer. By default, accesses to this region are forwarded to main memory by the processor. However, once firmware figures out where the VGA device is in the system, it sets up the processor's source address decoders to forward these accesses to the appropriate IOH. If the VGAEN bit is set in the IOH PCI bridge control register (BCR) of a PCI Express port, then transactions within the VGA space (defined above) are forwarded to the associated port, regardless of the settings of the peer-to-peer memory address ranges of that port. If none of the PCI Express ports have the VGAEN bit set (note that per the IOH address map constraints the VGA memory addresses cannot be included as part of the normal peer-to-peer bridge memory apertures in the root ports), then these accesses are forwarded to the subtractive decode port. Also refer to the *PCI-PCI Bridge 1.2 Specification* for further details on the VGA decoding. Note that only one VGA device may be enabled per system partition. The VGAEN bit in the PCIe bridge control register must be set only in one PCI Express port in a system partition. The IOH does not support the MDA (monochrome display adapter) space independent of the VGA space.

The VGA memory address range can also be mapped to system memory in SMM. The IOH is totally transparent to the workings of this region in the SMM mode. All outbound and inbound accesses to this address range are always forwarded to the VGA device of the partition, by the IOH. Refer to the Table 7-4 and Table 7-5 for further details of inbound and outbound VGA decoding.

For IOH based platforms, at boot time, the VGA port must be in the legacy IOH and can not be in any non-legacy IOH. Because legacy IO ranges are decoded only by the Legacy IOH, during BIOS boot and until the driver loads in the OS, the device must be used behind the non-legacy IOH. This is because the Legacy IO ranges are used to communicate to the device during initial boot. Once an OS level driver loads, the driver may know how to talk to the device using non-legacy resources. At that point, video behind a non-legacy IOH should work if a driver is loaded that supports that functionality and addressing.

7.1.2.2 C/D/E/F Segments

The E/F region could be used to address DRAM from an I/O device (processors have registers to select between addressing bios flash and dram). IOH does not explicitly decode the E/F region in the outbound direction and relies on subtractive decoding to forward accesses to this region to the legacy ICH. IOH does not explicitly decode inbound accesses to the E/F address region. It is expected that the DRAM low range that IOH decodes will be setup to cover the E/F address range. By virtue of that, the IOH will forward inbound accesses to the E/F segment to system DRAM. If it is necessary to block inbound access to these ranges, the Generic Memory Protection Ranges could be used.

C/D region is used in system DRAM memory for BIOS and option ROM shadowing. The IOH does not explicitly decode these regions for inbound accesses. Software must program one of the system DRAM memory decode ranges that the IOH uses for inbound system memory decoding to include these ranges.

All outbound accesses to the C through F regions are first positively decoded against all valid targets' address ranges and if none match, these address are forwarded to the subtractive decode port of the IOH, if one exists; else it is an error condition.

The IOH will complete locks to this range, but cannot guarantee atomicity when writes and reads are mapped to separate destinations.

7.1.3 Address Region Between 1 MB and TOLM

This region is always allocated to system DRAM memory. Software must set up one of the coarse memory decode ranges that IOH uses for inbound system memory decoding to include this address range. The IOH will forward inbound accesses to this region to system memory (unless any of these access addresses fall within a protected dram ranges protected as described in Chapter 7, "Protected System DRAM Regions"). It would be an error for IOH to receive outbound accesses to an address in this region, other than snoop requests from Intel QuickPath Interconnect links. However, the IOH does not explicitly check for this error condition, and simply forwards such accesses to the subtractive decode port.

Any inbound access that decodes within one of the two coarse memory decode windows with no physical DRAM populated for that address will result in a master abort response on PCI Express.

7.1.3.1 Relocatable TSeg

Address Region	From	To
TSeg	FE00_0000 (default)	FE7F_FFFF (default)

These are system DRAM memory regions that are used for SMM/CMM mode operation. IOH would completer abort all inbound transactions that target these address ranges. IOH should not receive transactions that target these addresses in the outbound direction, but IOH does not explicitly check for this error condition but rather subtractively forwards such transactions to the subtractive decode port of the IOH, if one exists downstream.

The location (1 MB aligned) and size (from 512 KB to 8 MB) in IOH can be programmed by software.

7.1.4 Address Region from TOLM to 4 GB

7.1.4.1 PCI Express Memory Mapped Configuration Space

This is the system address region that is allocated for software to access the PCI Express Configuration Space. This region is relocatable below 4 GB by BIOS/firmware; the IOH has no explicit knowledge of this address range. All inbound and outbound accesses to this region are sent to the subtractive decode port of the IOH by virtue of subtractive decoding. It is the responsibility of software to make sure that this system address range is not included in any of the system DRAM memory ranges that the IOH decodes inbound. Otherwise, these addresses could potentially be sent to the processor by the IOH.

7.1.4.2 MMIOL

Address Region	From	To
MMIOL	GMMIOL.Base	GMMIOL.Limit

This region is used for PCI Express device memory addressing below 4 GB. Each IOH in the system is allocated a portion of this address range; individual PCI Express ports within an IOH use sub-portions within that range. Each IOH has MMIOL address range registers (LMMIOL and GMMIOL) to support local peer-to-peer in the MMIOL address range. Refer to Section 7.5 for details of how these registers are used in the inbound and outbound MMIOL range decoding.

7.1.4.3 CPU CSR Memory Space

Address Region	From	To
CPU CSRs	FC00_0000	FCFF_FFFF

This range is used to accommodate the CSR registers in the processors. The IOH should not receive any inbound transactions from its PCI Express ports towards this address range. If such inbound accesses occur, they are aborted and IOH returns a completer abort response. The IOH should not receive any outbound transactions from any Intel QuickPath Interconnect link to this address range. However, the IOH does not explicitly check for this error condition, and simply forwards these outbound transactions to the subtractive decode port, if one exists downstream. Refer to Section 7.5.1 for further details.

7.1.4.4 Miscellaneous (Misc)

This region is used by the processor for miscellaneous functionality including an address range that software can write to generate interrupt messages on Intel QuickPath Interconnect, and so on. The IOH aborts all inbound accesses to this region. Outbound accesses to this region is not explicitly decoded by IOH and are forwarded to downstream subtractive decode port, if one exists; it is otherwise master aborted.

Address Region	From	To
Misc	FE80_0000	FE9F_FFFF

7.1.4.5 Processor Local CSR

Address Region	From	To
CPU Local CSR	FEB0_0000	FEBF_FFFF

This region accommodates processor's local CSRs. The IOH will block all inbound accesses from PCI Express to this address region and return a completer abort response. Outbound accesses to this address range are not part of the normal programming model and the IOH subtractively sends such accesses to the subtractive decode port of the IOH, if one exists downstream (else, error).

7.1.4.6 I/OxAPIC Memory Space

Address Region	From	To
I/OxAPIC	FEC0_0000	FECF_FFFF

This is a 1 MB range used to map I/OxAPIC Controller registers. The I/OxAPIC spaces are used to communicate with I/OxAPIC interrupt controllers that may be populated in the downstream devices, such as PXH, and the IOH's integrated I/OxAPIC. The I/OxAPIC space is divided among the IOHs in the system. Each IOH can be associated with an I/OxAPIC range. The range can be further divided by various downstream ports in the IOH and the integrated I/OxAPIC. Each downstream port in the IOH contains a Base/Limit register pair (APICBase/APICLimit) to decode its I/OxAPIC range. Addresses that fall within this range are forwarded to that port. Similarly, the integrated I/OxAPIC decodes its I/OxAPIC base address via the ABAR register (refer to Chapter 21, "Configuration Register Space"). The range decoded via the ABAR register is a fixed size of 256B. Note that the integrated I/OxAPIC also decodes a standard PCI-style 32-bit BAR (located in the PCI defined BAR region of the PCI header space) that is 4 KB in size, called the MBAR register (refer to Chapter 21, "Configuration Register Space"). The MBAR register is provided so that the I/OxAPIC can be placed anywhere in the 4 G memory space.

Only outbound accesses are allowed to this FEC address range and also to the MBAR region. Inbound accesses to this address range return a completer abort response. Outbound accesses to this address range that are not positively decoded towards any one PCI Express port are sent to the subtractive decode port of the IOH. Refer to Section 7.5.1, "Outbound Address Decoding" and Section 7.5.2, "Inbound Address Decoding" for details of outbound address decoding to the I/OxAPIC space.

Accesses to the I/OxAPIC address region (APIC Base/APIC Limit) of each root port, are decoded by the IOH irrespective of the setting of the MemorySpaceEnable bit in the root port peer-to-peer bridge register.

7.1.4.7 HPET/Others

Address Region	From	To
HPET/Others	FED0_0000	FEDF_FFFF

This region covers the High performance event timers, and so on, in the ICH. All inbound/peer-to-peer accesses to this region are completer aborted by the IOH.

Outbound non-locked Intel QuickPath Interconnect accesses (that is, accesses that happen when Intel QuickPath Interconnect quiescence is not established) to the FED4_0xxx region are converted by IOH before forwarding to legacy ESI port. All outbound Intel QuickPath Interconnect accesses (that is, accesses that happen after Intel QuickPath Interconnect quiescence has been established) to FED4_0xxx range are aborted by non-IOH. Also IOH aborts all locked Intel QuickPath Interconnect accesses to the FED4_0xxx range. Other outbound Intel QuickPath Interconnect accesses in the FEDx_xxxx range, but outside of the FED4_0xxx range are forwarded to legacy ESI port by virtue of subtractive decoding.

7.1.4.8 Local XAPIC

Address Region	From	To
Local XAPIC	FEE0_0000	FEEF_FFFF

The CPU Interrupt address space is used to deliver interrupts to the CPU(s). MSI from PCIe devices target this address and are forwarded as SpcInt messages to the CPU. Refer to Chapter 8, "Interrupts" for details of interrupt routing.

The CPUs may also use this region to send inter-processor interrupts (IPI) from one processor to another. The IOH is never a recipient of such an interrupt. Inbound reads to this address are considered errors and are completed with an unsupported request response by the IOH. Outbound accesses to this address are also considered as errors. However, the IOH does not explicitly check for this error condition but simply forwards the transaction subtractively to its subtractive decode port, if one exists downstream.

7.1.4.9 Firmware

Address Region	From	To
HIGHBIO	FF00_0000	FFFF_FFFF

This ranges starts at FF00_0000 and ends at FFFF_FFFF. It is used for BIOS/Firmware. Outbound accesses within this range are forwarded to the firmware hub devices. During boot initialization, IOH with firmware connected south of it will communicate this on all Intel QuickPath Interconnect ports so that CPU hardware can configure the path to firmware. The IOH does not support accesses to this address range inbound that is, those inbound transactions are aborted and a completer abort response is sent back.

7.1.5 Address Regions above 4 GB

7.1.5.1 Memory Mapped I/O High (MMIOH)

Address Region	From	To
MMIOH	GMMIOH.Base	GMMIOH.Limit

The high memory mapped I/O range is located above main memory. This region is used to map I/O address requirements above the 4 GB range. IOH in the system is allocated a portion of this system address region and within that portion, each PCI Express port use up a sub-range.

Each IOH has MMIOH address range registers (LMMIOH and GMMIOH) to support local and remote peer-to-peer in the MMIOH address range. Refer to Section 7.5.1, "Outbound Address Decoding" and Section 7.5.2, "Inbound Address Decoding" for details of inbound and outbound decoding for accesses to this region.

7.1.5.2 High System Memory

Address Region	From	To
High System Memory	4 GB	TOHM

This region is used to describe the address range of system memory above the 4 GB boundary. The IOH forwards all inbound accesses to this region to system memory (unless the requested addresses are also marked as protected. See Chapter 21, "Configuration Register Space"). A portion of the address range within this high system DRAM region could be marked non-coherent (via NcMem.Base/NcMem.Limit register) and the IOH treats them as non-coherent. All other addresses are treated as coherent (unless modified via the NS attributes on PCI Express). The IOH should not receive outbound accesses to this region. However, the IOH does not explicitly check for this error condition but rather subtractively forwards these accesses to the subtractive decode port of the IOH, if one exists downstream (else, error).

Software must set up this address range such that any recovered DRAM hole from below the 4 GB boundary, that might encompass a protected sub-region, is not included in the range.

7.1.5.3 Privileged CSR Memory Space

Address Region	From	To
Privileged CSR	TOCM-64 GB (variable)	TOCM

This region is used to block inbound access to processor CSRs. This region is located at the top of the Intel QuickPath Interconnect physical memory (TOCM) space which can be either 2^51, 2^46 or 2^41, depending on the Intel QuickPath Interconnect profile. This range is above the IOH's TOHM register and should not overlap with the MMIOH range; therefore, IOH should not positively decode this range and will abort any inbound accesses. IOH should not see any outbound accesses to this range. Refer to Section 7.5.1.2, "FWH Decoding" for more details of IOH decoding of this privileged CSR region.

7.1.5.4 BIOS Notes on Address Allocation Above 4 GB

Since the IOH supports only a single, contiguous address range for accesses to system memory above 4 G, BIOS must make sure that there is enough reserved space gap left between the top of high memory (TOHM) and the bottom of the MMIOH region, if memory hot add is required. This gap can be used to address hot added memory in the system and would fit the constraints imposed by IOH decode mechanism.

7.1.6 Protected System DRAM Regions

The IOH supports an address range for protecting various system DRAM regions that carry protected OS code or other proprietary platform information. The ranges are

- Intel VT-d protected high range
- Intel VT-d protected low range
- Intel Itanium processor 9300 series protected DRAM range/McSeg for Intel Xeon processors

The Intel VT-d protected ranges protect default page tables set up by Intel VT-d aware OS. There is one of these ranges for above and below 4G. These ranges can be disabled. Note that when these ranges are enabled, IOH protects these addresses regardless of whether translation is enabled or not. When translation is enabled, these ranges are specified in the HPA domain.

The IOH provides a 64-bit programmable address window for this purpose. All accesses that hit this address range are completer aborted by the IOH. This address range can be placed anywhere in the system address map and could potentially overlap one of the coarse DRAM decode ranges.

7.2 I/O Address Space

There are four classes of I/O addresses that are specifically decoded by the IOH:

1. I/O addresses used for VGA controllers.
2. I/O addresses used for ISA aliasing
3. I/O addresses used for the PCI Configuration protocol – CFC/CF8
4. I/O addresses used by downstream PCI/PCIe I/O devices, typically legacy devices. The range can be divided by various downstream ports in the IOH. Each downstream port in the IOH contains a BAR to decode its I/O range. Addresses that fall within this range are forwarded to its respective IOH, then subsequently to the downstream port.

7.2.1 VGA I/O Addresses

Legacy VGA device uses up the addresses 3B0h-3BBh, 3C0h-3DFh. Any PCI Express or ESI port in the IOH can be a valid target of these address ranges if the VGAEN bit in the peer-to-peer bridge control register corresponding to that port is set (besides the condition where these regions are positively decoded within the peer-to-peer I/O address range). In the outbound direction, by default, the IOH decodes only the bottom 10 bits of the 16 bit I/O address when decoding this VGA address range with the VGAEN bit set in the peer-to-peer bridge control register. When the VGA16DECEN bit is set in addition to VGAEN being set, the IOH performs a full 16 bit decode for that port when decoding the VGA address range outbound. In general, on outbound accesses to this space, IOH positively decodes the address ranges of all PCIe ports per the peer-to-peer bridge decoding rules (refer to the *PCI-PCI Bridge 1.2 Specification* for details). When no target is positively identified, the IOH sends it to its subtractive decode port, if one exists. Else, error. For inbound accesses to the VGA address range, IOH always performs full 16 bit I/O decode.

7.2.2 ISA Addresses

The IOH supports ISA addressing per the *PCI-PCI Bridge 1.2 Specification*. ISA addressing is enabled for a PCI Express port via the Bridge Control Register (BCR). Note that when the VGA Enable bit is set for a PCI Express port without the VGA 16-bit Decode Enable bit being set, the ISA Enable bit must be set in all the peer PCI Express ports in the *system*.

7.2.3 CFC/CF8 Addresses

The CFC/CF8 addresses are used by legacy operating systems to generate PCI configuration cycles. The IOH does not explicitly decode the CFC/CF8 I/O addresses or take any specific action. These accesses are decoded as part of the normal inbound and outbound I/O transaction flow, and follow the same routing rules. Refer also to Table 7-3 and Table 7-4 for details of I/O address decoding.

7.2.4 PCI Express Device I/O Addresses

These addresses could be anywhere in the 64 KB I/O space and are used to allocate I/O addresses to PCI Express devices. Each IOH is allocated a chunk of I/O address space; there are IOH-specific requirements on how these chunks are distributed to support peer-to-peer. Each IOH has I/O address range registers (LIO and GIO) to support local peer-to-peer in the I/O address range. Refer to Section 7.5.1 and Section 7.5.2 for details.

7.3 Configuration/CSR Space

There are two types of configuration/CSR space in the IOH: PCI Express configuration space and Intel QuickPath Interconnect CSR space. PCI Express configuration space is the standard PCI Express configuration space defined in the PCI Express specification. CSR space is memory mapped space used exclusively for special processor registers.

7.3.1 PCI Express Configuration Space

PCI Express configuration space allows for up to 256 buses, 32 devices per bus and 8 functions per device. There could be multiple groups of these configuration spaces and each is called a *segment*. The IOH can support multiple segments in a system. PCI Express devices are accessed via NcCfgWr/Rd transactions on Intel QuickPath Interconnect. Within each segment, bus 0 is always assigned to the internal bus number of the IOH which has the legacy ICH attached to it. Refer to Section 7.5.1 and Section 7.5.2 for details.

Each IOH is allocated a chunk of PCIe bus numbers and there are IOH-specific requirements on how these chunks are distributed amongst IOHs to support peer-to-peer. Refer to Section 7.6, “Intel VT-d Address Map Implications” for details of these restrictions. Each IOH has a set of configuration bus range registers (LCFGBUS and GCFGBUS) to support local and remote peer-to-peer. Refer to Section 7.5.1, “Outbound Address Decoding” and Section 7.5.2, “Inbound Address Decoding” for details of how these registers are used in the inbound and outbound memory/configuration/message decoding.

7.3.2 Processor CSR Space

The processor CSR space is different from the PCI Express configuration space and is accessed via the NcWrPtl and NcRd transactions on Intel QuickPath Interconnect. These regions are fixed in memory space between FC00_0000 to FDFF_FFFF.

The IOH allocates all its Intel QuickPath Interconnect and core registers to this space. Refer to Section 7.5.1.2 for details.

7.4 IOH Address Map Notes

7.4.1 Memory Recovery

When software recovers an underlying DRAM memory region that resides below the 4 GB address line that is used for system resources like firmware, localAPIC, and IOAPIC, and so on (the gap below 4 GB address line), it needs to make sure that it does not create system memory holes whereby all the system memory cannot be decoded with two contiguous ranges. It is OK to have unpopulated addresses within these contiguous ranges that are not claimed by any system resource. IOH decodes all

inbound accesses to system memory via two contiguous address ranges (0-TOLM, 4 GB-TOHM) and there cannot be holes created inside of those ranges that are allocated to other system resources in the gap below 4 GB address line. The only exception to this is the hole created in the low system DRAM memory range via the VGA memory address. IOH comprehends this and does not forward these VGA memory regions to system memory.

7.4.2 Non-Coherent Address Space

The IOH supports one coarse main memory range which can be treated as non-coherent by the IOH, that is, inbound accesses to this region are treated as non-coherent. This address range has to be a subset of one of the coarse memory ranges that the IOH decodes towards system memory. Inbound accesses to the NC range are not snooped on Intel QuickPath Interconnect.

7.5 IOH Address Decoding

In general, software needs to guarantee that for a given address there can only be a single target in the system. Otherwise, results are undefined. The one exception is that VGA addresses would fall within the inbound coarse decode memory range. The IOH inbound address decoder forwards VGA addresses to the VGA port in the system only (and not system memory).

7.5.1 Outbound Address Decoding

This section covers address decoding that IOH performs on a transaction from Intel QuickPath Interconnect targets one of the downstream ports of the IOH. For the remainder of this section, the term PCI Express generically refers to all I/O ports: standard PCI Express, or ESI, unless noted otherwise.

7.5.1.1 General Overview

- Before any transaction from Intel QuickPath Interconnect is validly decoded by IOH, the NodeID in the incoming transaction must match the NodeIDs assigned to the IOH; otherwise, it is an error.
- All target decoding towards PCI Express, firmware, and internal IOH devices, follow address-based routing. Address-based routing follows the standard PCI tree hierarchy routing.
- NodeID based routing is not supported south of the Intel QuickPath Interconnect port in the IOH, except in MP Route-Through mode (when the local NodeID is not matched from the Intel QuickPath Interconnect port, the transaction is routed to the other Intel QuickPath Interconnect port).
- The subtractive decode port in an IOH is the port that is a) the recipient of all addresses that are not positively decoded towards any of the valid targets in the IOH and b) the recipient of all message/special cycles that are targeted at the legacy ICH.
  - This can be the ESI or the Intel QuickPath Interconnect port. SUBDECEN bit in the IOH Miscellaneous Control Register (IOHMISCCTRL) sets the subtractive port of the IOH. This bit is set by the LEGACYIOH strap.
  - Virtual peer-to-peer bridge decoding related registers with their associated control bits (for example, VGAEN bit) and other miscellaneous address ranges (I/OxAPIC) of a ESI port are NOT valid (and ignored by the IOH decoder) when they are set as the subtractive decoding port.

- Unless specified otherwise, all addresses (no distinction made) are first positively decoded against all target address ranges. Valid targets are PCI Express, ESI, CB DMA and I/OxAPIC devices. A PCI Express or ESI port are invalid targets for positive decode of Memory/IO/Configuration/Message cycles, if the subtractive decoding has been enabled for that port. Besides the standard peer-to-peer decode ranges for PCI Express ports (refer to the *PCI-PCI Bridge 1.2 Specification* for details), the target addresses for these ports also include the I/OxAPIC address ranges. Software has the responsibility to make sure that only one target can ultimately be the target of a given address and IOH will forward the transaction towards that target.
  - For outbound transactions, when no target is positively decoded, the transactions are sent to the downstream ESI port if it is indicated as the subtractive decode port. If ESI port is not the subtractive decode port, the transaction is master aborted.
  - For inbound transactions, when no target is positively decoded, the transactions are sent to the subtractive decode port which is either Intel QuickPath Interconnect or ESI port.
- For positive decoding, the memory decode to each PCI Express target is governed by Memory Space Enable (MSE) bit in the device PCI configuration space and I/O decode is covered by the I/O Space Enable bit in the device PCI configuration space. The exceptions to this rule are the per port (external) I/OxAPIC address range and the internal I/OxAPIC ABAR address range which are decoded irrespective of the setting of the memory space enable bit. There is no decode enable bit for configuration cycle decoding towards either a PCI Express port or the internal configuration space of the IOH.
- The target decoding for internal VTdCSR space is based on whether the incoming CSR address is within the VTdCSR range.
- Each PCI Express/ESI port in the IOH has one special address range – I/OxAPIC.
- No loopback supported; that is, a transaction originating from a port is never sent back to the same port and the decode ranges of originating port are ignored in address decode calculations.

7.5.1.2 FWH Decoding

This section describes access to flash memory that is resident below the IOH.

7.5.1.2.1 Overview

- FWH accesses are allowed only from Intel QuickPath Interconnect. Accesses from JTAG, SMBus, and PCI Express are not permitted.
- The IOH does not allow boot from an ICH FWH that is not the legacy ICH FWH.
- The IOH indicates presence of bootable FWH to CPU if it is the IOH with a FWH that contains the boot code below the legacy ICH connected to it.
- All FWH addresses (4 GB:4 GB-16 MB) and 1 MB:1 MB-128K that do not positively decode to the IOH's PCI Express ports, are subtractively forwarded to its legacy decode port, if one exists (else, error).
- When the IOH receives a transaction from an Intel QuickPath Interconnect port within 4 GB:4 GB-16 MB or 1 MB:1 MB-128 K and there is no positive decode hit against any of the other valid targets (if there is a positive decode hit to any of the other valid targets, the transaction is sent to that target), then the transaction is forwarded to ESI if it is the subtractive decode port; otherwise it is aborted.

7.5.1.3 I/OxAPIC Decoding

I/OxAPIC accesses are allowed only from the Intel QuickPath Interconnect ports. The IOH provides an I/OxAPIC base/limit register per PCI Express port for decoding to I/OxAPIC in downstream components such as the PXH. The IOH's integrated I/OxAPIC decodes two separate base address registers, both targeting the same I/OxAPIC memory mapped registers. Decoding flow for transactions targeting I/OxAPIC addresses is the same as for any other memory-mapped I/O registers on PCI Express.

7.5.1.4 Other Outbound Target Decoding

Other address ranges that need to be decoded for each PCI Express and ESI port include the standard peer-to-peer bridge decode ranges (MMIOL, MMIOH, I/O, VGA config). Refer to *PCI-PCI Bridge 1.2 Specification* and *PCI Express Base Specification,* Revision 2.0 for details.

7.5.1.5 Summary of Outbound Target Decoder Entries

Table 7-1, "Outbound Target Decoder Entries" provides a list of all the target decoder entries required by the outbound target decoder to positively decode towards a target.

Table 7-1. Outbound Target Decoder Entries

Address Region	Target Decoder Entry	Comments
VGA (A0000-BFFFF)	10[1]	Fixed
MMIOL	10	Variable. From P2P Bridge Configuration Register Space
I/OxAPIC	10	Variable. From P2P Bridge Configuration Register Space
MMIOH	10	Variable. From P2P Bridge Configuration Register Space
CFGBUS	1	IOH internal bus is fixed as bus 0
	11	Variable. From P2P Bridge Configuration Register Space for PCIe bus number decode.
VTBAR	1	Variable: Decodes the Intel VT-d chipset registers.
ABAR	1	Variable. Decodes the sub-region within FEC address range for the integrated I/OxAPIC in IOH.
MBAR	1	Variable. Decodes any 32-bit base address for the integrated I/OxAPIC in IOH.
IO	11	Variable. From P2P Bridge Configuration Register Space of the PCIe port.

Notes:

1. This is listed as 10 entries because each of the 10 P2P bridges have their own VGA decode enable bit and IOH has to comprehend this bit individually for each port.

7.5.1.6 Summary of Outbound Memory/IO decoding

Throughout the tables in this section, a reference to a PCIe port generically refers to a standard PCIe port or an ESI port.

Table 7-2. Decoding of Outbound Memory Requests from Intel QuickPath Interconnect (from CPU or Remote Peer-to-Peer)

Address Range	Conditions	IOH Behavior
I/OxAPIC BAR, ABAR, VTBAR	ABAR, MBAR, VTBAR and remote p2p access	Completer Abort
	ABAR, MBAR, VTBAR and not remote p2p access	Forward to that target
All memory accesses	(ABAR, MBAR) and one of the downstream ports positively claimed the address	Forward to that port
	(ABAR, MBAR) and none of the downstream ports positively claimed the address and ESI is the subtractive decode port	Forward to ESI
	(ABAR, MBAR) and none of the downstream ports positively claimed the address and ESI is not the subtractive decode port	Master Abort

Table 7-3, "Subtractive Decoding of Outbound I/O Requests from Common System Interface" details IOH behavior when no target has been positively decoded for an incoming I/O transaction from Intel QuickPath Interconnect.

Table 7-3. Subtractive Decoding of Outbound I/O Requests from Common System Interface

Address Range	Conditions	IOH Behavior
Any I/O address not positively decoded	No valid target decoded and one of the downstream ports is the subtractive decode port	Forward to downstream subtractive decode port
	No valid target decoded and none of the downstream ports is the subtractive decode port	Master Abort

7.5.2 Inbound Address Decoding

This section covers the decoding that is done on any transaction that is received on a PCI Express or ESI port

7.5.2.1 Overview

- All inbound addresses that fall above the top of Intel QuickPath Interconnect physical address limit are flagged as errors by the IOH.
- Inbound decoding towards main memory happens in two steps. The first step involves a 'coarse decode' towards main memory using two separate system memory window ranges (0-TOLM, 4 GB-TOHM) that can be setup by software. These ranges are non-overlapping. The second step is the fine source decode towards an individual processor socket using the Intel QuickPath Interconnect memory source address decoders.
  - A sub-region within one of the two coarse regions can be marked as non-coherent.
  - VGA memory address would overlap one of the two main memory ranges and the IOH decodes and forwards these addresses to the VGA device of the system.
- Inbound peer-to-peer decoding also happens in two steps. The first step involves decoding peer-to-peer crossing Intel QuickPath Interconnect (remote peer-to-peer) and peer-to-peer not crossing Intel QuickPath Interconnect (local peer-to-peer). The second step involves actual target decoding for local peer-to-peer (if transaction targets another device downstream from the IOH) and also involves

source decoding using Intel QuickPath Interconnect source address decoders for remote peer-to-peer.

— A pair of base/limit registers are provided to positively decode local peer-to-peer transactions. Another pair of base/limit registers are provided that covers the global peer-to-peer address range (that is, peer-to-peer address range of the entire system). Any inbound address that falls outside of the local peer-to-peer address range but that falls within the global peer-to-peer address range is considered as a remote peer-to-peer address.

— Fixed VGA memory addresses (A0000-BFFFF) are always peer-to-peer addresses and would reside outside of the global peer-to-peer memory address ranges mentioned above.

— Subtractively decoded inbound addresses are forwarded to the subtractive decode port of the IOH.

Figure 7-3. Peer-to-Peer Illustration

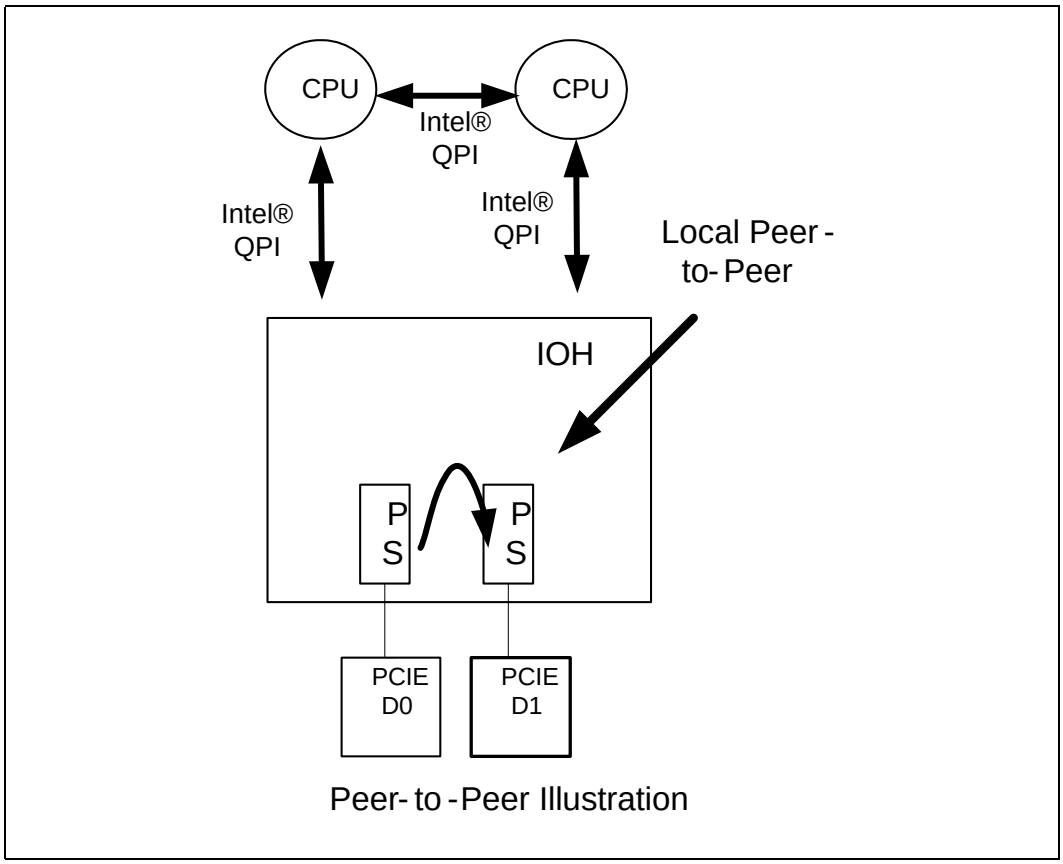

7.5.2.2 Summary of Inbound Address Decoding

Table 7-4 summarizes IOH behavior on inbound memory transactions from any PCI Express port. Note that this table is only intended to show the routing of transactions based on the address and is not intended to show the details of several control bits that govern forwarding of memory requests from a given PCI Express port. Refer to the *PCI Express Base Specification,* Revision 2.0 and the registers chapter for details of these control bits.

Table 7-4. Inbound Memory Address Decoding

Address Range	Conditions	IOH Behavior
DRAM	Address within 0:TOLM or 4GB:TOHM	Forward to Intel® QuickPath Interconnect port
Interrupts	Address within FEE00000-FEEFFFFF and write	Forward to Intel® QuickPath Interconnect port
	Address within FEE00000-FEEFFFFF and Read	Completer Abort
I/OxAPIC, CPUCSR, CPULocalCSR, privileged CSR,INTA/Rsvd, TSeg, Relocated CSeg, On-die ROM, FWH, VTBAR[1] (when enabled), Protected VT-d range Low and High, Generic Protected dram range and I/OxAPIC BARs[2]	FC00000-FEDFFFFF or FEF00000-FFFFFFFF TOCM >= Address >= TOCM-64GB VTBAR VT-d_Prot_High VT-d_Prot_Low Generic_Prot_DRAM I/OxAPIC MBAR	Completer Abort
VGA	Address within 0A0000h-0BFFFFh and main switch SAD is programmed to forward VGA	Forward to Intel® QuickPath Interconnect port
	Address within 0A0000h-0BFFFFh and main switch SAD is NOT programmed to forward VGA and one of the PCIe has VGAEN bit set	Forward to the PCIe port
	Address within 0A0000h-0BFFFFh and main switch SAD is NOT programmed to forward VGA and none of the PCIe has VGAEN bit set and ESI port is the subtractive decoding port	Forward to ESI port
	Address within 0A0000h-0BFFFFh and main switch SAD is NOT programmed to forward VGA and none of the PCIe ports have VGAEN bit set and ESI is not the subtractive decode por	Forward to legacy IOH via Intel QuickPath using enabled SUBSAD; Master abort if SUBSAD is not enabled.
Other Peer-to-peer	Address within LMMIOL.BASE/LMMIOL.LIMIT or LMMIOH.BASE/LMMIOH.LIMIT and a PCIe port decoded as target	Forward to the PCI Express port
	Address within LMMIOL.BASE/LMMIOL.LIMIT or LMMIOH.BASE/LMMIOH.LIMIT and no PCIe port positively decoded as target ESI is the subtractive decoding port	Forward to ESI
	Address within LMMIOL.BASE/LMMIOL.LIMIT or LMMIOH.BASE/LMMIOH.LIMIT and no PCIe port decoded as target and ESI is not the subtractive decoding port	Master Abort
	Address NOT within LMMIOL.BASE/LMMIOL.LIMIT or LMMIOH.BASE/LIOH.LIMIT, but is within GMMIOL.BASE/GMMIOL.LIMIT or GMMIOH.BASE/ GMMIOH.LIMIT	Forward to Intel QuickPath Interconnect
DRAM Memory holes and other non-existent regions	• {4G <= Address <= TOHM (OR) 0 <= Address <= TOLM} AND address does not decode to any socket in Intel QuickPath Interconnect source decoder • Address > TOCM	Master Abort
All Else		Forward to subtractive decode port, if enabled via CSRMISCCTRL[1], else Master Abort

Notes:

1. Note that VTBAR range would be within the MMIOL range of that IOH. And by that token, VTBAR range can never overlap with any dram ranges.
2. The I/OxAPIC MBAR regions of an IOH overlap with MMIOL/MMIOH ranges of that IOH.

Table 7-5 summarizes IOH behavior on inbound memory transactions from any PCI Express port.

Table 7-5. Inbound I/O Address Decoding

Address Range	Conditions	IOH Behavior
Any	After disabling Inbound I/O[1]	Master Abort
VGA	Address within 3B0h-3BBh, 3C0h-3DFh, inbound I/O is enabled and RVGAEN is set	Forward to Intel QuickPath Interconnect
	Address within 3B0h-3BBh, 3C0h-3DFh, inbound I/O is enabled and RVGAEN is NOT set and one of the PCIe has VGAEN bit set	Forward to that PCIe port
	Address within 3B0h-3BBh, 3C0h-3DFh, inbound I/O is enabled and RVGAEN is NOT set and none of the PCIe has VGAEN bit set but IS within the I/O base/limit range of one of the PCIe ports	Forward to that PCIe port
	Address within 3B0h-3BBh, 3C0h-3DFh, inbound I/O is enabled and RVGAEN is NOT set and none of the PCIe has VGAEN bit set and is NOT within the I/O base/limit range of any PCIe ports and ESI port is the subtractive decode port	Forward to ESI port
	Address within 03B0h-3BBh, 3C0h-3DFh, inbound I/O is enabled and RVGAEN is NOT set, none of the PCIe has VGAEN bit set and is NOT within base/limit range of any PCIe port, and ESI is not the subtractive decode port	Master abort
Other Peer-to-peer	Address within LIO.BASE/LIO.LIMIT, inbound I/O is enabled and a PCIe port positively decoded as target	Forward to the PCI Express port
	Address within LIO.BASE/LIO.LIMIT, inbound I/O is enabled and no PCIe port positively decoded as target and ESI is the subtractive decode port	Forward to ESI
	Address within LIO.BASE/LIO.LIMIT, inbound I/O is enabled and no PCIe port decoded as target and ESI is NOT the subtractive decode port	Master Abort
	Inbound I/O is enabled and address NOT within LIO.BASE/LIO.LIMIT, inbound I/O is enabled but is within GIO.BASE/GIO.LIMIT	Forward to the Intel® QuickPath Interconnect
Non-existent Addresses	Address => 64 KB	Master Abort
All Else		Forward to subtractive decode port, if enabled via CSRMISCCTRL[1], else Master Abort

Notes:

1. Inbound I/O is enabled or disabled via CSRMISCCTRLSTS[30].

7.6 Intel VT-d Address Map Implications

Intel VT-d applies only to inbound memory transactions. Inbound I/O and configuration transactions are not affected by Intel VT-d. Inbound I/O, configuration and message decode and forwarding happens the same whether Intel VT-d is enabled or not. For memory transaction decode, the host address map in Intel VT-d corresponds to the address map discussed earlier in the chapter and all addresses after translation are subject to the same address map rule checking (and error reporting) as in the non Intel VT-d mode. There is not a fixed guest address map that IOH Intel VT-d hardware can rely upon (except that the guest domain addresses cannot go beyond the guest address width specified via the GPA_LIMIT register) that is, it is OS dependent. IOH converts all incoming memory guest addresses to host addresses and then applies the same set of memory address decoding rules as described earlier. In addition to the address map and decoding rules discussed earlier, IOH also supports an additional memory range called the VTBAR range and this range is used to handle accesses to Intel VT-d related chipset registers. Only aligned DWORD/QWORD accesses are allowed to this region. Only outbound and SMBus/JTAG accesses are allowed to this range and also these can only be accesses outbound from Intel QuickPath Interconnect. *Inbound accesses to this address range are completer aborted by the IOH.*

§

8 Interrupts

8.1 Overview

The IOH supports both MSI and legacy PCI interrupts from its PCI Express ports. MSI interrupts received from PCI Express are forwarded directly to the processor socket. Legacy interrupt messages received from PCI Express are either converted to MSI interrupts via the integrated I/OxAPIC in the IOH or forwarded to the ESI. When the legacy interrupts are forwarded to ESI, the compatibility bridge either converts the legacy interrupts to MSI writes via its integrated I/OxAPIC or handles them via the legacy 8259 controller. All root port interrupt sources within the IOH (that is, Error and Power management) support MSI mode interrupt delivery. Where noted, these interrupt sources (except the error source) also support the ACPI-based mechanism (via GPE messages) for system driver notification. The IOH does not the support legacy PCI INTx mechanism for internal sources of interrupt. In addition to MSI and ACPI messages, the IOH also supports generation of SMI/PMI/MCA/NMI interrupts directly from the IOH to the processor (bypassing ICH), in support of IOH error reporting. For Intel QuickPath Interconnect-defined legacy virtual message Virtual Legacy Wires (VLW) signaling, the IOH provides a sideband interface to the legacy bridge and an inband interface on Intel QuickPath Interconnect. The IOH logic handles conversion between the two.

8.2 Legacy PCI Interrupt Handling

On PCI Express, interrupts are represented with either MSI or inbound interrupt messages (Assert_INTx/Deassert_INTx). The integrated I/OxAPIC in the IOH converts the legacy interrupt messages received from PCI Express into MSI interrupts. If the I/OxAPIC is disabled (via the mask bits in the I/OxAPIC table entries), the messages are routed to the legacy ICH. The subsequent paragraphs describe how the IOH handles the INTx message flow, from its PCI Express ports and internal devices.

The IOH tracks the assert/deassert messages for the four interrupts INTA, INTB, INTC, and INTD from each PCI Express port and INTx for CB DMA and ME (Intel Xeon processor 7500 series-based platform only). Each of these interrupts from each PCI Express root port is routed to a specific I/OxAPIC table entry (see Table 8-2 for the mapping) in that IOH. If the I/OxAPIC entry is masked (via the 'mask' bit in the corresponding Redirection Table Entry), then the corresponding PCI Express interrupt(s) is forwarded to the legacy ICH, provided the 'Disable PCI INTx Routing to ICH' bit is clear, Section 21.11.2.28, "QPIPINTRC: Intel QuickPath Interconnect Protocol Interrupt Control" .

There is a 1:1 correspondence between message type received from PCI Express and the message type forwarded to the legacy ICH. For example, if the PCI Express Port 0 INTA message is masked in the integrated I/OxAPIC, it is forwarded to the legacy ICH as INTA message (if the 'Disable Interrupt Routing to ICH' bit is cleared). Each IOH combines legacy interrupts (to be forwarded to the legacy ICH) from all PCI Express ports and CB DMA (Intel Xeon processor 7500 series based platform only) and presents a consolidated set of four virtual wire messages. If the I/OxAPIC entry is unmasked, an MSI interrupt message is generated on the Intel QuickPath Interconnect.

The IOH does not provide a capability to route inband PCI INTx virtual wire messages to any component other than the legacy ICH.

When a standard downstream PCI Express root port receives an Assert_INTx message, subsequent Assert_INTx messages of the same type (A/B/C/D) will simply keep the virtual wire asserted until the associated Deassert message is received. The first Deassert message received for a given interrupt type will deassert the internal virtual wire of the root port for the interrupt type. Also the internal virtual wire of the root port is de-asserted automatically in hardware if the link goes down when the internal virtual wire is asserted. Deassert messages received for a given interrupt when no corresponding Assert message was received previously for that interrupt, or Deassert messages received when no virtual wire for that interrupt is asserted, will be discarded with no side effect. On an Intel QuickPath Interconnect link port, the IOH can receive multiple Assert_INTx messages of the same type before it receives any Deassert_INTx message of that type. In normal operation, it is always guaranteed that the IOH will receive a Deassert_INTA message for every Assert_INTA message it receives from the Intel QuickPath Interconnect.

For consolidating interrupts from the PCI Express/ESI ports in non-legacy IOHs, the consolidated set of interrupt messages are routed to the Intel QuickPath Interconnect instead.

8.2.1 Summary of PCI Express INTx Message Routing

An IOH is not always guaranteed to have its ESI port enabled for legacy. When an IOH's ESI port is disabled, it has to route the INTx messages it receives from its downstream PCI Express ports to its the Intel QuickPath Interconnect interface, provided they are not serviced via the integrated I/OxAPIC.

Figure 8-1 illustrates how legacy interrupt messages are routed to the legacy ICH.

Figure 8-1. Legacy Interrupt Routing Illustration (INTA Example)

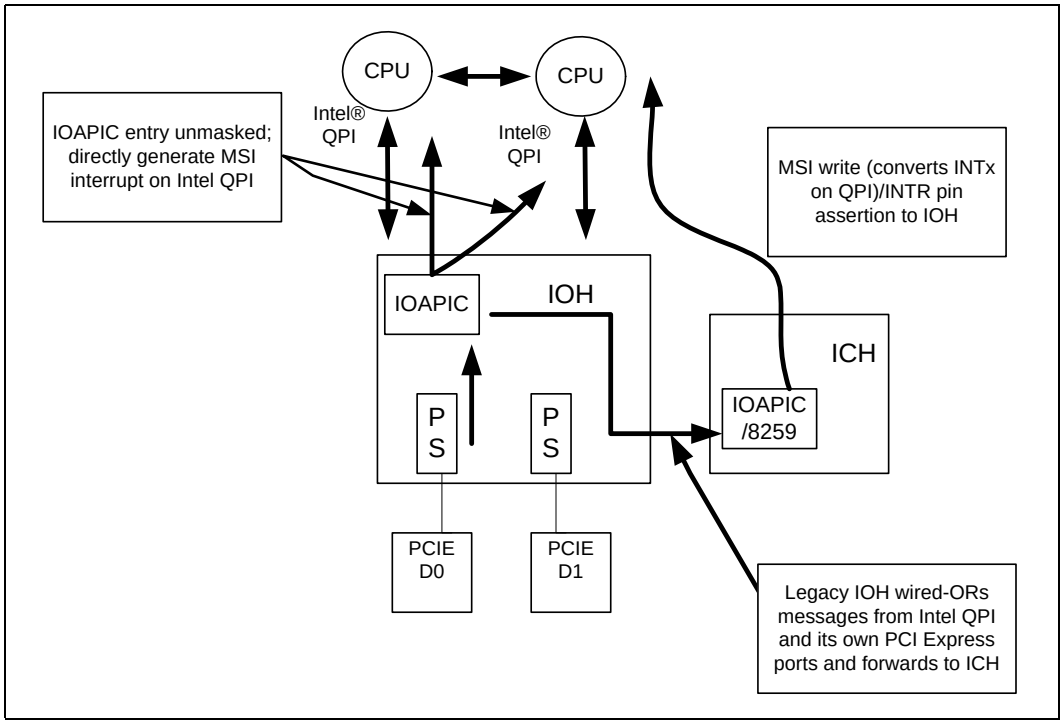

8.2.2 Integrated I/OxAPIC

The integrated I/OxAPIC converts legacy PCI Express interrupt messages into MSI interrupts. The I/OxAPIC appears as a PCI Express endpoint device in the IOH configuration space. The I/OxAPIC provides 24 unique MSI interrupts. This table is programmed via the MBAR memory region or ABAR memory region (Refer to Chapter 21).

In Dual IOH Proxy mode, the local IOH uses the Dual NonLegacyIOH ABAR range as defined by "DUAL.NL.ABAR.BASE: Dual NonLegacyIOH ABAR Range Base" and"DUAL.NL.ABAR.LIMIT: Dual NonLegacyIOH ABAR Range Limit" to send transaction targeting at non-legacy IOH's integrated IOAPIC controller to the non-legacy IOH.

These registers in both legacy and non-legacy IOH need to be programmed with the range claimed by the non-legacy IOH.

In the non-Legacy IOH with 11 PCI Express ports (instead of ESI in the legacy IOH), there are potentially 53 unique legacy interrupts possible, 11 PCIe ports * 4 (sources #1 - #11) + 4 for CB DMA (source #12) + 4 for ME (sources #13 - #16) + 1 IOH RootPorts/core (source #17) as shown in Table 8-1, "Interrupt Sources in I/OxAPIC Table Mapping", and these are mapped to the 24 entries in the I/OxAPIC as shown in Table 8-2, "I/OxAPIC Table Mapping to PCI Express Interrupts".

In the legacy IOH, there are 49 unique legacy interrupts possible which are mapped to the 24 entries in the I/OxAPIC, as shown in Table 8-2. The distribution is based on guaranteeing that there is at least one unshared interrupt line (INTA) for each possible source of interrupt. When a legacy interrupt asserts, an MSI interrupt is generated (if the corresponding I/OxAPIC entry is unmasked) based on the information programmed in the corresponding I/OxAPIC table entry.

Table 8-1. Interrupt Sources in I/OxAPIC Table Mapping

Interrupt Source #	PCI Express Port/Device	INT[A-D] Used / Comment
1	PCIe port 3	A,B,C,D / x16, x8, x4
2	PCIe port 4	A,B,C,D / x4
3	PCIe port 5	A,B,C,D / x8, x4
4	PCIe port 6	A,B,C,D / x4
5	PCIe port 1	A,B,C,D / x4, x2
6	PCIe port 2	A,B,C,D / x2
7	PCIe port 7	A,B,C,D / x16, x8, x4
8	PCIe port 8	A,B,C,D / x4
9	PCIe port 9	A,B,C,D / x8, x4
10	PCIe port 10	A,B,C,D / x4
11	PCIe port 11 (ESI used as PCIe in non-legacy IOH)	A,B,C,D / x4
12	CB3 DMA	A,B,C,D
13	Intel ME HECI	A
14	Intel ME HECI2	D
15	Intel ME IDEr	C
16	Intel ME KT	B
17	Root Ports/Core	A

Table 8-2. I/OxAPIC Table Mapping to PCI Express Interrupts[1]

I/OxAPIC Table Entry#	PCI Express Port/CB DMA Device#	PCI Express Virtual Wire Type
0	1	INTA
1	2, <14>. 3	INTA, <INTA>, [INTB]
2	3, <15>	INTA, <INTC>
3	4, <16>, {3}	INTA, <INTB>, {INTC]
4	5	INTA
5	6, <17>, [3]	INTA, <INTA>, [INTD]
6	7	INTA
7	8, <10>	INTA, <INTB>
8	9	INTA
9	10	INTA
10	1, <2>, [3]	INTB, <INTD>, [INTC]
11	1, <2>, [3]	INTC, <INTB>, [INTD]
12	1, <2>, [3]	INTD, <INTC>, [INTB]
13	7, <8>, [4]	INTB, <INTD>, [INTC]
14	7, <8>, [4]	INTD, <INTC>, [INTB]
15	7, <8>, [4]	INTC, <INTB>, [INTD]
16	5, <10>, [6], {9}	INTB, <INTD>, [INTC], {INTC}
17	5, <10>, [6], {9}	INTC, <INTB>, [INTB], {INTD}
18	5, <10>, [6], {9}	INTD, <INTC>, [INTD], {INTB}
19	12	INTA
20	12	INTB
21	12, <15>, [17], {10}	INTC, <INTC>, [INTA], {INTD}
22	12, <14>, [16], {10}	INTD, <INTA >, [INTB], {INTC}
23	13, <5>, [9], {6}	INTA, <INTD>, [INTC], {INTB}

Notes:

1. < >, [ ], and { } associate interrupt from a given device number (as shown in the 'PCI Express Port/CB DMA Device#' column) that is marked thus to the corresponding interrupt wire type (shown in this column) also marked such. For example, I/OxAPIC entry 12 corresponds to the wired-OR of INTD message from source #1 (PCIe port #3), INTC message from source #2 (PCIe port #4), and INTB message from source #3 (PCIe port #5).

Table 8-3. Programmable IOxAPIC Entry Target for Certain Interrupt Sources (Sheet 1 of 2)

Target Table Entries Numbers	Interrupt Source in Table 8-1	INT[A-D]	Default Table Entry (3x8, 3x4)
1, 12	3	INTB	1
3, 10	3	INTC	3
5, 11	3	INTD	5
18, 23	5	INTD	23
17, 23	6	INTB	17
16, 23	9	INTC	23
7, 17	10	INTB	7

Table 8-3. Programmable IOxAPIC Entry Target for Certain Interrupt Sources (Sheet 2 of 2)

Target Table Entries Numbers	Interrupt Source in Table 8-1	INT[A-D]	Default Table Entry (3x8, 3x4)
18, 22	10	INTC	22
16, 21	10	INTD	21
1, 22	14	INTD	22
2, 21	13	INTA	21
3, 22	16	INTB	22
5, 21	17	INTA	21

8.2.2.1 Integrated I/OxAPIC MSI Interrupt Ordering

As with MSI interrupts generated from PCI Express endpoints, MSI interrupts generated from the integrated I/OxAPIC follow the RdC push memory write ordering rule. For example read completions on reads (config or memory) to I/OxAPIC registers must push previously posted MSI writes from the I/OxAPIC.

8.2.2.2 Integrated I/OxAPIC EOI Flow

Each I/OxAPIC entry can be setup by software to treat the interrupt inputs as either level or edge triggered. For level triggered interrupts, the I/OxAPIC generates an interrupt when the interrupt input asserts, and stops generating further interrupts until software clears the RIRR bit in the corresponding redirection table entry with a directed write to the EOI register; or until software generates an EOI message to the I/OxAPIC with the appropriate vector number in the message. When the RIRR bit is cleared, the I/OxAPIC resamples the level interrupt input corresponding to the entry; if it is still asserted, the I/OxAPIC generates a new MSI message.

The EOI message is broadcast to all I/OxAPICs in the system; the integrated I/OxAPIC is also a target for the EOI message. The I/OxAPIC looks at the vector number in the message, and the RIRR bit is cleared in all the I/OxAPIC entries which have a matching vector number.

IOH has capability to NOT broadcast/multicast EOI message to any of the PCI Express/ ESI ports/ integrated IOxAPIC and this is controlled via bit 0 in the EOI_CTRL register. When this bit is set, IOH simply drops the EOI message received from Intel QuickPath Interconnect and not send it to any south agent. But IOH does send a normal cmp for the message on Intel QuickPath Interconnect. This is required in some virtualization usages.

8.2.3 PCI Express INTx Message Ordering

INTx messages on PCI Express are posted transactions and follow the posted ordering rules. For example, if an INTx message is preceded by a memory write A, the INTx message pushes the memory write to a global ordering point before the INTx message is delivered to its destination (which could be the I/OxAPIC, which decides further action). This guarantees that any MSI generated from the integrated I/OxAPIC (or from the I/OxAPIC in ICH, if the integrated I/OxAPIC is disabled) will be ordered behind the memory write A, guaranteeing producer/consumer sanity.

8.2.4 INTR_Ack / INTR_Ack_Reply Messages

INTR_Ack and INTR_Ack_Reply messages on ESI and IntAck on Intel QuickPath Interconnect support legacy 8259-style interrupts required for system boot operations. These messages are routed from the processor socket to the legacy IOH via the IntAck cycle on Intel QuickPath Interconnect. The IntAck transaction issued by the processor socket behaves as an I/O Read cycle in that the Completion for the IntAck message contains the Interrupt vector. The IOH converts this cycle to a posted message on the ESI port (no completions).

- IntAck – The IOH forwards the IntAck received on the Intel QuickPath Interconnect interface (as an NCS transaction) as a posted INTR_Ack message to the legacy ICH over ESI. A completion for IntAck is not sent on Intel QuickPath Interconnect just yet.
- INTR_Ack_Reply – The ICH returns the 8-bit interrupt vector from the 8259 controller through this posted vendor defined message (VDM). The INTR_Ack_Reply message pushes upstream writes through virtual channel (VC0) in both the ICH and the IOH. This IOH then uses the data in the INTR_Ack_Reply message to form the completion for the original IntAck message.

Note: There can be only one outstanding IntAck transaction across all processor sockets in a partition at a given instance.

8.3 MSI

MSI interrupts generated from PCI Express ports or from integrated functions within the IOH are memory writes to a specific address range, 0xFEEx_xxxx. If interrupt remapping is disabled in the IOH, the interrupt write directly provides the information regarding the interrupt destination processor and interrupt vector. The details of these are as shown in Table 8-4 and Table 8-5. If interrupt remapping is enabled in the IOH, interrupt write fields are interpreted as shown in Table 8-6 and Table 8-7.

Note: The term APICID in this chapter refers to the 32-bit field on Intel QuickPath Interconnect interrupt packets, in both the format and meaning.

Table 8-4. MSI Address Format when Remapping is Disabled

Bits	Description
31:20	FEEh
19:12	**Destination ID:** This will be the bits [63:56] of the I/O Redirection Table entry for the interrupt associated with this message. This field directly identifies the interrupt target in IA-32 mode. This field along with EID field identifies the interrupt target in Intel Itanium processor 9300 series mode. **In IA-32 mode:** For physical mode interrupts, this field becomes APICID[7:0] on the Intel QuickPath Interconnect interrupt packet and APICID[31:8] are reserved in the Intel QuickPath Interconnect packet. For logical cluster mode interrupts, [19:16] of this field becomes APICID[19:16] on the Intel QuickPath Interconnect interrupt packet and [15:12] of this field becomes APICID[3:0] on the Intel QuickPath Interconnect interrupt packet. For logical flat mode interrupts, [19:12] of this field becomes APICID[7:0] on the Intel QuickPath Interconnect interrupt packet. **In** Intel Itanium processor 9300 series **mode:** Tis field becomes APICID[15:8] of the Intel QuickPath Interconnect interrupt packet.
11:4	**EID:** This will be the bits [55:48] of the I/O Redirection Table entry for the interrupt associated with this message. When interrupt remapping is disabled, this field is applicable only for Intel Itanium processor 9300 series and this field along with Destination ID identifies the interrupt target in Intel Itanium processor 9300 series mode. In Intel Itanium processor 9300 series mode, this field becomes APICID[7:0] on the Intel QuickPath Interconnect interrupt packet and APICID[31:16] are reserved in the Intel QuickPath Interconnect packet.
3	**Redirection Hint**: This bit allows the interrupt message to be directed to one among many targets, based on chipset redirection algorithm. 0 = The message will be delivered to the agent (CPU) listed in bits [19:4] 1 = The message will be delivered to an agent based on the IOH redirection algorithm and the scope the interrupt as specified in the interrupt address. The Redirection Hint bit will be a 1 if bits [10:8] in the Delivery Mode field associated with corresponding interrupt are encoded as 001b (Lowest Priority). Otherwise, the Redirection Hint bit will be 0.
2	**Destination Mode:** This is the corresponding bit from the I/O Redirection Table entry. 1=logical mode and 0=physical mode. This bit determines if IntLogical or IntPhysical is used on Intel QuickPath Interconnect.
1:0	00

Table 8-5. MSI Data Format when Remapping Disabled

Bits	Description
31:16	0000h
15	**Trigger Mode:** 1 = Level, 0 = Edge. Same as the corresponding bit in the I/O Redirection Table for that interrupt.
14	**Delivery Status:** Always set to 1, that is, asserted
13:12	00
11	**Destination Mode:** This is the corresponding bit from the I/O Redirection Table entry. 1=logical mode and 0=physical mode. Note that this bit is set to 0 before being forwarded to Intel QuickPath Interconnect.
10:8	**Delivery Mode:** This is the same as the corresponding bits in the I/O Redirection Table for that interrupt.
7:0	**Vector:** This is the same as the corresponding bits in the I/O Redirection Table for that interrupt.

Table 8-6. MSI Address Format when Remapping is Enabled

Bits	Description
31:20	FEEh
19:4	**Interrupt Handle:** IOH looks up an interrupt remapping table in main memory using this field as an offset into the table
3	**Sub Handle Valid**: When IOH looks up the interrupt remapping table in main memory, and if this bit is set, IOH adds the bits 15:0 from interrupt data field to interrupt handle value (bit 19:4 above) to obtain the final offset into the remapping table. If this bit is clear, Interrupt Handle field directly becomes the offset into the remapping table.
2	**Reserved:** IOH hardware ignores this bit
1:0	00

Table 8-7. MSI Data Format when Remapping is Enabled

Bits	Description
31:16	**Reserved** – IOH hardware checks for this field to be 0 (note that this checking is done only when remapping is enabled
15:0	Sub Handle

All PCI Express devices are required to support MSI. The IOH converts memory writes to this address (both PCI Express and internal sources) as an IntLogical or IntPhysical transaction on Intel QuickPath Interconnect. The IOH supports two MSI vectors per root port for hot-plug, power management, and error reporting.

8.3.1 Interrupt Remapping

Interrupt remapping architecture serves two purposes:

- Provide for interrupt filtering for virtualization/security usages so that an arbitrary device cannot interrupt an arbitrary processor in the system
- Provide for IO devices to target greater than 255 processors as part of extended xAPIC architecture

Software can use interrupt remapping for either or both of the reasons above. When interrupt remapping is enabled in the IOH, IOH looks up a table in main memory to obtain the interrupt target processor and vector number. When the IOH receives an MSI interrupt (where MSI interrupt is any memory write interrupt directly generated by an IO device or generated by an I/OxAPIC like the integrated I/OxAPIC in the IOH/ICH/PXH) and the remapping is turned on, IOH picks up the 'interrupt handle' field from the MSI (bits [19:4] of the MSI address) and adds it to the Sub Handle field in the MSI data field if Sub Handle Valid field in MSI address is set, to obtain the final interrupt handle value. The final interrupt handle value is then used as an offset into the table in main memory as,

Memory Offset = Final Interrupt Handle * 16

where Final Interrupt Handle = if (Sub Handle Valid = 1) then {Interrupt Handle + Sub Handle} else Interrupt handle.

The data obtained from the memory lookup is called Interrupt Transformation Table Entry (IRTE) and is as follows:

As can be seen, all the information that used to be obtained directly from the MSI address/data fields are now obtained via the IRTE when remapping is turned on. In addition, the IRTE also provides for a way to authenticate an interrupt via the Requester ID, that is, the IOH needs to compare the Requester ID in the original MSI interrupt packet (that triggered the lookup) with the Requester ID indicated in the IRTE. If it matches, the interrupt is further processed, else the interrupt is dropped and error signaled. Subsequent sections in this chapter describe how the various fields in either the IRTE (when remapping enabled) or MSI address/data (when remapping disabled) are used by the chipset to generate IntPhysical/Logical interrupts on the Intel QuickPath Interconnect.

Figure 8-2. Interrupt Transformation Table Entry (IRTE)

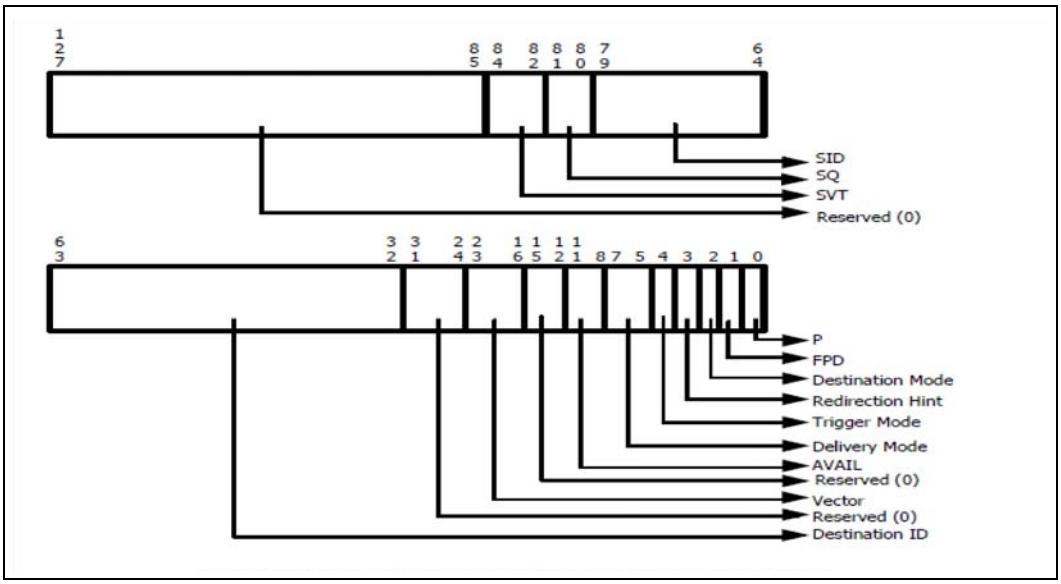

The Destination ID shown in the picture above becomes the APICID on the Intel QuickPath Interconnect interrupt packet.

8.3.2 MSI Forwarding: IA-32 Processor-based Platform

IA-32 interrupts have two modes – legacy mode and extended mode (selected via bit). Legacy mode has been supported in all Intel chipsets to date. Extended mode allows for scaling beyond 60/255 threads in logical/physical mode operation. Legacy mode has only 8-bit APICID support. Extended mode supports 32-bit APICID (obtained via the IRTE).

Table 8-8 summarizes interrupt delivery for IA-32 processor based platforms. Table 8-9 summarizes how the IOH derives the processor NodeID at which the interrupt is targeted.

Table 8-8. Interrupt Delivery

Mode	Sub-mode	Target APIC	NodeID Determined by IOH	IOH Behavior
Physical	Directed	APIC identified in APIC ID:EID fields	NodeID per Table 8-9	Send IntPhysical to selected Intel QuickPath Interconnect NodeID
	Redirected	APIC identified in APIC ID:EID	NodeID per Table 8-9	

Table 8-9. IA-32 Physical APICID to NodeID Mapping

Size	EID[1] (MSI Addr 11:4)	APIC ID[2] (MSI Addr 19:12)	NodeID[5:0]
1-16S	DC	abnn[3]00cc[4]	yyyy[5]10[6]/<NCNODEID>[7]
17-32S	DC	0aAbnncc	
33-64S	DC	aaabnncc	

Notes:

1. These bits must be set to 0 before forwarding to Intel QuickPath Interconnect.
2. Note that IOH hardware would pass these bits untouched from the interrupt source to Intel QuickPath Interconnect.
3. a, b represent the bits that are used to compare against the mask register to identify local versus remote clusters for interrupt routing. b is optionally included in the mask based on whether 4S clusters or 8S clusters are used for scaleup granularity.
4. cc in the table above refers to the core number in TW and IOH does not do anything with that value.
5. yyy is an arbitrary number that is looked up from a table using bits bnn of the APIC ID field. This flexible mapping is provided for CPU migration and also to prevent software in one partition send interrupts to software in another partition.
6. The 10 value in the NodeID field is points to the config agent in the CPU. Note that this value is programmable as well for the table as a whole.
7. When the mask bits match mask register value, the interrupt is considered local and is directed to the socket with NodeID=yyyy10. Otherwise the interrupt is remote and is routed to the node controller whose NodeID=NCNODEID, as derived from bits 28:24 of QPIPISAD register.

Listed below are some basic assumptions around MSI forwarding:

- Processors indicated in the APICID field of the interrupt address (except in the IA-32 broadcast/multicast interrupts) are all valid and enabled for receiving an interrupt. IOH does not maintain a vector of enabled APICs for interrupt redirection purposes.
- Redirected broadcast physical and logical cluster mode interrupts (that is, redirection hint bit being 1b and {legacy_mode <APICID=0xFF in physical mode and APICID[7:4]=0xF in logical cluster mode> OR extended_mode <APICID=0xFFFFFFFF in physical mode and APICID[31:16]=0xFFFFF in logical cluster mode>}) are not supported. IOH reports error if it receives one.
- Redirected broadcast flat mode interrupts (in legacy mode only) are supported
- Physical mode APICID and Extended Logical APICID have a direct correlation with the Intel QuickPath Interconnect NodeID and this relationship is setup by bios. OS never re-assigns the physical mode APICID or the extended mode logical ID.
  - IOH provides an ability to override the default relationship to support RAS features like OS-transparent migration, and so on. The overriding effect can be achieved either via the interrupt SAD entry (QPIPAPICSAD) that can pick a (limited) arbitrary relationship between Intel QuickPath Interconnect NodeID and Physical APICID (or) via broadcasting physical mode interrupts through BIOS setup (default is to not broadcast).

IOH supports the IntPriUpd message on Intel QuickPath Interconnect in order to know if the system is operating in logical flat or logical cluster mode. Even though this information is relevant for only legacy IA-32 interrupt mode, IOH, if it receives this message, will always extract this information from the message and update bit 1 in QPIPINTRC register. In modes other than IA-32 legacy mode, this register bit goes unused. This additional information outlines how this bit is set by the IOH. The IOH defaults to flat mode. On every IntPrioUpd message, IOH samples the flat/cluster mode bit in the message provided the APIC generating the message is indicated as enabled (that is, “disable” bit in the IntPrioUpd message data field should be cleared) in the message AND the APICID field in the message is non-zero (the latter check is performed only when QPIPINTRC[0] bit is 1). Once the bit is sampled, IOH updates QPIPINTRC[1] bit that tracks the flat/cluster mode for interrupt redirection purposes.

8.3.2.1 Legacy Logical Mode Interrupts

IA-32 legacy logical interrupts are broadcast by IOH to all processors in the system and it is the responsibility of the CPU to drop interrupts that are not directed to one of its local APICs. IOH supports hardware redirection for IA-32 logical interrupts (see Section 8.3.2.2) and in IOH-based platforms this is the only hardware redirection that is available in the system since the processor never does any internal redirection of these interrupts. IOH always clears the redirection hint bit on Intel QuickPath Interconnect when forwarding legacy logical mode interrupts. For IA-32 logical interrupts, no fixed mapping is guaranteed between the NodeID and the APICID since APICID is allocated by the OS and it has no notion of Intel QuickPath Interconnect NodeID. Again the assumption is made that APICID field in the MSI address only includes valid/enabled APICs for that interrupt. Refer to Table 8-10 for summary of IA-32 interrupt handling by IOH.

8.3.2.2 Legacy Logical Mode Interrupt Redirection – Vector Number Redirection

In the logical flat mode when redirection is enabled, IOH looks at the bits [6:4] (or 5:3/3:1/2:0 based on bits 4:3 of QPIPINTRC register) of the interrupt vector number and picks the APIC in the bit position (in the APICID field of the MSI address) that corresponds to the vector number. For example, if vector number[6:4] is 010, then the APIC correspond to MSI Address APICID[2] is selected as the target of redirection. If vector number[6:4] is 111, then the APIC correspond to APICID[7] is selected as the target of redirection. If the corresponding bit in the MSI address is clear in the received MSI interrupt, then,

- IOH adds a value of 4 to the selected APIC's address bit location and if the APIC corresponding to modulo eight of that value is also not a valid target (because the bit mask corresponding to that APIC is clear in the MSI address), then,
- IOH adds a value of 2 to the original selected APIC's address bit location and if the APIC corresponding to modulo eight of that value is also not a valid target, then IOH adds a value of 4 to the previous value, takes the modulo 8 of the resulting value and if that corresponding APIC is also not a valid target, then,
- IOH adds a value of 3 to the original selected APIC's address bit location and if the APIC corresponding to modulo eight of that value is also not a valid target, then IOH adds a value of 4 to the previous value, takes the modulo 8 of the resulting value and if that corresponding APIC is also not a valid target, then,
- IOH adds a value of 1 to the original selected APIC's address bit location and if the APIC corresponding to modulo eight of that value is also not a valid target, then IOH adds a value of 4 to the previous value, takes the modulo 8 of the resulting value and if that corresponding APIC is also not a valid target, then it is an error condition

In the logical cluster mode (except when APICID[19:16]!= Fh), the redirection algorithm works exactly as described above except that IOH only redirects between 4 APICs instead of 8 in the flat mode. So IOH uses only vector number bits [5:4] by default (selectable to 4:3/2:1/1:0 based on bits 4:3 of QPIPINTRC: Intel QuickPath Interconnect Protocol Interrupt Control register). The search algorithm to identify a valid APIC for redirection in the cluster mode is to:

- First select the APIC corresponding to the bit position identified with the chosen vector number bits. If the corresponding bit in the MSI address bits A[15:12] is clear, then,
- IOH adds a value of 2 to the original selected APIC's address bit location and if the APIC corresponding to modulo four of that value is also not a valid target, then,

- IOH adds a value of 1 to the original selected APIC's address bit location and if the APIC corresponding to modulo four of that value is also not a valid target, then IOH adds a value of 2 to the previous value, takes the modulo four of the resulting value and if that corresponding APIC is also not a valid target, then it is an error condition.

8.3.2.3 Legacy Logical Mode Interrupt Redirection – Round-Robin Redirection

IOH also supports a mode where the vector-based redirection is disabled and a simple round-robin mode is selected for redirection between the cores/APICs. In the logical flat mode, redirection is done in a round-robin fashion across the cores that are enabled via the corresponding mask bit in the interrupt address (max possible 8 enabled cores). In the logical cluster mode (except when cluster id = Fh), IOH maintains round-robin logic per cluster (max 15 clusters) and within each cluster IOH round-robins amongst the valid APICs.

Round-robin algorithm defaults at power-on to starting from the LSB (in the bit mask) and moving towards the MSB.

8.3.2.4 Physical Mode Interrupts and Extended Logical Cluster Mode Interrupts

By default, IA-32 physical interrupts and IA-32 extended logical cluster mode interrupts are directed to the correct socket by IOH, with the exception of the physical/extended cluster mode broadcast interrupts. Legacy physical mode broadcast interrupts are ones with APICID[7:0]=0xFF. Extended physical mode broadcast interrupts are ones with APICID[31:0]=0xFFFFFFFF. Extended cluster mode broadcast interrupts are ones with APICID[31:16]=0xFFFF. The default non-broadcast behavior can be changed via QPIPINTCR[6] where even these interrupts are broadcast.

IOH does not perform any hardware redirection of IA-32 physical mode interrupts (legacy or extended). IOH simply forwards the RH bit on these interrupts, except when these interrupts are broadcast (via bit QPIPINTCR[6]) as well, when the RH bit is cleared for legacy mode. IOH performs redirection of extended cluster mode interrupts as described in Section 8.3.2.2 and Section 8.3.2.3, with the additional detail that there can be up to 8 processors within a cluster in the extended mode. So the vector-based algorithm and round-robin algorithm described in these sections should be extended to up to 8 targets within a cluster for supporting extended mode. When IOH does the extended cluster mode redirection, IOH clears the RH bit (in addition to setting the mask bit corresponding to only the selected processor) before the interrupt is forwarded to the Intel® QuickPath Interconnect. Redirection of extended cluster mode interrupt can be disabled via bit 2 in QPIPINTCR. When extended cluster mode redirection is disabled, IOH simply forwards the interrupt as is to the Intel® QuickPath Interconnect (regardless of whether the interrupt is routed or broadcast)- including the RH bit.

In IA-32 physical mode (legacy or extended) and extended cluster mode, the mapping between APICID and NodeID is obtained as described in the QPIPAPICSAD register, with one exception when the Physical APICID filed has a value of <0xFF (in legacy mode) or 0xFFFFFFFF (in extended mode)> or the extended logical cluster ID had a value of 0xFFFF, which indicate broadcast. Also, in the IA-32 physical mode, the APIC identified in the APICID field is always valid excluding the exception (broadcast) case. Note that QPIPAPICSAD register also provides details about how physical/extended-logical interrupt routing happens in hierarchical systems with node controller. For these systems, interrupts need to be either routed to a processor within the local cluster the interrupt device belongs to or to a remote processor via the node controller. So IOH

needs to check for local/remote routing as described in that register and if local, directly route the interrupt to the processor in the cluster and if remote, route to the node controller, whose NodeID is also identified in the QPIPAPICSAD register.

8.3.2.5 IA-32 Interrupt Delivery Summary

Table 8-10. IA-32 Interrupt Delivery Summary (Sheet 1 of 2)

Mode[1]		Sub-Mode[2]	APICID	Target APIC	NodeID Determined by IOH	IOH Behavior
Legacy Physical		Directed	APICID[7:0]!=0xFF	APIC identified in APICID	NodeID[3] as determined by QPIPAPICSAD register	IntPhysical to selected[3] Intel QuickPath Interconnect NodeID
			APICID[7:0]=0xFF	All enabled APICs	All CPU NodeIDs	Broadcast IntPhysical to all CPU NodeIDs.
		Redirected	APICID[7:0]!=0xFF	APIC identified in APICID field	NodeID[4] as determined by QPIPAPICSAD register	IntPhysical to selected[4] Intel QuickPath Interconnect NodeID
			APICID[7:0]=0xFF	-	-	Report Error
Extended Physical		Directed	APICID[31:0]!=0xFF FFFFFF	APIC identified in APICID	NodeID[3] as determined by QPIPAPICSAD register	IntPhysical to selected[3] Intel QuickPath Interconnect NodeID
			APICID[31:0]=0xFF FFFFFF	All enabled APICs	All CPU NodeIDs	Broadcast IntPhysical to all CPU NodeIDs.
		Redirected	APICID[31:0]!=0xFF FFFFFF	APIC identified in APICID field	NodeID[4] as determined by QPIPAPICSAD register	IntPhysical to selected[4] Intel QuickPath Interconnect NodeID
			APICID[31:0]=0xFF FFFFFF	-	-	Report Error
Legacy Logical	Flat[5]	Directed	DC	APICs specified in APICID[7:0] bit vector	All CPU NodeIDs	IntLogical to all CPU Intel QuickPath Interconnect NodeIDs (IOH can broadcast up to 8S in a cluster)
		Redirected	DC	IOH selects one APIC from 8 possible APICs specified by APICID[7:0], in a simple round-robin (OR) APIC selection based on Vector-Number[6]	All CPU NodeIDs	IntLogical to all CPU Intel QuickPath Interconnect NodeIDs (IOH can broadcast up to 8S in a cluster)

Table 8-10. IA-32 Interrupt Delivery Summary (Sheet 2 of 2)

Mode[1]		Sub-Mode[2]	APICID	Target APIC	NodeID Determined by IOH	IOH Behavior
Legacy Logical	Cluster	Directed	APICID[19:16]!=0xF	Specified APIC(s) of APICID[3:0] in the specified cluster identified by APICID[19:16]	All CPU NodeIDs	IntLogical to all CPU NodeIDs (IOH can broadcast up to 8S in a cluster)
			APICID[19:16]=0xF	Specified APIC(s) in all clusters	All CPU NodeIDs	IntLogical to all CPU NodeIDs (IOH can broadcast up to 8S in a cluster)
		Redirected[7, 8]	APICID[19:16]!=0xF	IOH selects one APIC from 4 possible APICs specified by bit-vector APICID[3:0] a simple round-robin involving the four APICs in the cluster (note this requires IOH to maintain a round-robin arbiter per cluster, max 15 arbiters) OR APIC selection based on Vector-Number[9]	All CPU NodeIDs (IOH can broadcast up to 8S in a cluster)	IntLogical to all CPU NodeIDs
			APICID[19:16]=0xF	-	-	Report Error
Extended Logical	Cluster[10]	Directed	APICID[31:16]!=0xF FFF	Specified APIC(s) of APICID[15:0] in the specified cluster identified by APICID[31:16]	NodeID[3] as determined by QPIPAPICSAD register	IntLogical to selected[3] Intel QuickPath Interconnect NodeIDs
			APICID[31:16]=0xF FFF	Specified APIC(s) in all clusters	All CPU NodeIDs	IntLogical to all CPU NodeIDs (IOH can broadcast up to 8S in a cluster)
		Redirected[11, 12]	APICID[31:16]!=0xF FFF	IOH selects one APIC from 8 possible APICs specified by bit-vector APICID[7:0] a simple round-robin involving the 8 APICs in the cluster (note this requires IOH to maintain a round-robin arbiter per cluster, max 15 arbiters)	NodeID[3] as determined by QPIPAPICSAD register	IntLogical to selected[3] Intel QuickPath Interconnect NodeIDs
			APICID[31:16]=0xF FFF	-	-	Report Error

Notes:

1. Determined by either bit A[2] in the MSI address (when remapping is disabled) or by the combination of EIE bit in the Interrupt Remapping Table Address registers (defined in VT-d2 spec) and RTE[2] (when remapping is enabled)
2. Determined by either bit A[3] in MSI address (when remapping is disabled) or IRTE[3] (when remapping is enabled). Value of 1b is redirected and 0b is directed
3. This default 'routed' behavior can be changed via QPIPINTRC[6], so that these interrupts are broadcast to all processors. Final RH is defined by QPIPINTRC: Intel QuickPath Interconnect Protocol Interrupt Control.
4. This default 'routed' behavior can be changed via QPIPINTRC[6], so that these interrupts are broadcast to all processors. Final RH is defined by QPIPINTRC: Intel QuickPath Interconnect Protocol Interrupt Control.
5. The sub-mode within logical addressing mode is determined by bit 1 in QPIPINTRC: Intel QuickPath Interconnect Protocol Interrupt Control
6. See Section 8.3.2.2 for details.

7. IOH will always set the redirection hint bit to a 0 when sending IntLogical messages in legacy mode, on Intel QuickPath Interconnect. Note IOH can set/clear RH bit in IntLogical Messages in the extended mode, depending on whether it is performing extended logical mode redirection or not
8. While redirecting interrupts, IOH selects one APIC among many and updates the APICID field in the received interrupt, with only the bit corresponding to the selected APIC set and all other bits clear, before forwarding to Intel QuickPath Interconnect
9. See Section 8.3.2.2 for details
10. Extended Flat mode is not architecturally supported
11. IOH will always set the redirection hint bit to a 0 when sending IntLogical messages in legacy mode, on Intel QuickPath Interconnect. Note IOH can set/clear RH bit in IntLogical Messages in the extended mode, depending on whether it is performing extended logical mode redirection or not
12. While redirecting interrupts, IOH selects one APIC among many and updates the APICID field in the received interrupt, with only the bit corresponding to the selected APIC set and all other bits clear, before forwarding to Intel QuickPath Interconnect.

8.3.3 MSI Forwarding: Intel Itanium Processor 9300 Series Based Platform

Table 8-11 summarizes the interrupt delivery requirements when IOH is in Intel Itanium processor 9300 series mode. The APICID[15:0] field identifies the targeted APIC. In Intel Itanium processor 9300 series, the APIC identified in the APICID field is always valid/enabled and IOH can always direct any incoming MSI to the corresponding APIC.

Table 8-11. Itanium® Processor Family Platform Interrupt Delivery

Mode	Sub-mode	Target APIC	NodeID Determined by IOH	IOH Behavior
Physical	Directed	APIC identified in APICID[15:0][1] field	NodeID[2] as determined by QPIPAPICSAD register	Send IntPhysical to selected[2] Intel QuickPath Interconnect NodeID
	Redirected			

Notes:

1. APICID[31:16] on Intel® QuickPath Interconnect is reserved in Intel Itanium processor 9300 series mode
2. This default 'routed' behavior can be changed via QPIPINTCR[6], so that these interrupts are broadcast to all processors. When these interrupts are broadcast, the RH bit is always set to 0 in the Intel® QuickPath Interconnect packet, otherwise it is preserved from the original MSI interrupt/IRTE entry

The mapping between APICID and NodeID is obtained as described in the QPIPAPICSAD register. There are some peculiarities associated with APICID to NodeID conversion for the Intel Itanium processor 9300 series which is discussed during the latter part of this section. QPIPAPICSAD register also provides details about how physical interrupt routing happens in hierarchical systems with node controller. For these systems, interrupts need to be either routed to a processor within the local cluster the interrupt device belongs to or to a remote processor via the node controller. So IOH needs to check for local/remote routing as described in that register and if local, directly route the interrupt to the processor in the cluster and if remote, route to the node controller, whose NodeID is also identified in the QPIPAPICSAD register.

Regarding APICID to Intel® QuickPath Interconnect NodeID conversion, APICID[11:8] identify the core within the CPU socket that the targeted APIC resides in. APICID[7:0]&APICID[15:12] identify the socket. This is how the Intel Itanium processor 9300 series does the APICID assignment and the IOH has to follow suit. This is illustrated in Table 8-12. In general, in the Intel Itanium processor 9300 series, the NodeID for an interrupt can always be derived statically from the APICID field since this mapping is under BIOS/firmware control. But IOH supports OS transparently migrating a CPU from a running socket to a spare back-up socket and also the ability to mask interrupts from reaching certain sockets/cores for hard-partition management. These require the flexibility to map any APIC ID to any NodeID and IOH supports a table (as described in QPIPAPICSAD register) for this purpose.

IOH does not support any priority update messages on Intel QuickPath Interconnect (IOH will complete any IntPrioUpd message received normally on Intel QuickPath Interconnect but it has no effect on the interrupt forwarding behavior of IOH) for Intel Itanium processor 9300 series mode interrupt delivery and IOH does not support any interrupt redirection in Intel Itanium processor 9300 series mode. Expectation is that OS distributes the interrupts evenly across all the CPUs. Also, Intel Itanium processor 9300 series CPUs provide redirection amongst the cores in the socket and this is sufficient optimization.IOH, when setup for 'routed' mode, passes along the redirection hint bit it received in the MSI address/IRTE to the IntPhysical message. When IOH is setup for IntPhysical messages to be broadcast, it always clears the RH bit in the interrupt packet on Intel QuickPath Interconnect.

Table 8-12. Intel Itanium Processor 9300 Series APICID to NodeID Mapping Example (Setup through QPIPAPICSAD Register)

Size	APICID[15:8]	APICID[7:0]	NodeID[5:0]
1-16S	ssss[1]cccc[2]	00000000	LocalNodeID[3]/ <NCNODEID>[4]
17-32S	ssssccc	00000s00	
33-64S	ssssccc	0000ss00	
65-128S	ssssccc	000sss00	
129-256S	ssssccc	00ssss00	

Notes:

1. s represents the bits that are used to identify socket
2. c in the table above refers to the bits used to identify core number in Intel Itanium processor 9300 series.
3. LocalNodeID is an arbitrary number that is looked up from a table using bits a subset of 's' bits from the APIC ID field. This flexible mapping is provided for CPU migration and also to prevent software in one partition send interrupts to software in another partition.
4. When interrupt is determined to be local (see QPIPAPICSAD registeR), NodeID=yyyy10. Otherwise the interrupt is remote and is routed to the node controller whose NodeID=NCNODEID, as derived from bits 13:8 of QPIPAPICSAD register.

8.3.4 External I/OxAPIC Support

I/OxAPICs can also be present in external devices such as the PCI Express-to-PCI-X/ PCI bridge (PXH) and ICH. For example, the PXH has two integrated I/OxAPICs, one per PCI bus, that are used to convert the INTx wire interrupts from PCI slots to local APIC memory writes. These devices require special decoding of a fixed address range FECx_xxxx in the IOH. The IOH provides these decoding ranges which are outside the normal prefetchable and non-prefetchable windows supported in each root port. Refer to Chapter 7, "System Address Map" for address decoding details.

8.4 Virtual Legacy Wires

In IA-32, IOH can generate VLW messages on Intel QuickPath Interconnect. The conditions are:

- Receiving NMI/SMI#/INTR/INIT# signals from the legacy bridge and forwarding to Intel QuickPath Interconnect as inband VLW messages. Similarly, the IOH receives the FERR# message from Intel QuickPath Interconnect and converts it to a pin output in the legacy IOH.
- Generating SMI/NMI VLW messages for error events the IOH reports directly to the processor.

The rest of this section describes generating VLW messages from the legacy pins only.

The IOH also supports converting the NMI/SMI#/INIT# signals to IntPhysical messages on Intel QuickPath Interconnect for Intel Xeon processor 7500 series and Intel Itanium processor 9300 series based platforms. Refer to Section 8.5.2 for details. SMI#, NMI and INIT# are treated as edge-sensitive signals and INTR is treated as level-sensitive. The IOH generates a message on Intel QuickPath Interconnect for SMI#, NMI and INIT# whenever there is an asserting edge on these signals. The IOH creates a message on Intel QuickPath Interconnect for INTR whenever there is an asserting or a deasserting edge on these signals.

The IOH receives the FERR message from Intel QuickPath Interconnect and pulses the FERR# pin output to the legacy ICH. The IOH guarantees that any subsequent transactions to ESI (that is, transactions ordered behind FERR message) are not delivered to ESI till the FERR# pin asserts.

Note: Design should provide as much timing delay as possible between assertion of FERR# pin and delivering subsequent transactions to ESI, to keep the legacy FERR# emulation in Intel QuickPath Interconnect platforms, as close as possible to FSB platforms.

All the VLW messages (inbound over Intel QuickPath Interconnect) are considered 'synchronous' These messages are inserted on Intel QuickPath Interconnect ahead of any completions from the ESI port. That is, as soon as the IOH sees an edge on the legacy signals from the IOH and a VLW message is to be scheduled, that VLW message is pushed ahead of any pending completion transactions from the ESI port.

The IOH broadcasts *all* VLW messages to all processors within the partition. The IOH does not support outbound VLW messages.

8.5 Platform Interrupts

8.5.1 GPE Events

The IOH generates GPE events for PCI Express Hot-Plug (Assert/Deassert_HPGPE) and PCI Express power management (Assert/Deassert_PMEGPE). PXH components below the IOH could generate Assert/Deassert_GPE messages for PCI-X slot hot-plug events. These GPE events are sent as level-triggered virtual wire messages to the legacy ICH. Processors generate Intel QuickPath Interconnect GPE messages for internal socket events. The Intel QuickPath Interconnect GPE events are routed as DO_SCI messages, which are edge triggered, to the legacy ICH.

The same rules that govern the collection and routing of legacy PCI INTx messages (refer to Section 8.2) through an IOH, also govern the collection and routing of all level-sensitive GPE messages.

Figure 8-3 illustrates how hot-plug and Power Management GPE messages are routed to the legacy ICH.

Figure 8-3. Assert/Deassert_(HP, PME) GPE Messages

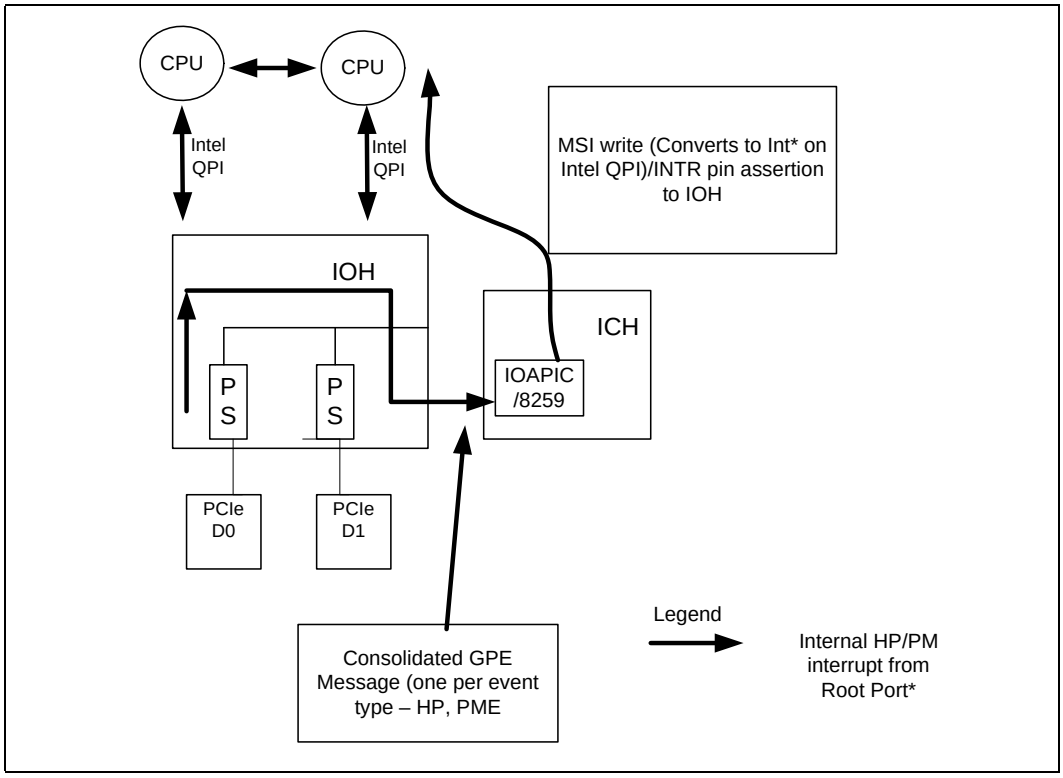

Figure 8-4 illustrates how GPE messages from the processor are routed to the legacy ICH. Processors generate GPE for a variety of events. Refer to the appropriate processor specification for details. Since the GPEX messages from the processor are edge-triggered and the DO_QPI message on ESI is also edge-triggered, the IOH transparently converts the Intel QuickPath Interconnect GPE message to the DO_SCI message and does not maintain any status bits.

Figure 8-4. Intel QuickPath Interconnect GPE Messages from Processor and DO_SCI Messages from IOH

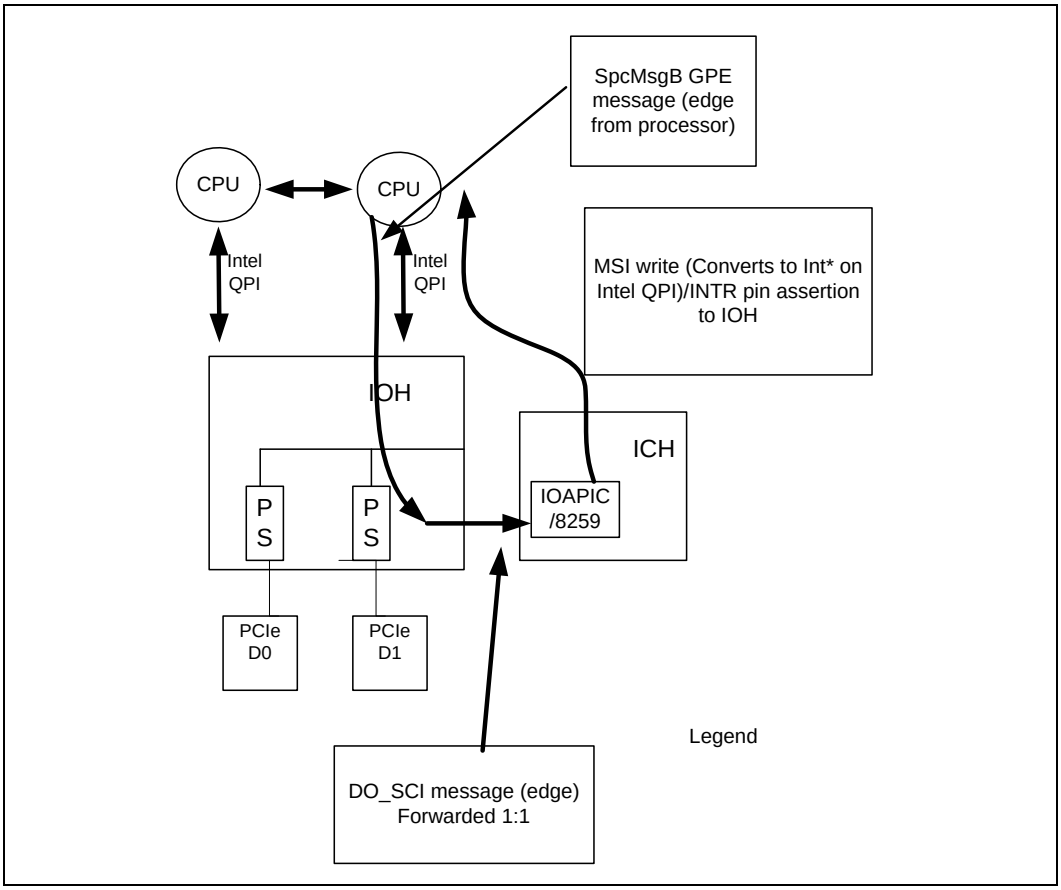

8.5.2 PMI/SMI/NMI/MCA/INIT

The IOH can directly generate the IntPhysical (PMI/SMI/NMI/MCA) messages on Intel QuickPath Interconnect (ICH is bypassed) for RAS events such as errors and Intel® QuickPath Interconnect hot-plug. Also, refer to Chapter 16, "IOH Error Handling Summary" for error event causes of these interrupts. IOH generates an IntPhysical message on Intel QuickPath Interconnect for generating these interrupts. Note that the NMI pin input can be controlled to generate either a IntPhysical(NMI) or IntPhysical(MCA) message via the Interrupt Control Register (INTRCTRL). See the Chapter 21, "Configuration Register Space" for details.

Note: Software is responsible for programming the IOH error interrupt registers with the appropriate interrupt address and data when generating any of the interrupts above. Any broadcast requirements (for example, SMI interrupt) is indicated by programming the APICID field of the interrupt address with a value of 0xFF. The IOH does not make the determination that an interrupt should be broadcasted based on interrupt encoding.

8.5.2.1 INIT#

IOH supports converting the INIT# pin into the corresponding IntPhysical message on Intel QuickPath Interconnect. An IntPhysical (INIT) message is sent on Intel QuickPath Interconnect whenever there is an asserting edge on INIT signal.

8.5.2.2 Global SMI

Normally, the IOH generates SMI based on some internal event or when it receives an SMI from one of its downstream ports. These SMI events are only sent to the sockets within the specific partition. Global SMI is used during quiescence flows on Intel QuickPath Interconnect where the Intel QuickPath Interconnect link configuration changes, for quickly bringing the system to a quiesced state. The IOH uses the quiescence broadcast list to send this global SMI. Note that in systems with larger than 8S, firmware must write to multiple IOHs to broadcast SMI to all processors in the system.

8.5.2.3 Software Initiated MCA

The IOH provides the capability to programmatically generate an MCA. Software can write to the 'Trigger MCA' bit in the MCA Register (MCA) to trigger an MCA to an indicated processor core within the partition.

8.5.3 CPEI

All non-legacy IOHs route hardware corrected errors they detect as ERR_COR message to the legacy IOH. This includes the PCI Express corrected errors also, provided native handling of these errors by the OS is disabled. If legacy IOH is to be reached over Intel QuickPath Interconnect, the transaction is tunneled on Intel QuickPath Interconnect via the NcP2PB packet. All CPEI events from processors are also sent to the legacy IOH via the Intel QuickPath Interconnect CPEI message. Legacy IOH combines the corrected error messages received from processors and IOHs.

ERR_N[0] will not be asserted from the message block by decoding CPEI message. A CPEI message is decoded by the Intel QuickPath Interconnect block where the corresponding error logging status bit is set. The Intel QuickPath Interconnect block also drives the appropriate error severity signal to the Global Error Escalation block to assert the error pin ERR_N[0].

When legacy IOH converts an Intel QuickPath Interconnect CPEI message (which is edge-triggered) or an ERR_COR message to the ERR[0] pin (which is level-sensitive), it maintains a status bit, bit 0 in Section 21.6.7.10. When this status bit is set, further Intel QuickPath Interconnect CPEI or ERR_COR messages are simply dropped. When this bit is cleared, a new Intel QuickPath Interconnect CPEI or ERR_COR message will set the status bit and assert the ERR[0] pin. Software must clear this status bit before it polls all sources of corrected errors.

§

9 System Manageability

9.1 Introduction

This section combines many different features into one category that aids in platform or system management. Features such as SMBus and JTAG Test Access Port provide the protocol interfaces for access to the configuration registers. These registers are the program interface between the logical feature implementation and the software interface producing or consuming the data. System management uses this data for error diagnosis, system integrity, or work load analysis to optimize the performance of the platform.

Several miscellaneous features that aid in system manageability are presented here.

9.2 Error Status and Logging

System manageability requires that errors and their logs are captured in registers and accessible through the SMBus interface. Error status and logging is defined in the IOH RAS section of this specification for further information. Error counters and a “Stop on Error” feature are provided to support system management functions. An error freeze mechanism, with programmable error severity, is also provided, to halt traffic on the interfaces when an error occurs. Details are described in Section 16.4.4.3, “Stop on Error” on page 227.

9.3 Component Stepping Information

Component stepping information is provided for PCI Express RID assignments. This information is also used in the JTAG ID code field. BIOS can override this value so that old code can execute on a newer stepping of the IOH.

9.4 Intel® Interconnect Built-In Self Test

Intel® Interconnect Built-In Self Test (Intel® IBIST) has features for the IOH’s Intel QuickPath Interconnect and PCI Express interfaces. Intel IBIST is only available through the JTAG port using an externally enabled third party vendor. Contact your Intel Sales Representative for vendor information.

9.5 Hot-Plug Status Access

System management has full access to the status and control registers for hot-plug events. PCI Express hot-plug events are controlled through configuration register access.

9.6 Link Status Indication

Each Intel QuickPath Interconnect and PCI Express interface contains status bits to indicate if it is currently active and the frequency of operation. See Table 9-1.

Table 9-1. Status Register Location Table

Interface	Register Reference	Comments
Intel QuickPath Interconnect – Frequency Indication	Section 21.6.7.19, "CAPTIM: Cap Timer"	The register contains the frequency of each port.
PCI Express – Active	Section 21.12.4.20, "LNKSTS: PCI Express Link Status Register"	Bits [9:4] indicates the negotiated width.
PCI Express – Frequency Indication	Section 21.12.4.20, "LNKSTS: PCI Express Link Status Register"	Bits [3:0] will indicate the link speed.

9.7 Thermal Sensor

The IOH integrates a thermal sensor that allows system management software to monitor and regulate the thermal activity levels in the die.

§

10 Power Management

10.1 Introduction

IOH power management is compatible with the *PCI Bus Power Management Interface Specification,* Revision 1.1 (referenced as PCI-PM). It is also compatible with the *Advanced Configuration and Power Interface (ACPI) Specification*, Revision 2.0b. The IOH is designed to operate seamlessly with operating systems employing these specifications.

Figure 10-1. ACPI Power States in G0 and G1 States

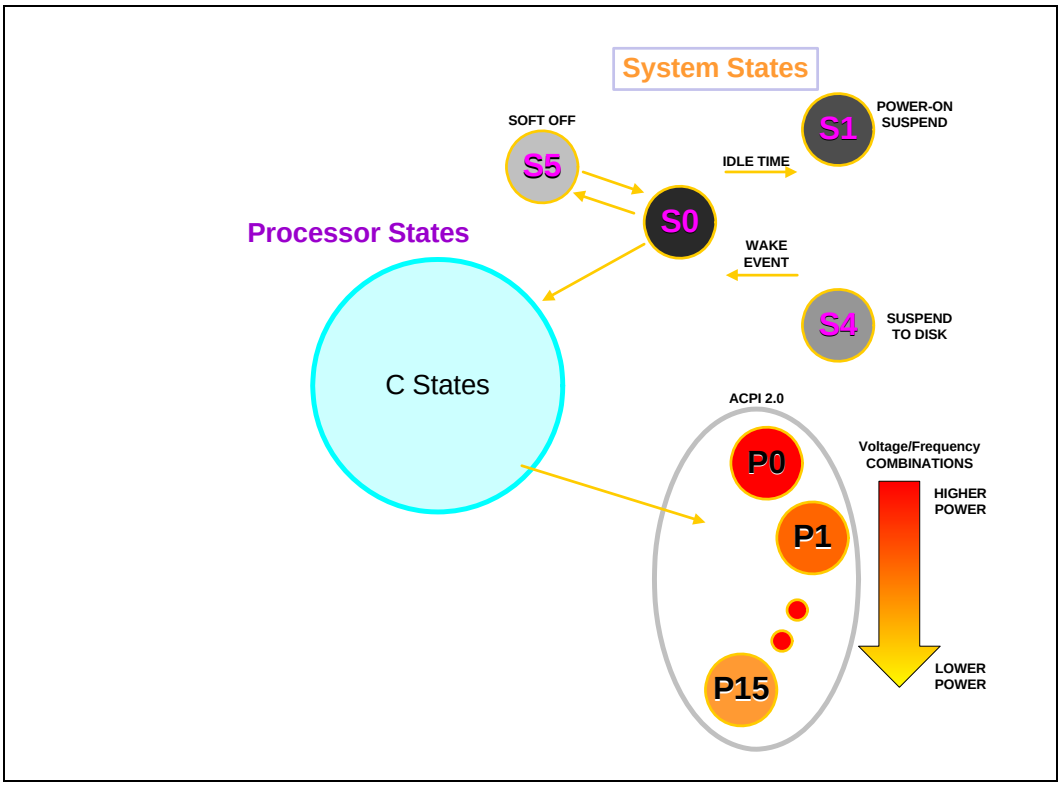

Platforms are expected to incorporate a system management controller, such as the BMC. Numbers of "P"-states cited in Figure 10-1 are examples ONLY. P-states supported by the platform should not be inferred from these examples.

Figure 10-2. Typical Platform Showing Power Saving Signals to BMC

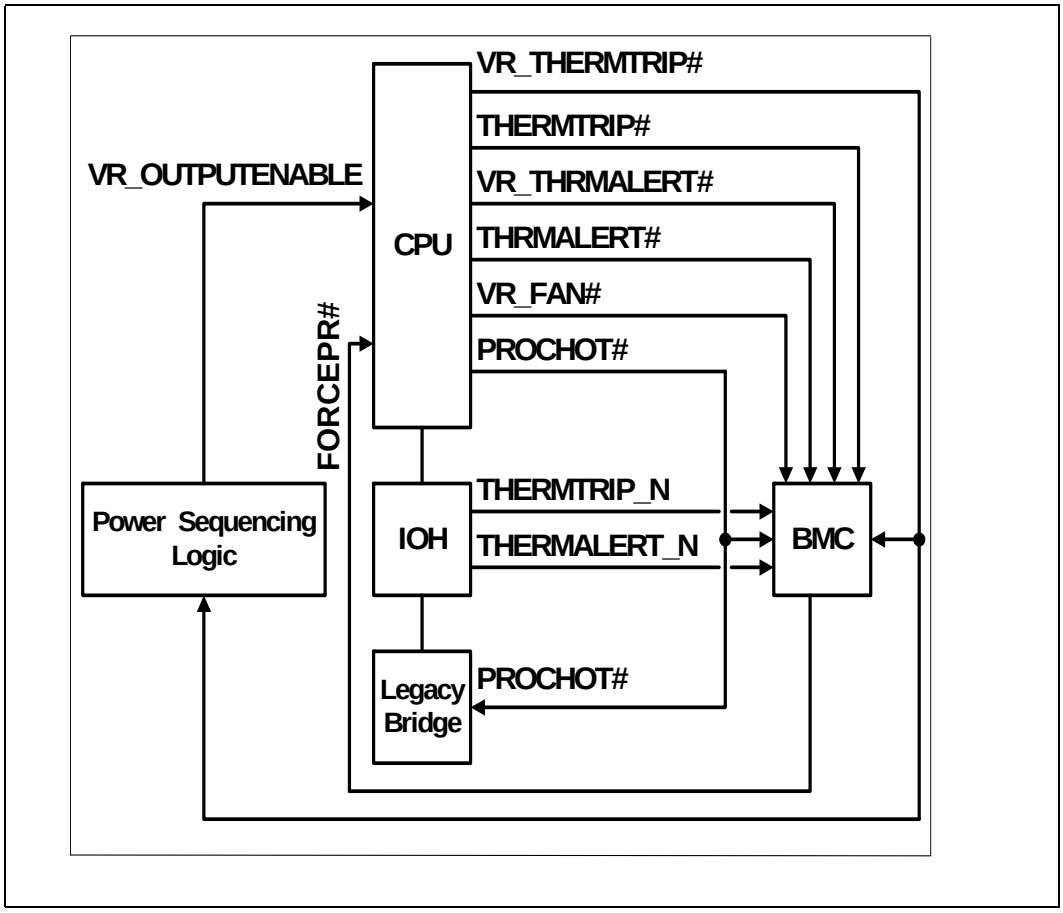

10.2 Supported Processor Power States

Refer to Table 10-1 for examples. Since no Intel QuickPath Interconnect messages are exchanged upon C-state transitions within the processor sockets, the IOH is not involved.

Refer to Table 10-2 for further details connected with System (S) states.

10.3 Supported System Power States

The supported IOH system power states are enumerated in Table 10-1. Note that no device power states are explicitly defined for the IOH. In general, the IOH power state may be directly inferred from the system power state.

Table 10-1. IOH Platform Supported System States

System State	Description
S0	**Full On** Normal operation.
S1	**Stop-Grant** • No reset or re-enumeration required. • Context preserved in caches and memory. • All processor threads go to the C1 state. • After leaving only one "monarch" thread alive among all threads in all sockets, system software initiates an I/O write to the SLP_EN bit in the ICH's power management control register (PMBase + 04h) and then halts the "monarch". This will cause the ICH to send the GO_C2 ESI message to the IOH. The IOH responds with an ACK_C2 ESI message to the ICH. (The "monarch" is the thread that executes the S-state entry sequence.)
S4	**Suspend to Disk (STD) [Supported]** CPU, PCI and Memory reset. The S4 state is similar to S3 except that the system context is saved to disk rather that main memory. This state is commonly known as "Hibernate". The IOH uses the same sequence as S3.
S5	**Soft off [Supported]** Power removed. The IOH supports this mode by following the S3 sequence.

The IOH platform supports the S0 (fully active) state since this is required for full operation. The IOH also supports a system level S1 (power-on suspend) state but the S2 is not supported. The IOH supports S4/S5 powered-down idle sleep states. In the S4/S5 states, platform power and clocking are disabled, leaving only one or more auxiliary power domains functional. Exit from the S4 and S5 states requires a full system reset and initialization sequence.

A request to enter the S4/S5 power states are communicated to the IOH by the ICH via the "***Go_S3"*** vendor defined message on the ESI interface. In response, the IOH will return an ***"Ack_S3"*** vendor defined message to the ICH. Upon completion of this sequence, the IOH will tolerate the removal of all reference clocks and power sources. A full system initialization and configuration sequence is required upon system exit from the S4/S5 states, as non-AUX internal configuration information is lost throughout the platform. AUX power sources must remain "up."

10.3.1 Supported Performance States

The IOH platform does not coordinate P-state transitions between processor sockets with Intel QuickPath Interconnect messages. As such, the IOH supports, but is uninvolved with, P-state transitions.

10.3.2 Supported Device Power States

The IOH supports all PCI-PMI and PCI Express messaging required to place any subordinate device on any of its PCI Express ports into any of the defined device low power states. Peripherals attached to the PCI segments provided via the ICH/PXH components may be placed in any of their supported low power states via messaging directed from the IOH through the intervening PCI Express hierarchy.

In addition, the Crystal Beach integrated device (DMA) in the IOH can be placed in D0 or D3hot states by programming the PMCSR register of its power management structure. Any of the standard PCI Express ports[1] and ESI can be placed in D0 or D3hot states by programming the respective PMCSR registers.

Directly attached native PCI Express devices are not limited in their available low power states, although not all available states support the downstream device “wake-up” semantic.

10.3.3 Supported ESI Power States

Transitions to and from the following Power Management states are supported on the ESI Link:

Table 10-2. System and ESI Link Power States

System State	CPU State	Description	Link State	Comments
S0	C0	Fully operational / Opportunistic Link Active-State.	L0/L0s	Active-State Power Management
S0	C1	CPU Auto-Halt	L0/L0s	Active-State Power Management
S1	C2	(S1 same as C1/C2)	L0/L0s	Active-State Power Management
S3/S4/S5	N/A	STR/STD/Off	L3	Requires Reset. System context not maintained in S5.

10.4 Intel® QuickData Technology Power Management

Chipset devices that implement Intel® QuickData Technology (formerly code named Crystal Beach) as well as client I/O devices that use Intel QuickData Technology may support different device power states. The IOH Intel QuickData Technology device supports the D0 device power state that corresponds to the “fully-on” state and a pseudo D3hot state. Intermediate device power states D1 and D2 are not supported. Since there can be multiple permutations with Intel QuickData Technology and/or its client I/O devices supporting the same or different device power states, care must be taken to ensure that a power management capable operating system does not put the Intel QuickData Technology device into a lower device power (for example, D3) state while its client I/O device is fully powered on (that is, D0 state) and actively using Intel QuickData Technology. Depending on how Intel QuickData Technology is used under an OS environment, this imposes different requirements on the device and platform implementation.

10.4.1 Power Management with Assistance from OS Level Software

In this model, there is a Intel QuickData Technology device driver and the host OS can power-manage the Intel QuickData Technology device through this driver. The software implementation must make sure that the appropriate power management dependencies between the Intel QuickData Technology device and its client I/O devices are captured and reported to the operating system. This is to ensure that the operating system does not send the Intel QuickData Technology device to a low power (for example, D3) state while any of its client I/O devices are fully powered on (D0) and actively using Intel QuickData Technology. For example, the operating system might attempt to transition the Intel QuickData Technology device to D3 while placing the system into the S4 (hibernate) system power state. In that process, it must not

1. This is a Pseudo state. The IOH will not physically power down the logic associated with the PCI Express/ESI ports though the D3hot is supported. From Software point of view, it appears as if the device goes into D3hot. Future proliferations could consider real D3hot implementations on the PCI Express ports.

transition the Intel QuickData Technology device to D3 before transitioning all its client I/O devices to D3. In the same way, when the system resumes to S0 from S4, the operating system must transition the Intel QuickData Technology device from D3 to D0 before transitioning its client I/O devices from D3 to D0.

10.5 Device and Slot Power Limits

All add-in devices must power-on to a state in which they limit their total power dissipation to a default maximum according to their form-factor (10W for add-in edge-connected cards). When BIOS updates the slot power limit register of the root ports within the IOH, the IOH automatically transmits a Set_Slot_Power_Limit message with corresponding information to the attached device. It is the responsibility of platform BIOS to properly configure the slot power limit registers in the IOH. Failure to do so may result in attached endpoints remaining completely disabled in order to comply with the default power limitations associated with their form-factors.

10.5.1 ESI Power Management

1. The IOH sends the ACK-Sx for Go-C0, Go-C2, Go-S3 messages.
2. The IOH never sends an ACK-Sx unless it has received a Go-Sx.

10.5.1.1 S0 -> S1 Transition

Note: Steps referring to SAL are for Intel Itanium Processors based systems only

1. The processor “monarch” thread spins on a barrier
2. The OSPM “monarch” performs the following functions:
   - Disables interrupts
   - Raises TPR to high
   - Sets up the ACPI registers in the ICH
   - Sets the fake SLP_EN which triggers a SAL_PMI
   - Spins on WAK_STS
3. The SAL PMI handler writes the Sleep Enable (SLP_EN) register in the Legacy Bridge. After this, the last remaining “monarch” thread halts itself.
4. The ICH responds to the SLP_EN write by sending the Go_C2 Vendor-Defined message to the IOH
5. The IOH responds to Go_C2 by multicasting a NcMsgB-PMReq(S1) message to the CPUs
6. The CPUs respond by acknowledging the NcMsgB-PMReq(S1) message
7. The IOH responds to the NcMsgB-PMReq(S1)-Ack from the CPUs by sending the Ack_C2 Vendor_Defined message to the Legacy Bridge
8. The IOH and/or ICH may transition the ESI link to L0s autonomously from this sequence when their respective active-state L0s entry timers expire

10.5.1.2 S1 -> S0 Transition

1. The ICH detects a break event, for example, Interrupt, PBE and so on.
2. The ICH generates the Go_S0 Vendor_Defined message to the IOH
3. In response to reception of Go_S0, the IOH multicasts a NcMsgB-PMReq(S0) message to the CPUs

4. After receiving responses to the NcMsgB-PMReqs, the IOH sends the Ack_C0 Vendor_Defined message to the ICH

10.5.1.3 S0 -> S4/S5 Transition

In the S3 sleep state, system context is maintained in memory. In S3-Hot, the power may remain enabled except for the processor cores and Intel QuickPath Interconnect (note that the PWRGOOD signal stays active). The IOH/ICH ESI link and all standard PCI Express links will transition to L3 Ready prior to power being removed, which then places the link in L3. In S3-Hot, the link will transition to L3 Ready and remain in this state until reset asserts and then de-asserts, since power is not removed.

Refer to Figure 10-3, "ICH Timing Diagram for S4,S5 Transition" on page 162 for the general interaction between the IOH Chipset and the ICH.

Figure 10-3. ICH Timing Diagram for S4,S5 Transition

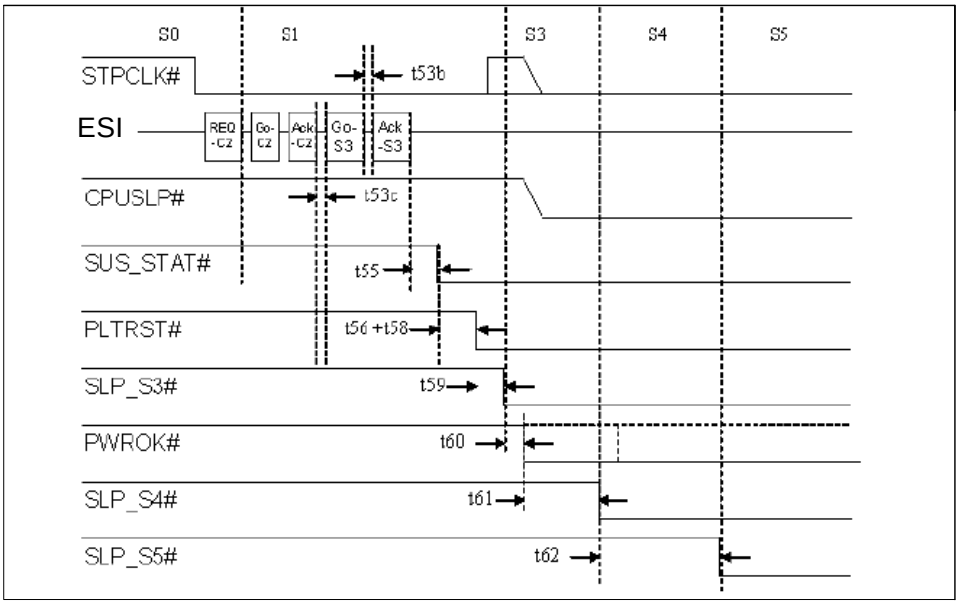

Refer to the Chapter 14 for the normal hard reset sequence that places the system back into S0.

10.6 PCI Express Interface Power Management Support

The IOH supports the following link states:

- L0s as receiver and transmitter
- L1 link state
- L3 link state
- MSI or GPE event on power manage events internally generated (on a PCI Express port hot-plug event) or received from PCI Express
- D0 and D3 hot states on a PCI Express port

- Wake from D3hot on a hot-plug event at a PCI Express port

The IOH does *not* support the following link states:

- ASPM L1 link state
- L1a link state (L1a is supported on ESI)
- L2 link state (that is, no auxiliary power to the IOH)
- Inband beacon message on PCI Express

10.6.1 Power Management Messages

When the IOH receives PM_PME messages on its PCI Express ports (including any internally generated PM_PME messages on a hot-plug event at a root port), it either propagates it to the ICH over the ESI link as an Assert/Deassert_PMEGPE message or generates an MSI interrupt. If 'Enable ACPI mode for PM' in the Miscellaneous Control and Status Register (MISCCTRLSTS) is set, GPE messages are used for conveying PM events on PCI Express, else MSI mode is selected.

The rules for GPE messages are the similar to the standard PCI Express rules for Assert_INTx and Deassert_INTx:

- Conceptually, the Assert_PMEGPE and Deassert_PMEGPE message pair constitutes a "virtual wire" conveying the logical state of a PME signal.
- When the logical state of the PME virtual wire changes on a PCI Express port, the IOH communicates this change to the ICH using the appropriate Assert_PMEGPE or Deassert_PMEGPE messages. Note: Duplicate Assert_PMEGPE and Deassert_PMEGPE messages have no affect, but are not errors.
- The IOH tracks the state of the virtual wire on each port independently and present a "collapsed" version (Wire-OR'ed) of the virtual wires to the ICH.

Note: Refer to Chapter 8, "Interrupts" for details on how these messages are routed to the ICH over Intel QuickPath Interconnect.

10.7 Other Power Management Features

10.7.1 Fine-Grained Dynamic Clock Gating

The IOH employs a traditional leaf-level clock-enable to clock-gate re-synthesis scheme.

10.7.2 Core Power Domains

- Intel ME: always "up"
- x16 PCIe link and protocol layers
- Everything else: shut down in standby.

10.7.3 L0s on Intel QuickPath Interconnect and PCIe

- Initiated by sender occasionally.
- Expecting very short exit latency target.

10.7.4 L1 on Intel QuickPath Interconnect and PCIe

L1 can also be used to save power during S1. On Intel QuickPath Interconnect, IOH needs to “wake-up-and-train” the link before propagating the S1-exit-to-S0 power-control message.

10.7.5 Static Clock Gating

Turn off clocks to subsystems that are disabled.

§

11 Partitioning

11.1 Partitioning Overview

Partitioning allows a system to be divided into multiple virtual machines capable of running their own operating systems and applications. Multiple partitions can exist within a system, each of which is logically isolated from the other, providing different degrees of reliability and security depending on the particular type of partitioning. In all partitioning schemes, partitions are isolated from the OS and applications perspective. Partitioning can be static or dynamic. With static partitioning, the system is partitioned at boot time and re-partitioning requires reboot of the affected partitions. The partitioning is dynamic if resources can be added or removed from a partition without the need to reboot the system or the unaffected partitions. The IOH supports dynamic partitioning. Partitioning in the following sections is always assumed to be dynamic, unless otherwise stated. Dynamic partitioning requires additional OS support to add or remove resources from a virtual machine.

The granularity at which resources can be added to or deleted from a partition is referred to as a “module”. The modules supported are dependent on the platform and partitioning technology. The partitioning could be coarse, where the module may be a field replaceable unit (FRU); or partitioning could be fine, at the level of individual I/O devices, CPU sockets, or CPU cores. On-line addition and deletion of a module from a running partition requires OS support. A module may be comprised of CPUs only, memory (+ memory controller), IO Hub, or some combination of the preceding, depending on the particular implementation and platform configuration. Partitioning control is done through system service processor(s) (SSPs), baseboard management controllers (BMCs) and/or protected firmware running on the processor(s).

Benefits of partitioning include:

- **Consolidation**: A single powerful system running different operating systems and applications, capable of managing multiple independent physical computers in the system.
- **RAS**: Improved availability as faults are isolated to individual partitions. Resources can be re-assigned to different partitions without rebooting the platform and potential minimization of system down time.
- **Development/validation environment**: New hardware and software updates can be tested in an isolated partition prior the migration to the system.
- **Gradual rebalance of resources:** Dynamic partitioning with hot-add and hot-remove will allow hardware resources to be moved between partitions to optimize for the computer workloads. Dynamic partitioning also allows creation of more partitions or deletion of existing partitions without re-booting. This helps optimize the resources for the expected load.

11.1.1 Types of Partitioning

Two types of partitioning supported by the IOH are described in this section: Hard, and Virtual partitioning. Generally there are two opposing requirements for partitioning: Isolation and Flexibility.

— **Isolation:** Refers to how well a partition is isolated from others. Greater isolation means better RAS – A failed partition cannot affect the operation of

another partition. Better isolation requires fewer shared components/hardware between partitions, and minimal software dependence.

— **Flexibility:** Refers to the granularity of hardware resources that can be assigned to or removed from a partition, and flexibility refers to how freely one can allocate and share hardware resources between different partitions. Better granularity and flexibility requires more (finer) partitions and shared hardware/ software across partitions, and greater dependence on software to configure the partitions. Techniques that can get more flexibility tend to reduce isolation.

In general, the more flexible of the partitioning, the less the isolation. The relationship between partition type and the isolation/flexibility is illustrated in Figure 11-1.

Figure 11-1. Partition Type and Isolation/Flexibility Chart

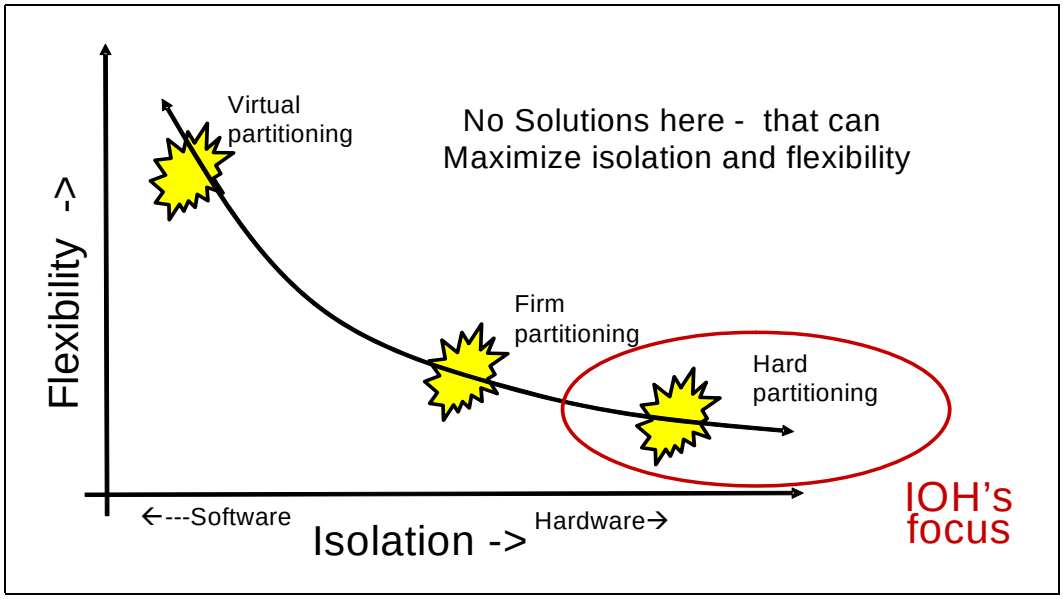

The characteristics for each type of partition are described below:

- **Hard partitioning**
  - — Minimum granularity is at component level, for example, hardware components in the platform (CPU or chipset) are not shared across two or more partitions and any component is allocated to just one partition.
  - — Only buses and links between components cross partition boundaries, and those will be disabled or inactive. Transactions are isolated to components assigned to the partition by disabling the links crossing partition boundaries.
  - — Hardware errors in components and links are isolated to a partition at worst, and will not affect multiple partitions.
  - — Even firmware cannot distinguish hard partition from full system once the links that cross the partition are disabled and partition is re-booted.

Hard partitioning provides the highest level of partition isolation, but limited granularity and flexibility. Maximum number of hard partitions supported in the IOH is the minimum of (Number of processors, Number of IOH, Number of legacy devices). The granularity may be even lower and at the FRU level (multiple components on a single board) and fixed by the system/platform architecture. Partitioning configurations may be further restricted (for example, it may not be possible to combine any IOH or IO devices with any processors to form a partition). Hard partitioning requires more components and may increase the hardware cost of the platform. Hard partitioning is more suitable for larger platforms that support the highest RAS features.

- **Virtual partitioning**
  - Most of hardware is shared across partitions, with hardware firewalls used when hardware is switched from one partition to the other.
  - Partition boundaries may not physically exist at any given instant and may depend more on the context switches so that hardware is assigned to different partitions at different times. The granularity may be individual processor threads and IO devices OR even those may be shared across partitions.
  - Virtual partitioning requires a software layer called Virtual Machine Monitor (VMM) below the operating system. VMM is aware of partitions and resources shared across partitions. VMM manages the hardware and uses the mechanisms provided by hardware to assign/protect OS/applications of one partition from the other.

Virtual partitioning provides the least isolation as it requires most of the hardware and even VMM software to be shared by different partitions, but provides the greatest flexibility in configuring partitions. Virtual partitioning can create more partitions than the number of processors and IO devices in the system. Unlike hard partitioning, virtual partitioning does not require any specific hardware support and can be entirely supported by the software. However, isolation and performance can be improved by appropriate hardware mechanisms in processor and chipsets. Virtual partitioning is suited primarily for consolidation and balancing of resources across partitions to improve platform efficiency.

Both processor and IOH provide hardware mechanisms to support virtual partitioning. The IOH includes an address translation table which allows virtualization of the IO devices.

11.1.2 Configuration of Partition – Static & Dynamic

Another main attribute of partitioning is the impact of changing partitioning configuration. The partitioning can be either static or dynamic.

Static Partitioning requires an operator to stop all CPU activities and shut down the system first, then take the steps to reconfigure the system. Reconfiguration is achieved either by manually changing the strap pins, or by outband agent configuring the partition CSRs of the chipset. Once the strap pins and CSRs are configured properly, a system wide reboot is issued. Upon reboot, the new configuration takes effect, and the system operates either in a single partition, or in multiple independent partitions. The benefit of static partitioning is its simplicity, but the drawback is the requirement to shut down the system.

- Benefit of Static Partitioning is its simplicity:
  - Requires no OS support
  - Requires little or no firmware support
  - Requires little BMC support
- Disadvantages of Static Partitioning are:
  - Requires halting all CPU activities and perform shutdown sequence
  - May require operator to manually change switches/straps for the new configuration
  - Requires system-wide reset to establish the new configuration

Dynamic partitioning differs from static partitioning in that reconfiguration of the system does not require the system to reboot. Consequently, dynamic partitioning allows the system to continue to operate while the system reconfiguration is in

progress. This is achieved through the hot add/remove (also termed as hot-plug/remove) of modules. With hot add/remove support, components can be taken off-line from one partition by the hot remove operation, and later inserted to a different partition by the hot add operation. No physical addition or removal of the component actually takes place. In general, the out-of-band system manager (BMC) coordinates with the CPUs to perform these operations. BMC configures the CSRs in various components, and generates hot-plug interrupts to notify the system of the hot add/remove requests. Upon receiving the hot-plug interrupt, the CPU performs the standard hot-plug operation and incorporates the new resources for merging, or removing the resources from its partition. The benefit of dynamic partitioning is the absence of rebooting the system. CPU in one partition can continue to operate, while the another partition is being created or merged. However, dynamic petitioning flow is significantly more sophisticated and requires substantial software and BMC support.

- Benefits of Dynamic Partitioning is partition/merge without shutting down the system:
  - Support through the hot-plug/remove flows of PCIe and Intel QuickPath Interconnect
- Disadvantage of Dynamic Partitioning is:
  - Dynamic flow is significantly more complex than static
  - Hot add/remove of CPU or IOH node requires sophisticated software and BMC support

Dynamic partitioning flow is detailed in the Common Platform Firmware Specification.

11.2 Hard Partitioning

An IOH system can be hard partitioned into independent domains. This implies each partition contains a full set of hardware resources such that an operating system cannot distinguish between a partition and an unpartitioned system. The partitions do not share the interconnect fabric or hardware resources between them. This requires that the individual domain is constructed with separate hardware. Interactions between different partitions are minimized so that hardware or software failures in one partition do not affect other partitions in the system. Partition isolation is enhanced by disabling the links between the partitions. The primary driver for the hard partition model is to enable system consolidation and to avoid single points of failure.

Figure 11-2. Example of Hard Partitioning

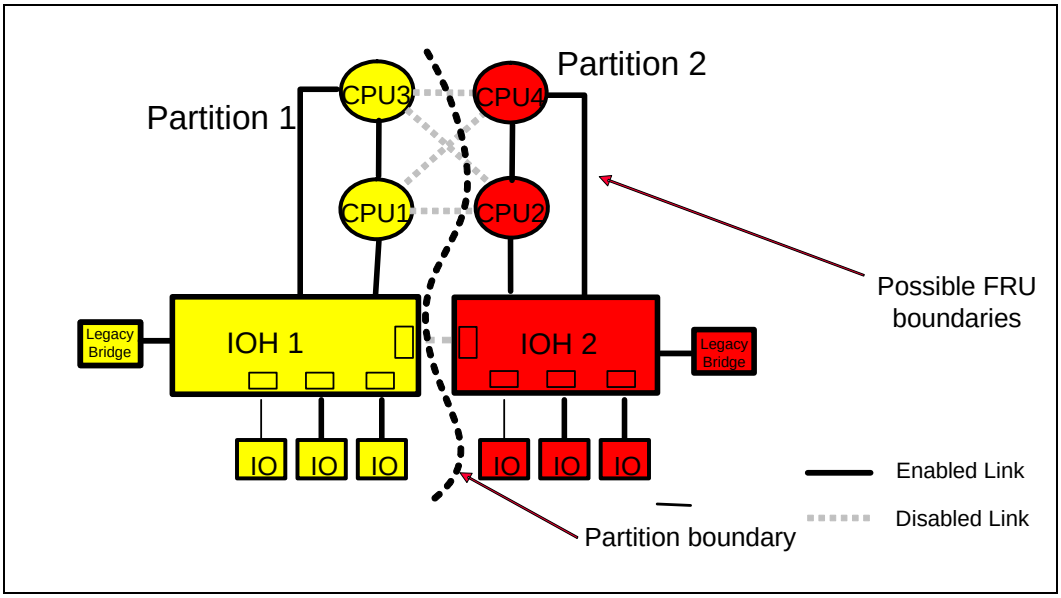

Figure 11-2 shows an example of IOH hard partitioning. In this example of a 4-CPU system, the hardware resources are evenly divided into two partitions at component granularity (for example, no component can belong to two different partitions). The legacy devices and FWH are also replicated for each partition. Hard partitioning has the following features:

- **Isolation – guaranteed by hardware**
  - Each partition is able to reset and boot without affecting the other
  - Errors/faults are contained within the partition
  - Each partition sees its own address space and system resources. System resources between partitions are not shared.
- **Serviceability – minimal impact to up-time**
  - Partitions can be brought down for service independently (for example, to replace faulty parts)
  - System can hot-add and remove parts within a partition, or hot-add and remove the entire partition
- **Flexibility – dynamically reconfigure partitions**
  - Split/merge partition via firmware support
  - Add/remove resources to a partition via hot add/remove
- **Hard Partition Support by the IOH**
  - Link disabled/isolation to divide system into partitions
  - Partition reset isolation – ability to reset/re-boot components in a given hard partition

11.2.1 Hard Partitioning Topologies

A system can be hard partitioned into independent domains. These domains do not share the interconnect fabric nor hardware components between them. Since the domains do not share the interconnects, some dynamic partitioning rules apply in a

hard partition system. Figure 11-3 illustrates an example of an invalid hard partition reconfiguration. In this example the system decides to re-allocate two yellow CPUs to the red partition. However, when the system hot-removes the left CPUs, it also cuts off the Intel® QuickPath Interconnect path of the right yellow CPU to the legacy bridge causing system failure. As a rule, hot remove of a CPU for hard partitioning must not cut off the Intel® QuickPath Interconnect path to a legacy IOH. This rule together with other rules are stated in the subsequent section.

Figure 11-3. Example of Dynamic Hard Partitioning Violation

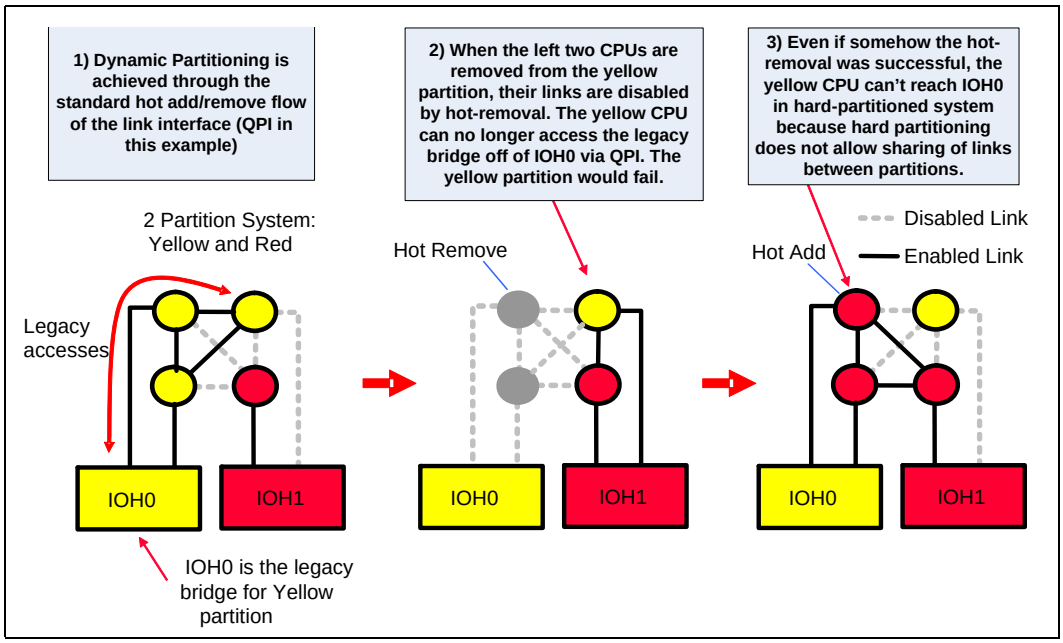

11.2.1.1 Hard Partitioning Topology Rules

The following lists the hard partitioning topology rules.

1. Hot removal of a CPU for partitioning must not cut off the Intel QuickPath Interconnect path to the legacy IOH of an active CPU (see Figure 11-3)
2. At least one of the IOH(s) in the partition must be connected to a CPU in the same partition by the Intel QuickPath Interconnect. If none of the IOHs are connected to the Intel QuickPath Interconnect fabric, then there is no way for IO to reach the CPUs as the CPU does not have PCIe links.
3. It is not necessary for all CPUs in a partition to connect to an IOH as long as the rules above are satisfied.

   CPUs support routing Intel QuickPath Interconnect traffic through them and have built-in routers. A CPU not connected to an IOH can route its traffic through other CPUs. There must be a path as all CPUs are connected in the Intel QuickPath Interconnect and at least one IOH that is connected to the Intel QuickPath Interconnect fabric.

4. All links between components assigned to different partitions are disabled.
5. There is no memory or I/O sharing between two hard partitions.

Generally a partition may consist of one or more FRUs (Field Replaceable Unit). An FRU is a minimum unit of hardware that is replaceable in the platform. the IOH expects that any FRU will belong to the same partition. Therefore, replacing a faulty FRU unit would have minimal impact to the system and only affects that partition (although the partition may have to be shut down). It is also possible to service a faulty FRU without affecting any partition if the FRU can be hot removed without having to shutdown the partition using that FRU.

The following figures illustrate different hard partitioning examples adhering to the rules above.

11.2.1.2 Hard Partitioning in 2 IOH Configurations

The following figures illustrate different examples of 2 IOH hard partitioned topologies. Figure 11-4 shows an example of how hard partitioning can be applied in a 2-CPU system.

Figure 11-4. Examples of Hard Partitioning in 2-CPU Systems

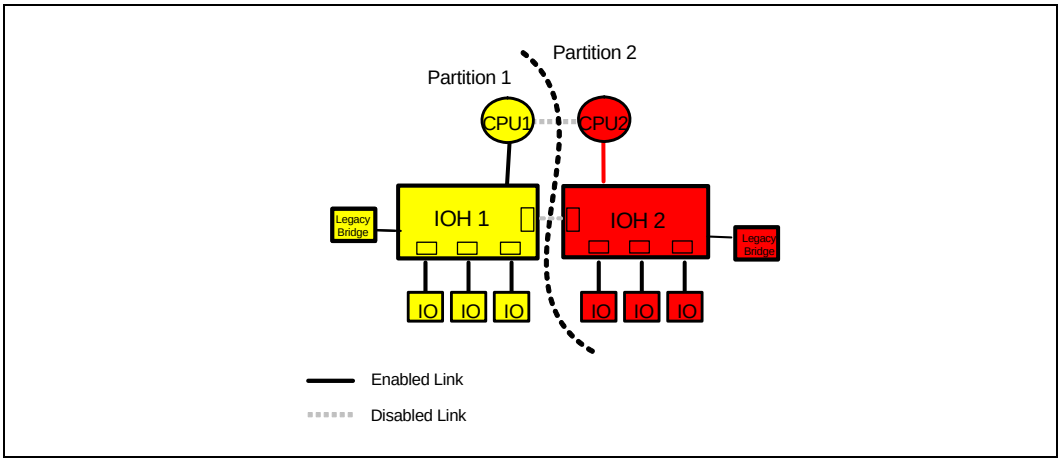

Figure 11-5 shows two examples of hard partitioning in a 4-CPU system. For example, if CPUs are grouped with IOH1 to form partition 1, then the remaining CPUs can be grouped with IOH2 to form partition 2.

Figure 11-5. Examples of Hard Partitioning in Topology 4-2-F (4 CPU, 2 IOH)

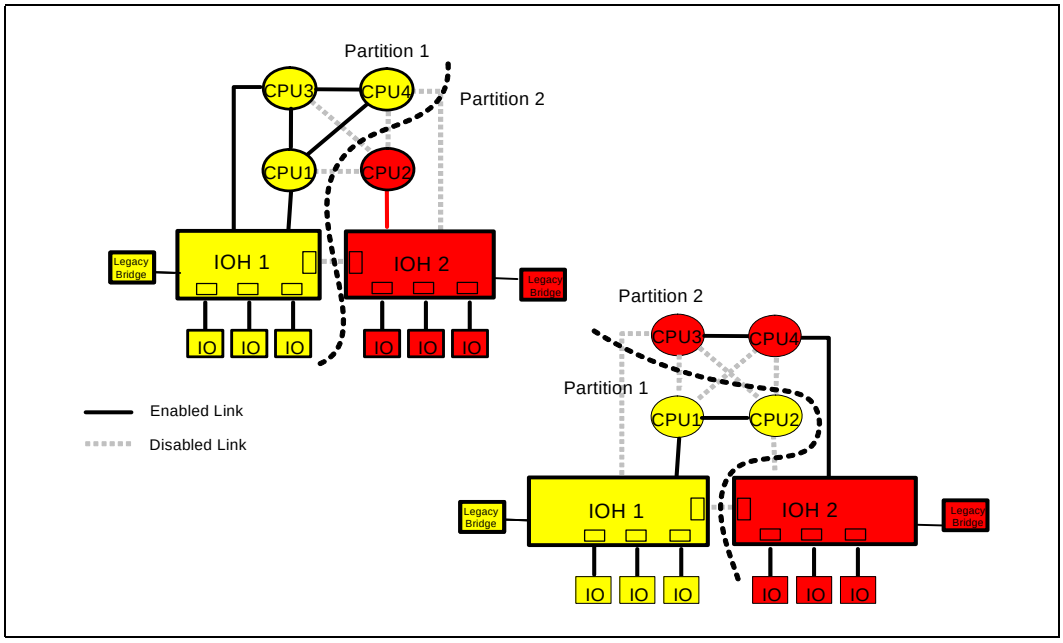

Figure 11-6 shows all legal hard partitioning in a 2-CPU and 4-CPU systems. Note that configurations that creates minimal hops between CPU and IOH is preferred. For example, the first configuration in the 2-CPU, and the first and second configurations in the 4-CPU.

Figure 11-6. Legal Hard Partitioning

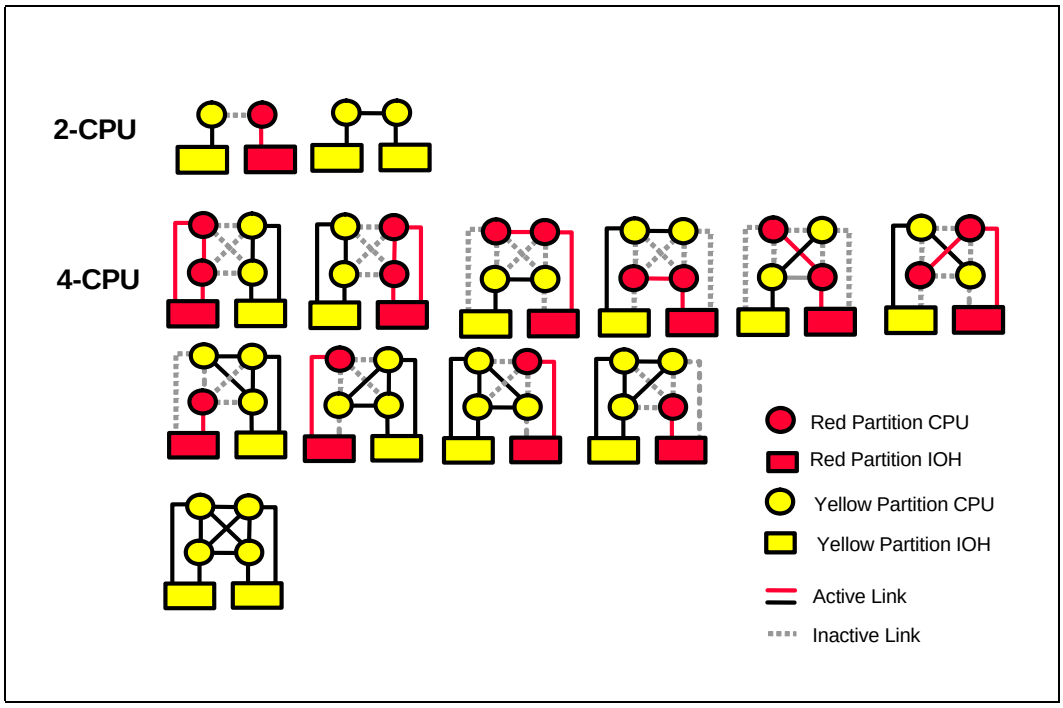

11.3 Virtual Partitioning

An IOH component must entirely belong to a single partition. Virtual partitioning is supported through software, however IOH provides Extended Intel VT-d technology that allows I/O device virtualization. Please refer to the virtualization chapter for more details.

11.4 Hard Partition System Address Model

The system address model for the hard partition is identical to a system without partitioning. Each partition sees its own independent address space and system resources. There is no sharing of address space between partitions.

11.5 IOH Partitioning Support

This section describes the hardware features supported by the IOH for hard partitioning. The main requirement for the partitioning support is the ability to recognize transactions from different partitions and isolate them to the resources in their respective partitions. Traffic in one partition should never go to the resources in another partition. For hard partitioning, most of the hardware requirements are platform related and have little impact to the IOH. These mechanisms are detailed in the subsequent sections:

- **Partition Isolation:** IOH partition isolation is achieved through the Intel QuickPath Interconnect NodeID-based routing, and disabling Intel QuickPath Interconnect links at the partition boundary. A transaction targeting a specific node (belonging to a specific partition) is routed to the target based on the NodeID. The target NodeID is generated by the requesting component through the lookup of the source address decoder. By providing the proper programming of the source decoders, the address referenced by a CPU or IOH can only be directed to a component within its partition. In addition, the Intel QuickPath Interconnect links at the partition boundary can be electrically disabled to further isolate hard partitions. Therefore, partition isolation is achieved through the standard Intel QuickPath Interconnect functionality of the source address decoder and disabling of Intel QuickPath Interconnect ports. IOH provides no special hardware support for partitioning management.
- **Partition management:** IOH partitioning is managed by the BMC through the console interface. An operator can convey the desired partition topology to the BMC. The BMC conducts the programming of the NodeIDs of the components and the disabling/enabling of the Intel QuickPath Interconnect interface. Firmware then coordinates with BMC to provide proper programming of the source address decoders. The programmability of the NodeIDs and the Intel QuickPath Interconnect interface are parts of the standard Intel QuickPath Interconnect support. IOH provides no special hardware support for partitioning management.
- **Partition Reset:** Hard partition reset initializes all components within the partition to their reset default state. Since hard partitioning guarantees hardware isolation by disabling the links between the partition boundaries, a hard reset can be applied to a partition as if it were an independent machine. The partition reset is isolated within a partition. Resetting one partition does not affect functions of another partition. Partition reset could be generated by software with CF9 write to the active ICH in the partition, or any other reset source to the active ICH. These events will eventually cause the assertion of the PLTRST# reset output in the ICH. When this occurs, ICH puts itself in the reset state, and the assertion of PLTRST# can be used to drive partition reset. Platform hardware is responsible for driving

partition specific resets and in particular must account for the change in reset routing during partition transitions.

11.5.1 Considerations for Multiple ICHs in a Partition

Domain partitions that contain multiple ICHs must only have one active ICH within that partition. Each partition must have one designated legacy IOH where the active ICH must be connected via the ESI port. Any ICH connected to a non-legacy IOH must be at a minimum disabled by holding it in a reset state by inhibiting the VRMPWRGOOD signal while the POWROK signal performs its normal sequence. The IOH Strapping configuration for non-legacy IOH with a disabled ICH connected to the ESI port should be as follows: LEGACYIOH = 0, FWAGNT_ESIMODE = 0.

§

12 Scalable Systems

12.1 Introduction

This chapter will describe the requirements and limitations of systems above four sockets.

12.2 Intel QuickPath Interconnect Standard and Extended Headers

The IOH will support a maximum 5-bit NodeID with standard headers, and 6-bit NodeID with extended headers, which limits it to 32 or 64 NodeIDs. When more than this limit of NodeIDs is required in a system, a node controller must be used as a proxy for the additional agents. Figure 12-1 shows an example of an 8 socket system configuration with node controllers.

Figure 12-1. Example NodeID Assignment for 2-Cluster System with 4S Clusters

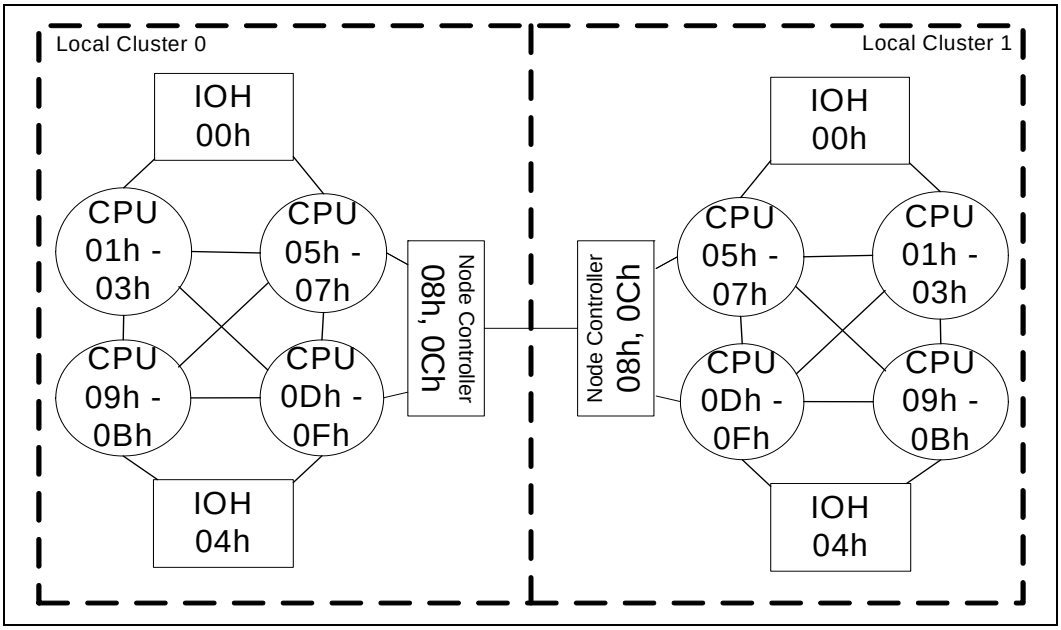

12.3 Broadcast from IOH

12.3.1 Coherent

Source broadcasting snoops use either a 32-entry or 64-entry broadcast vector, corresponding to a 5-bit or 6-bit NodeID limit for standard or extended headers, respectively. A hierarchical bridge (OEM component) within the local cluster can be used to manage coherency of non-local clusters.

The other option for dealing with coherency is to switch to a home node based scheme. In this scheme, source broadcast is turned off and the home agent will ensure coherency. This could be done by home node broadcast or by a directory based flow.

12.3.2 Non-Coherent (IA-32 Only)

IA-32 interrupts may broadcast to other caching agents. The broadcast vector within the IOH only targets 32 or 64 NodeIDs. Any broadcast outside the local cluster requires a hierarchical controller to send the requests to other agents.

Note: Physical APICID mode targets one NodeID such that broadcast is not required. All interrupts will be directed to either a local socket or the node controller.

12.3.3 Lock Arbiter (IA-32 Only)

IOH supports the outbound locks in IA-32. This requires a “Lock Arbiter” to arbitrate in the case of multiple agents. IOH has implemented a “Lock Arbiter” with an arbitration queue of 8 deep, which limits its scaling to 8 lock sources. This will equate to 8 sockets for the Intel Xeon processor 7500 series.

When scaling beyond 8 lock sources there are two options: (1) use a OEM “Lock Arbiter” that can support more than 8 sources, or (2) use a hierarchical controller to queue requests from remote clusters to ensure the IOH “Lock Arbiter” does not receive more the 8 simultaneous requests.

The “Lock Arbiter” in IOH can only support broadcast to the local cluster via a 32-entry or 64-entry broadcast vector. Beyond the 6-bit NodeID targets, a hierarchical controller must act as a proxy to remote clusters.

12.3.4 Quiesce Master

Quiesce Master functionality exists in the IOH which will quiesce all agents in the quiesce list. This list can only target 64 agents with a 6-bit NodeID. Software controls the initiation and completion of this flow via configuration registers within the IOH. In some systems the target lists will be both CPU and IOH. In others it may include only the IOH, and each CPU will be quiesced via its own configuration register.

In a hierarchical system there are two options for handling this flow: (1) the Node Controllers could forward the broadcast of StopReq*/StartReq* to each cluster, and ensure that completion is only given to the Quiesce Master after each of the remote cluster has completed each phase, or (2) software could control quiesce independently in each of the clusters, thus removing the need for node controller involvement.

12.4 Source Address Decoder

The source address decoder in the IOH will support 16 decoder entries for memory space (DRAM and MMIOL/H). Each entry has the ability to do a low-order interleave across 8 NodeIDs.

The source address decode methodology leads to flat scaling limitations. The more home agents that exist, the more regularity required in the memory population to fit them within the 16 entry limit. There is also a strict limit on the number of targets the I/O decoder can target. For LocalxAPIC and Legacy I/O, only 8 NodeIDs can be targeted directly, which limits the flat system to 8 IOHs and 8 sockets. Scaling beyond this requires a hierarchical Node controller to decode outside of the local cluster.

Scaling with a hierarchical controller is limited by the I/O decoder’s ability to divide its address space because the range is handled by a single decoder. MMIOL and LocalxAPIC have ranges separated into local and remote ranges, where the local range

is interleaved across the target list, and the remote range targets a single NodeID corresponding to the node controller. This method in IOH assumes a maximum of 64 clusters.

Note: The Intel Xeon processor 7500 series Source Address Decoder (SAD) model has similar alignment and interleave constraints to IOH. The Intel Itanium processor 9300 series has a SAD with more restrictive alignment and a 16-way interleave.

12.5 Performance

The IOH queues are sized for 4 socket system latencies achieving peak bandwidth on Intel QuickPath Interconnect and PCI Express for inbound reads and writes to DRAM. Therefore, the larger latencies seen in larger platforms with greater than 4 sockets will result in reduced performance. In hierarchical systems, this problem may be addressed by NUMA software optimizations that direct I/O traffic to local sockets.

12.6 Time-Out

Requirements grow for large system time-outs. IOH provides the ability to program the time-out on requests generated on the Intel QuickPath Interconnect to 43 seconds to meet large system requirements. Special consideration must be taken with PCI Express I/O cards. The current PCI Express specification requires a maximum time-out value of 50 ms, which is below the value necessary for large systems, although extensions have been added to allow growth to 64 sockets. Systems with larger time-out requirements may need non-standard cards to workaround this issue.

12.7 PCI Segments

PCI bus numbering is limited to only 256 buses. The method to extend this is called “PCI Segments”, which is a method to create multiple 256 bus segments in one system.

Requirements for segment support are:

- Peer-to-peer traffic allowed only within a segment
- Segments will be supported on an IOH granularity
- Processor address decode must have the ability to support multiple segments

12.8 Flat System Configurations

Flat system configurations are limited to 32 NodeIDs in standard header mode (5-bit) or 64 NodeIDs in extended header mode (6-bit). In standard header mode this inherently limits their scaling to support a maximum of 8 sockets, where the processor uses 3 NodeIDs each, and the remaining NodeIDs are allocated to the IOH.

The Intel Itanium processor 9300 series uses 5 nodeIDs per socket (4-caching agents, 1 configuration agent). This results in limiting Intel Itanium processor 9300 series-based platforms flat scaling with IOH to only 4S with standard headers or 8S with extended headers.

The home agent limits the number of the requests that each source may send to it. The limit is based on the ability to divide the home tracker among all the sources in the system. Some processors may limit the IOH to only 16 requests per home. If this occurs, then IOH will only be able to utilize 128 of the 256 ORB entries. This will result in a reduction in peak bandwidth from the IOH.

Figure 12-2. 8 Processor Topology Example

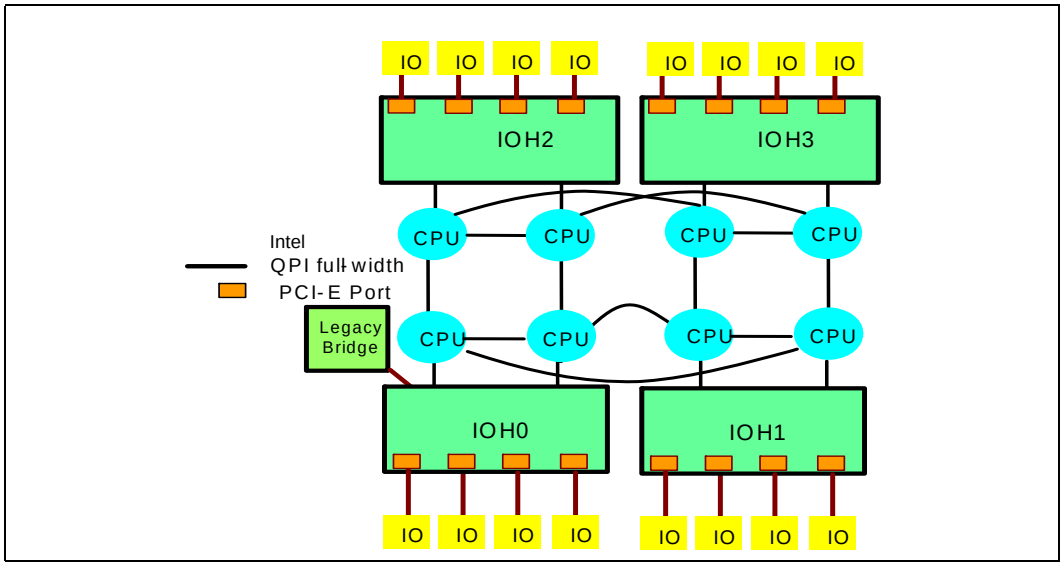

Figure 12-2 is an example configuration that is a "glueless" eight processor platform with four IOH components. Four hard partitions are possible.

Figure 12-3. 8 Processor Topology Example (Intel Itanium Processor 9300 Series-based Platform Only)

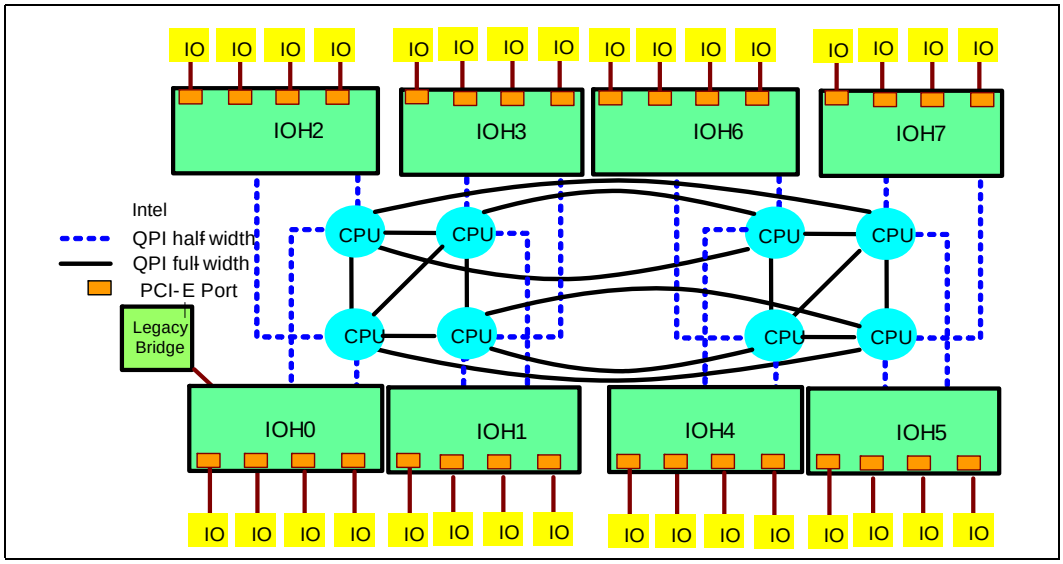

Figure 12-2 is an example configuration that is a "glueless" eight processor platform with eight IOH components. Eight hard partitions are possible. This example is only possible by using the extra Intel QuickPath Interconnect link provided by the Intel Itanium processor 9300 series.

12.9 Hierarchical System Configurations

Hierarchical systems use the basic 2 or 4 socket system building blocks and a "hierarchical controller" that manages coherency outside of that block. The controller could broadcast snoops to other clusters or include a full or partial directory that filters snoops outside of the local cluster. See the example in Figure 12-4. In this system type, the memory controller on the processor can be used without any special directory in the home agent. The CPU only supports 4 Intel QuickPath Interconnect links which limits its configurablity in hierarchical systems. In this example, the cross-CPU Intel QuickPath Interconnect link, shown as a dashed line, could be removed.

Hierarchical system options/requirements:

- Hierarchical controller must do address decode to locate remote cluster and target NodeID within the remote cluster
- Source broadcast snooping may occur within the local cluster, but the hierarchical controller is responsible for all coherency outside of the local cluster
- Non-coherent broadcast requests may be done within the local cluster, but the hierarchical controller is responsible for broadcast in all remote clusters
- When there are more then 8 Lock sources in a system, there are two options: (1) Node Controller implements a lock arbiter, or (2) Node Controller queues locks to ensure the IOH with the Lock arbiter never receives more then 8 simultaneous locks.

Figure 12-4. Hierarchical System Example

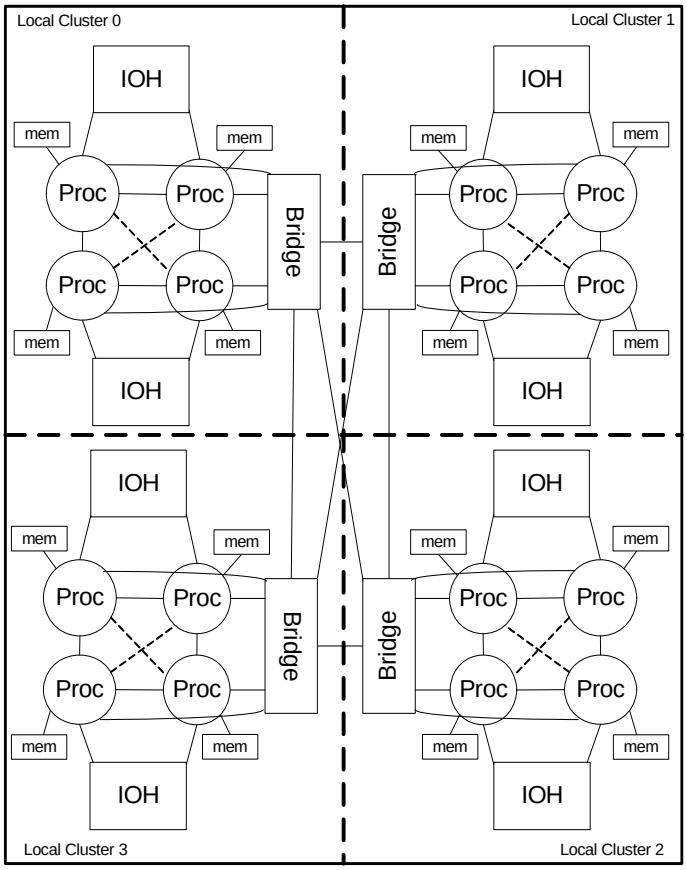

§

13 Intel® Management Engine

This section includes details of the management interfaces for the platform, including the Reduced Media Independent Interface (RMII), and the Control Link (CLink).

13.1 Intel Management Engine Overview

The Intel Xeon processor 7500 series-based platform implements an Intel® Management Engine (Intel® ME) subsystem to provide Intel Server Platform Services (SPS) functionality. One hardware implementation is an optional discrete Baseboard Management Controller (BMC) component which can be used for manageability functions. The BMC allows the user to monitor and log the state of the system by utilizing out-of-band operations to determine the last operating state of the system.

The SPS on the Intel ME functions as satellite controller services to a typical system BMC that OEMs integrate. It does not serve as a standalone complete management solution. Also, at this time, the RMII interface is not planned to be used and as such does not need to be connected to anything. The BMC will handle access to LAN devices, and the ME acts only as satellite functions behind the BMC. Also, it is currently planned to make these services work without requiring discrete DRAM for Intel ME.

13.2 Management Engine External Interaction

This section describes the Intel ME interaction with the other entities in the platform. Although the interface to the other units within the IOH are beyond the scope of this document, this section highlights the software visible elements.

13.2.1 Receive

Intel ME can receive transactions from the CPU (host) and the Controller Link interface (CLINK).

The host accesses the Intel ME through a variety of software interfaces.

13.2.2 Transmit

Intel ME accesses to system memory are subject to Intel VT-d translation accesses.

Table 13-1. Signal Type Definition (Sheet 1 of 2)

Signal	Description
In (I)	Input is a standard input-only signal
Out (O)	Totem Pole Output is a standard active driver
T/S	Tri-State is a bi-directional, tri-state input/output pin
S/T/S	Sustained Tri-State is an active low tri-state signal owned and driven by one and only one agent at a time. The agent that drives an s/t/s pin low must drive it high for at least one clock before letting it float. A new agent cannot start driving an s/t/s signal any sooner than one clock after the previous owner tri-states it.
O/D	Open Drain allows multiple devices to share as a wired-OR

Table 13-1. Signal Type Definition (Sheet 2 of 2)

Signal	Description
A-in	Analog input signals
A-out	Analog output signals
B	Input bias

Figure 13-1. Example of Intel ME Configuration with Intel SPS Implementation

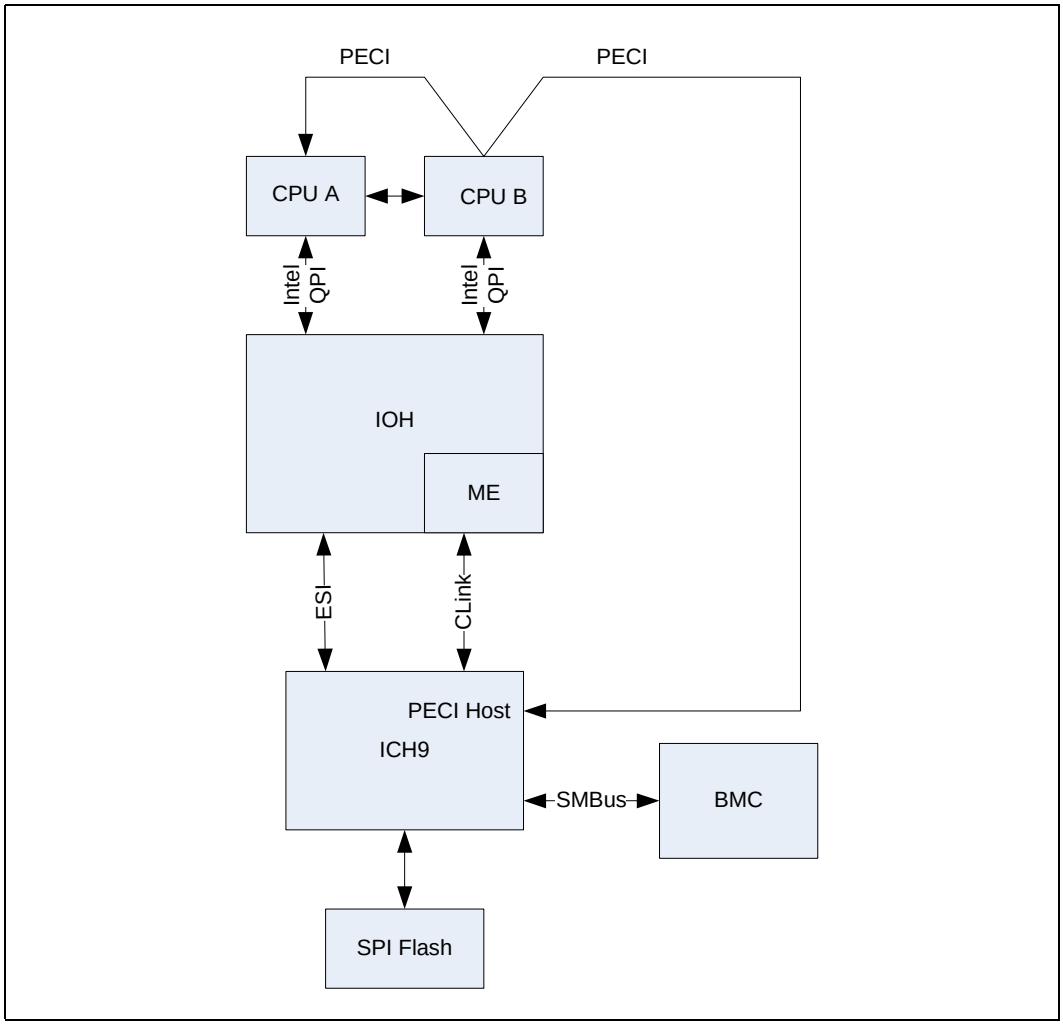

13.3 Controller Link (CLINK)

The Controller Link (CLINK) is the private low pin count, low power communication interface.

Table 13-2 describes the CLINK signal names connected between the IOH and Intel ME.

Table 13-2. Controller Link Interface

Signal Name	Type	Description
CLCLK	I/O	CLINK bi-directional clock
CLDATA	I/O	CLINK bi-directional data
CLRST_N	I	Active-low CLINK reset

13.4 MESW Register

Note: The MESW CSR can only be accessed in the S0 power state. If firmware tries to read or write this CSR when the IOH is in any other S-state, it may cause a hang.

13.4.1 MESW_CBM_OVR_CTRL: Config Busmaster Override Control

Device: 0
Function: 0
Offset: 400800h

Bits	Attributes	Default	Description
31	RW	0h	Override Enable (OVREN): set to 1'b1 to enable override of upstream transaction from Config Bus interface with CSR fields. This bit controls bits[23:16] and bits[6:0] of this register.
30:25	RO	0h	Reserved (RSVD): Reserved
24	RW	0h	MSI Enable (MSI_EN):set to generate an upstream MSI transaction via the CBM override mechanism. Note that {FMT, TYPE} should be set to {2'b10, 5'b0_0000} (Memory Write) for MSI transactions.
23:16	RW	0h	Message Code (MC): Specifies MsgCode[7:0] for message request.
15:8	RW	0h	Target Bus Number (TGTBUSNO): Specifies target bus number. This field will always be included in upstream config requests.
7	RW	0h	Config Type (CT): Indicates config request as config type 0 (1'b0) or config type 1 (1'b1).

Device: 0 Function: 0 Offset: 400800h			
Bits	**Attributes**	**Default**	**Description**
6:5	RW	0h	Format (FMT): Specifies transaction format together with TYPE[4:0]. The encodings for valid {FMT[1:0], TYPE[4:0]} are: {2b'00, 5b'0_0000}: Memory Read {2b'01, 5b'0_0000}: Memory Read with 64 bit extended address {2b'00, 5b'0_0001}: Reserved {2b'01, 5b'0_0001}:Reserved {2b'10, 5b'0_0000}: Memory Write {2b'11, 5b'0_0000}: Memory Write with 64 bit extended address {2b'00, 5b'0_0010}: IO Read {2b'10, 5b'0_0010}: IO Write {2b'00, 5b'0_0100}: Reserved {2b'10, 5b'0_0100}: Reserved {2b'00, 5b'0_0101}: Reserved {2b'10, 5b'0_0101}: Reserved {2b'00, 5b'0_1010}: Reserved {2b'10, 5b'0_1010}:Reserved {2b'00, 5b'0_1011}: Reserved {2b'10, 5b'0_1011}: Reserved {2b'01, 5b'1_0R[2:0]}: Message (R[2:0] are as defined in PCIe spec) {2b'11, 5b'1_0R[2:0]}: Message with Data. The data will come from the CCDW write.
4:0	RW	0h	Type (TYPE): This field combined with Format field specifies the transaction type. See the encodings in FMT[1:0] field above.

§

14 Reset

14.1 Introduction

This chapter describes IOH-specific aspects of hardware reset. Subsequent I/O initialization procedures requiring configuration register dialogue are not described in this chapter.

14.1.1 Reset Types

- **Power-Up Reset**

  Power-up reset is a special case of Power Good reset. It consists of energizing the power rails and involves the assertion of the COREPLLPWRDET signal to the IOH.

- **Power Good Reset**

  Power Good reset involves the deassertion of the COREPWRGOOD and AUXPWRGOOD signals, and is part of Power-up reset. Deassertion of COREPWRGOOD and AUXPWRGOOD can happen at any time, and is not necessarily associated with Power-up reset. The Power-Good reset spawns Intel QuickPath Interconnect, ESI, PCI Express, SMBus, and JTAG resets. “Surprise” Power-good reset clears program state, can corrupt memory contents, clears error logs, and so on, and therefore, should only be used as a last resort in extreme lock-up situations.

- **Hard Reset**

  Hard reset involves the assertion of the CORERST_N signal, and is part of both Power-up and Power-Good reset. Hard reset is the “normal” component reset, with relatively shorter latency than either Power-up or Power-Good, particularly in its preservation of “sticky bits” (for example, error logs and power-on configuration (that is, Intel QuickPath Interconnect link initialization packet “4”s). Hard reset preserves hard partitions, and sets the phase on PLL post-dividers. The hard reset spawns Intel QuickPath Interconnect, ESI, PCI Express, and SMBus resets. “Surprise” hard reset clears program state, can corrupt memory contents, etc., and therefore, should only be used as a means to un-hang a system while preserving error logs which might provide a “trail” back to the “fault” that caused the “hang”. When a hard reset is issued via an external tool warm reset and calibration is bypassed via PHCTR, Intel QPI links do not train. This is due to ICOMP and RCOMP not being restarted after an external tool warm reset with calibration bypassed. When Intel QPI calibration is bypassed, a hard reset is not associated with Power-up or Core Powergood reset is not permitted. This may result in the Intel QPI links not training.

- **Intel QuickPath Interconnect PHY Layer Hard and Soft Reset**

  There are two resets in the Intel QuickPath Interconnect PHY layer: hard and soft. Both resets only reset the PHY Layer of the Intel QuickPath Interconnect port. There are individual PHY hard and soft resets for each Intel QuickPath Interconnect port. PHY layer resets are completely orthogonal to Link layer resets. CSR bits with attribute type “P” and “PP” get reset on hard reset. CSR bits with attribute type “PP” get reset on soft reset. Refer to the Intel QuickPath Interconnect Specification for details on the differences and how soft/ hard resets are initiated.

  If an Intel QuickPath Interconnect PHY hard or soft reset occurs when the Link Layer is active, the Link Layer will initiate a Link Layer Retry (LLR) to resend any Flits that were dropped during the PHY Layer reset. The Link and higher layer protocols will resume normal operation when the LLR is complete.

- **Intel QuickPath Interconnect Link Layer Reset**

  There are two resets in the Intel QuickPath Interconnect Link Layer: hard and soft. Both resets only reset the Link Layer of the Intel QuickPath Interconnect port. There are individual link hard and soft resets for each Intel QuickPath Interconnect port. Link Layer resets are completely orthogonal to PHY Layer resets (except under special circumstances defined in the Intel QuickPath Interconnect specification section covering Link Layer Initialization). In the event that a Intel QuickPath Interconnect Link Layer reset occurs while a protocol layer packet is being processed by the Link Layer, the Intel QuickPath Interconnect provides no method for the protocol layer to recover. Therefore, in order to avoid data corruption, a Link Layer reset may only be asserted when the Intel QuickPath Interconnect port is idle. The difference between the Link Layer hard reset and Link Layer soft reset is the following: 1) Link Layer hard reset is initiated by a write to the Intel QuickPath Interconnect specification defined register bit (QPILCL[1]), which takes effect immediately, resulting in link layer re-init which clears all link layer state and resets all CSR bits with attribute type “N”; 2) Link Layer soft reset is initiated by a write to the Intel QuickPath Interconnect specification defined register bit (QPILCL[0]), which takes effect after 512 Intel QuickPath Interconnect core clock (“16UI”) cycles, resulting in link layer re-init, which clears all link layer state and resets all CSR bits with attribute type “NN”.

- **PCI Express Reset**

  PCI Express reset combines a physical-layer reset and a link-layer reset for a PCI Express port. There are individual PCI Express resets for each PCI Express port. It resets the PCI Express port, for first initialization after power-up, exit from a power-off system-management sleep state, or such as a fault that requires an individual reset to un-hang a particular PCI Express port.

- **JTAG Reset**

  JTAG reset resets only the JTAG port. JTAG reset does not reset any state that is observable through any other interface into the component (for example, CSRs, and so on).

- **SMBus Reset**

  SMBus Reset resets only the slave SMBus controller. SMBus reset does not reset any state that is observable through any other interface into the component (for example, CSRs, and so on).

- **Intel® Trusted Execution Technology (MLINK Bus Reset)**

  An MLINK reset resets only the MLINK controller.

- **RMII Bus Reset**

  An RMII reset resets only the RMII controller.

- **Intel® Trusted Execution Technology (Intel® TXT) Reset**

  Intel® Trusted Execution Technology (Intel® TXT) reset is a mechanism that stops the platform due to a security violation. It is a trigger for a HARD reset.

- **CPU Warm Reset (Supported by Intel Xeon processor 7500 series-based platform Only)**

  A CPU can reset the CPUs and only the CPUs by setting the IOH.SYRE.CPURESET bit. System validation uses this feature to quickly initiate tests, averting the aeons

of test time required to navigate through an entire HARD reset. Setting the IOH.SYRE.CPURESET has no effect after LT.SENTER or while LT.SENTER.STS is set.

14.1.2 Reset Triggers

Possible triggers for reset:

- Energize power supplies
- COREPWRGOOD deassertion
- CORERST_N assertion with IOH.SYRE.RSTMSK = 0
- IOH.QPILCL[0]
- IOH.QPILCL[1]
  QPILCL is a standard Intel QuickPath Interconnect control register
- Loss of Received Clock
- Receipt of Link Initialization Packet
- IOH.BCR.SRESET
  BCR is a standard PCI Express control register
- TRST_N assertion or TCK/TMS protocol
- SMBus protocol
- MLRST_N assertion
- AUXPWRGOOD de-assertion
- RMII protocol
- IOH.SYRE.CPURESET

14.1.3 Trigger and Reset Type Association

Table 14-1 indicates Reset Triggers initiate each Reset Type.

Table 14-1. Trigger and Reset Type Association

Reset Trigger	Reset Type
Energize Power Supplies	Power-Up
COREPWRGOOD signal deassertion	Power Good
CORERST_N assertion & IOH.SYRE.HARDEN	Hard
IOH.QPILCL[0] (Link Layer Hard Reset)	Link Intel QuickPath Interconnect
IOH.QPILCL[1] (Link Layer Soft Reset)	
Receipt of Link Initialization Packet	
IOH.BCR.SRESET	PCI Express
TRST_N assertion	JTAG
TCK/TMS protocol	
SMBus protocol	SMBus

Note: Auxiliary power-up, power good, or Hard reset without an equivalent core reset is not allowed.

14.1.4 Domain Behavior

This is how each of the domains is treated during reset:

- Unaffected by reset:
  - PLLs
- Indirectly affected by reset:
  - Strap flip-flops:
    Hold last value sampled before COREPWRGOOD assertion
  - Analog I/O compensation:
    Only triggered by link power-up
- JTAG:
  - Asynchronous COREPWRGOOD deassertion, COREPWRGOOD deasserted, asynchronous TRST_N assertion, TRST_N asserted, or synchronous TCK/TMS protocol navigation to reset state: reset.
- SMBus:
  - Asynchronous COREPWRGOOD deassertion, COREPWRGOOD deasserted, hard reset assertion, or synchronous SMBus reset protocol: reset.
  - Signals are deasserted after hard reset assertion, signals are observable after hard reset deassertion
- Sticky configuration bits:

  Per port, Intel QuickPath Interconnect Link layer bits except QPILCL.1 are sticky when the QPILCL.1 configuration bit is set.

  Per port, Intel QuickPath Interconnect Physical-layer bits except QPIPHCL.1 are sticky with the QPIPHCL.1 configuration bit is set.
  - Asynchronous COREPWRGOOD deassertion, COREPWRGOOD deasserted: defaults.
  - (synchronized CORERST_N assertion or synchronized CORERST_N asserted) while COREPWRGOOD asserted: no-change.
- Tri-state-able outputs:
  - Asynchronous COREPWRGOOD deassertion, COREPWRGOOD deasserted: tri-state.
    Place outputs in tri-state or electrical-disable when COREPWRGOOD is deasserted.
- PCI Express:
  - Asynchronous COREPWRGOOD deassertion, COREPWRGOOD deasserted: Electrical idle and reset
  - COREPWRGOOD asserted, one cycle after synchronized CORERST_N assertion, BCR.SRESET set: link down (one per port)
  - CORERST_N deassertion, BCR.SRESET cleared: initialize, train, link up
- Intel QuickPath Interconnect:
  - See Section 14.1.6.
- ESI:
  - Asynchronous COREPWRGOOD deassertion, COREPWRGOOD deasserted: tri-state and reset.
  - COREPWRGOOD asserted, one cycle after synchronized CORERST_N assertion: link down

— CORERST_N deassertion: initialize, train, link up

— Processor CORERST_N cycle counter extinguished: send ESI.CPU_Reset_Done

14.1.5 Reset Sequences

Reset sequences are specified by a lexical “grammar”:

- “Trigger = trigger_list:”: one or more items from Section 14.1.2, “Reset Triggers” on page 187.
- “{A, B,...}”: Logically “OR”-ed list
- Following the trigger list:

  “Synchronous” indicates synchronous edge-sensitive trigger synchronized to a clock.

  “Synchronized” indicates asynchronous edge-sensitive trigger synchronized to a clock.

  “Asynchronous” indicates level-sensitive trigger asynchronous to any clock.
- “Condition” indicates trigger qualifier.

  Condition must be valid for trigger to be recognized.

A bulleted list of “actions” follow the trigger and condition specifications:

- “->” within bullet: sequential execution.

14.1.5.1 Power-Up

Trigger = energize power supplies and stabilize master clock inputs with COREPWRGOOD deasserted ->

- -> Toggle clock trees.

14.1.5.2 COREPWRGOOD Deasserted

Trigger = COREPWRGOOD deassertion: asynchronous ->.

Condition = Power and master clocks remain stable.

- -> Tri-state other I/O.
- -> Toggle PLL outputs.
- -> Reset I/O Ports.

14.1.5.3 COREPLLPWRDET Assertion

Trigger = COREPLLPWRDET assertion: asynchronous ->

- -> PLLs acquire lock ->.
- -> PCI Express, ESI, and Intel QuickPath Interconnect interfaces complete calibration.

  Calibration is initiated as soon as internal clocks are stable.

14.1.5.4 COREPWRGOOD Assertion

Trigger = COREPWRGOOD assertion: synchronized ->.

Condition = Voltages are within specifications. Master clocks are stable. The TCK signal may be in any state.

- -> Sample straps.

- -> Un-tri-state I/O.
- -> Hold Intel QuickPath Interconnect, PCI Express, ESI links down.

14.1.5.5 Hard Reset Asserted

Trigger = CORERST_N assertion: synchronized ->.

Condition = COREPWRGOOD is asserted.

Consequence = All buffered writes may be dropped.

- -> Protect sticky configuration bits.
- -> Synchronously assert internal asynchronous flip-flop initialization inputs.
- -> Private JTAG chains may be reset.
- -> Reset Intel QuickPath Interconnect, PCI Express and ESI protocol -> Take PCI Express and ESI links down.

14.1.5.6 Hard Reset Deassertion

Trigger = CORERST_N deassertion: synchronized ->.

Condition = COREPWRGOOD is asserted.

Consequence = Inputs from buses tri-stated during reset are masked until it is guaranteed that bus values are electrically and logically valid.

- -> Allow normal operation of sticky configuration bits.
- -> Initialize Intel QuickPath Interconnect, PCI Express and are links -> Engage Intel QuickPath Interconnect, PCI Express and are link training -> Bring Intel QuickPath Interconnect, PCI Express and ESI links up.

14.1.5.7 IOH PCI Express* Reset Asserted

Trigger = BCR.SRESET set: synchronous ->.

- -> Initialize PCI Express protocol -> Take PCI Express link down.

14.1.5.8 IOH PCI Express Reset Deasserted

Trigger = BCR.SRESET cleared: synchronous ->

- -> Initialize PCI Express link -> Engage PCI Express link training -> Bring PCI Express link up.

14.1.5.9 Intel QuickPath Interconnect Link Reset Assertion

Triggers = {IOH.QPILCL[0] (Link Layer Hard Reset) set to ‘1’; IOH.QPILCL[1] (Link Layer Soft Reset) set to ‘1’; Receive Link Training Packet}: synchronous ->

->Take Intel QuickPath Interconnect link to link initialization

14.1.5.10 Intel QuickPath Interconnect Link Reset De-Assertion

There are no persistent Intel QuickPath Interconnect Link Reset sources. The Intel QuickPath Interconnect Link Reset proceeds through link initialization to full Intel QuickPath Interconnect protocol operation upon detection of Intel QuickPath Interconnect Link Reset Assertion.

14.1.5.11 JTAG Reset Assertion

Triggers ={TRST_N assertion: asynchronous; TMS asserted for five TCK rising edges: synchronous}
->.

- -> Initialize JTAG.

14.1.5.12 JTAG Reset Deassertion

Trigger = TRST_N deassertion: asynchronous ->.

- -> Release JTAG port and to operate normally.

14.1.5.13 CLINK Reset Assertion (Intel Xeon Processor 7500 Series based Platform Only)

Triggers =CLRST_N assertion: asynchronous ->

- -> Initialize CLINK port.

14.1.5.14 CLINK Reset De-Assertion (Intel Xeon Processor 7500 Series based Platform Only)

Trigger = CLRST_N de-assertion: asynchronous ->

- -> Release CLINK port and to operate normally.

14.1.5.15 SMBus Reset Sequence

Trigger = SMBus: synchronous ->.

- -> Reset SMBus interface.

14.1.5.16 RMII Reset Sequence (Intel Xeon Processor 7500 Series based Platform Only)

Trigger = RMII protocol: synchronous ->

- -> Reset RMII interface

14.1.6 Intel QuickPath Interconnect Reset

The Link Training and Status State Machine (LTSSM) as well as any self test, BIST, or loopback functions in the Intel QuickPath Interconnect link must be built around and compatible with the IOH's reset protocols, which includes core logic, power supply sequencing, and the calibration of other analog circuits such as PCI Express I/O, ESI I/O, and PLLs. Platform determinism is enforced at the CPU socket.

Figure 14-1. Physical Layer Power-Up and Initialization Sequence

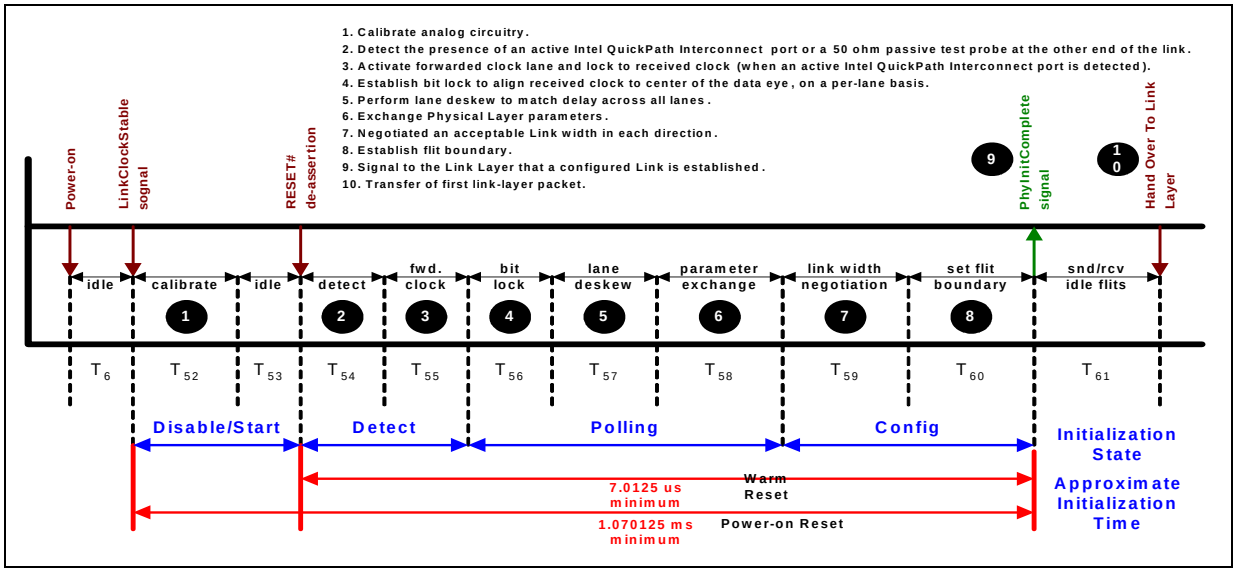

14.1.6.1 Inband Reset

An inband reset mechanism is used for Intel QuickPath Interconnect Soft Reset. The inband reset is initiated by stopping a Forwarded Clock, and detected by observing the absence of an expected Received Clock transition, ultimately resulting in a link failure.

An inband reset is not a power-up link reset. An inband reset is only defined for a link that is up and running. Loss of Forwarded Clock prior to the completion of the first detect state after power-up will not result in an inband reset.

Figure 14-2. Inband Reset Sequence Initiated by Port A to Port B

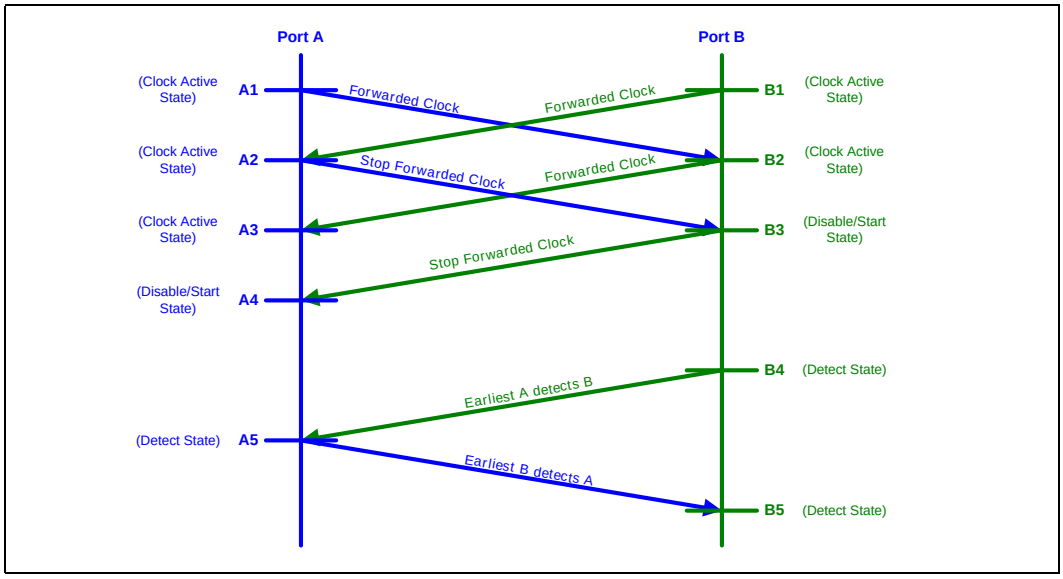

Table 14-2. Intel QuickPath Interconnect Inband Reset Events

Port A	Port B
A1: Port A is in a clock-active state (a state other than Disable/Active or Detect.1). Forwarded Clock is currently being transmitted and/or Received Clock is being received.	**B1:** Port B is in a state other than Disable/Active or Detect.1. Forwarded Clock is currently being transmitted and/or Received Clock is being received.
A2: Port A sends an Inband Reset to Port B by stopping forwarded clock. Simultaneously, Port A stops driving data lanes as well, but Port A receivers continue to observe Received Clock and accepts incoming data.	**B2:** Port B is still in a clock-active state as Inband Reset is in flight. Port B continues to send forwarded clock (and data) to Port A.
A3: This is the same as event **A2**, as Port A continues to observe Received Clock.	**B3:** Port B interprets loss of Received Clock as an Inband Reset. Port B immediately stops driving Forwarded Clock and data lanes. Port B enters the Disable/Start state.
A4: Port A loses Received Clock from Port B. Port A interprets this as an acknowledgement to the Inband reset that it initiated in event **A2**. Port A enters the Disable/Start state.	**B4:** If Calibration is bypassed, Port B allows a minimum period of $T_{INBAND_RESET_INIT}$ to elapse after event **B3** before asserting the *PhyInitBegin* signal, which advances Port B to the Detect.1 state. If Calibration is forced, Port B allows the minimum period of $T_{INBAND_RESET_INIT}$ to elapse after completion of calibration after event **B3** before asserting the *PhyInitBegin* signal and advancing to the Detect.1 state. Upon entering the Detect.1 state, Port B commences the process of detecting Port A. The $T_{INBAND_RESET_INIT}$ parameter is defined to be much longer than the time of flight, so Port A is guaranteed to be in the Disable/Start state by the time Port B advances to the Detect.1 state. This time-out avoids any false detection of Port A (by Port B) when Inband Reset is in flight.
A5: If Calibration is bypassed, Port A allows a minimum period of $T_{INBAND_RESET_INIT}$ to elapse after event **A4** before asserting the *PhyInitBegin* signal, which advances Port A to the Detect.1 state. If Calibration is forced, Port A allows the minimum period of $T_{INBAND_RESET_INIT}$ to elapse after completion of calibration after event **A4** before asserting the *PhyInitBegin* signal and advancing to the Detect.1 state. Upon entering the Detect.1 state, Port A commences the process of detecting Port B, and resumes driving Forwarded Clock after Port B is detected.	**B5:** This is the earliest event in which Port B can detect Port A. When Port B detects Port A, Port B resumes driving Forwarded Clock.

14.2 Platform Signal Routing Diagram

Figure 14-3. Basic Reset Distribution

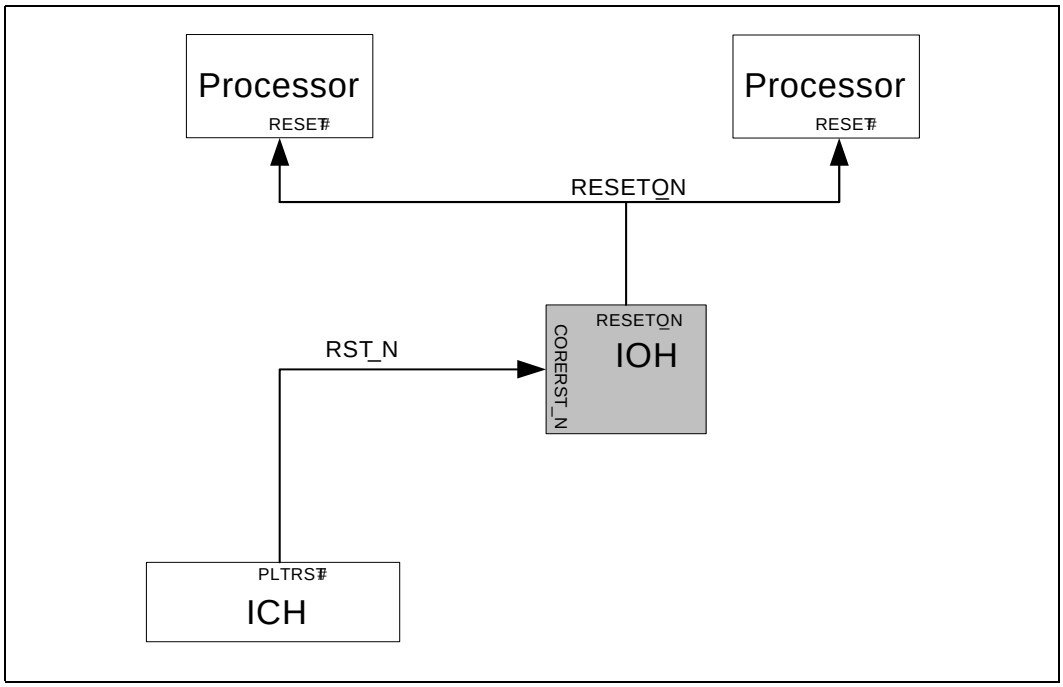

Figure 14-4. Basic MP System Reset Distribution

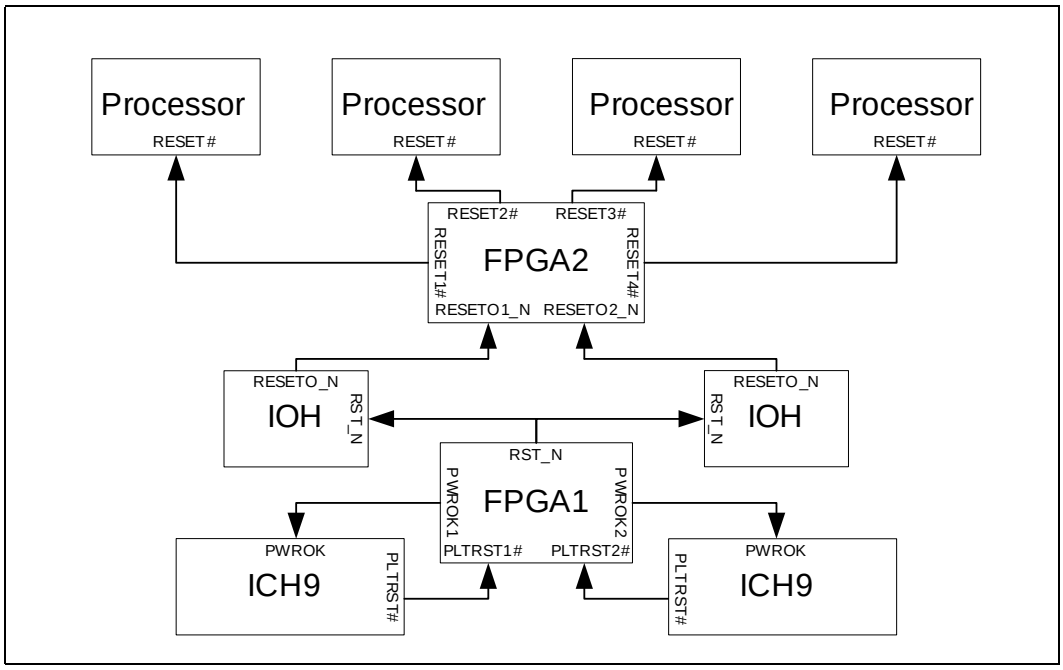

14.3 Platform Timing Diagrams

The following diagrams represent platform reset timing sequences without BMC presence. With a BMC:

- Intel QuickPath Interconnect link initialization may stall indefinitely between:
  - Completion of physical initialization, and
  - Transfer of the first outbound link initialization packet.
    Stall is not allowed if the Physical layer was initialized but the Link layer was not.

Figure 14-5. Power-Up (example)

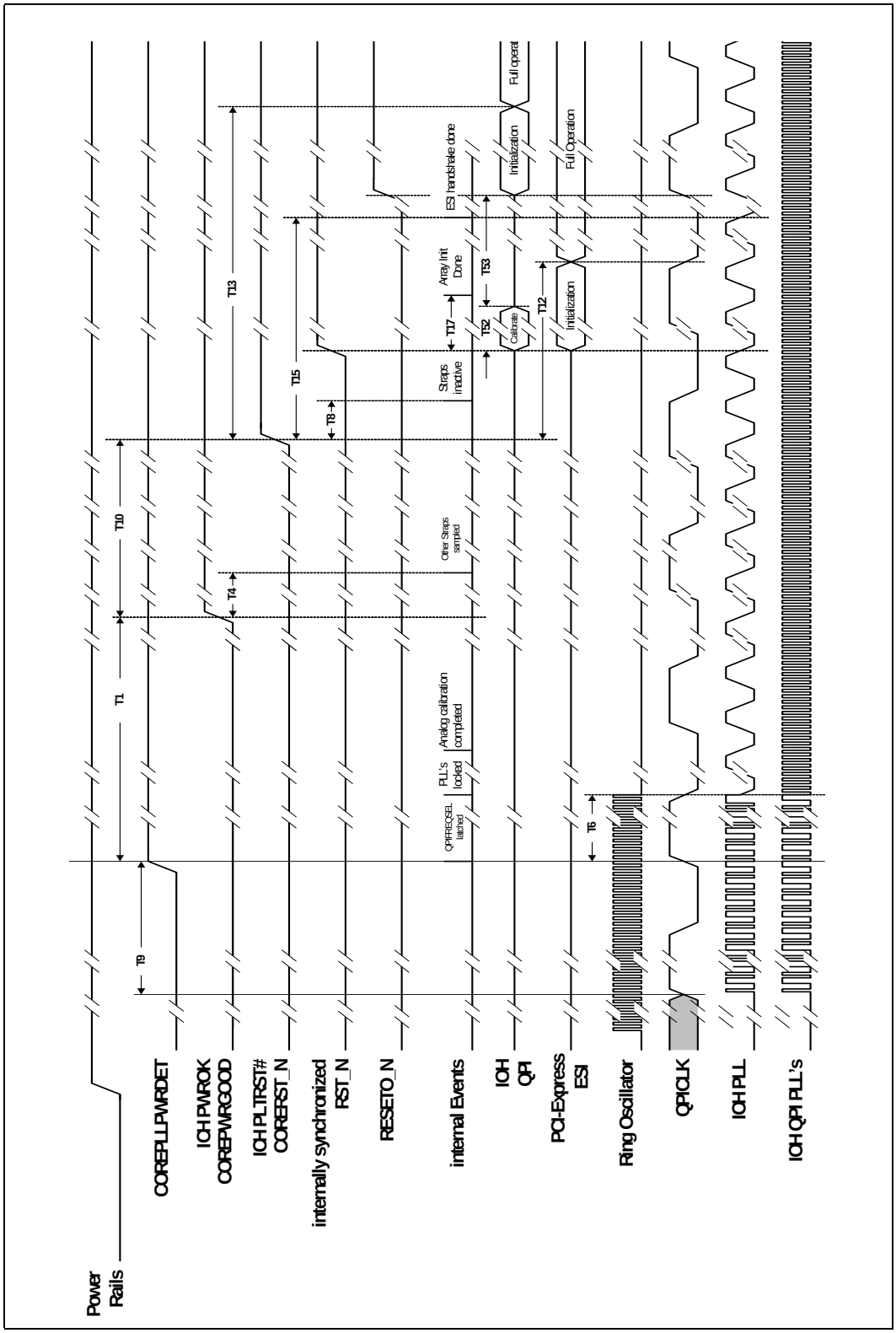

Figure 14-6. COREPWRGOOD Reset (example)

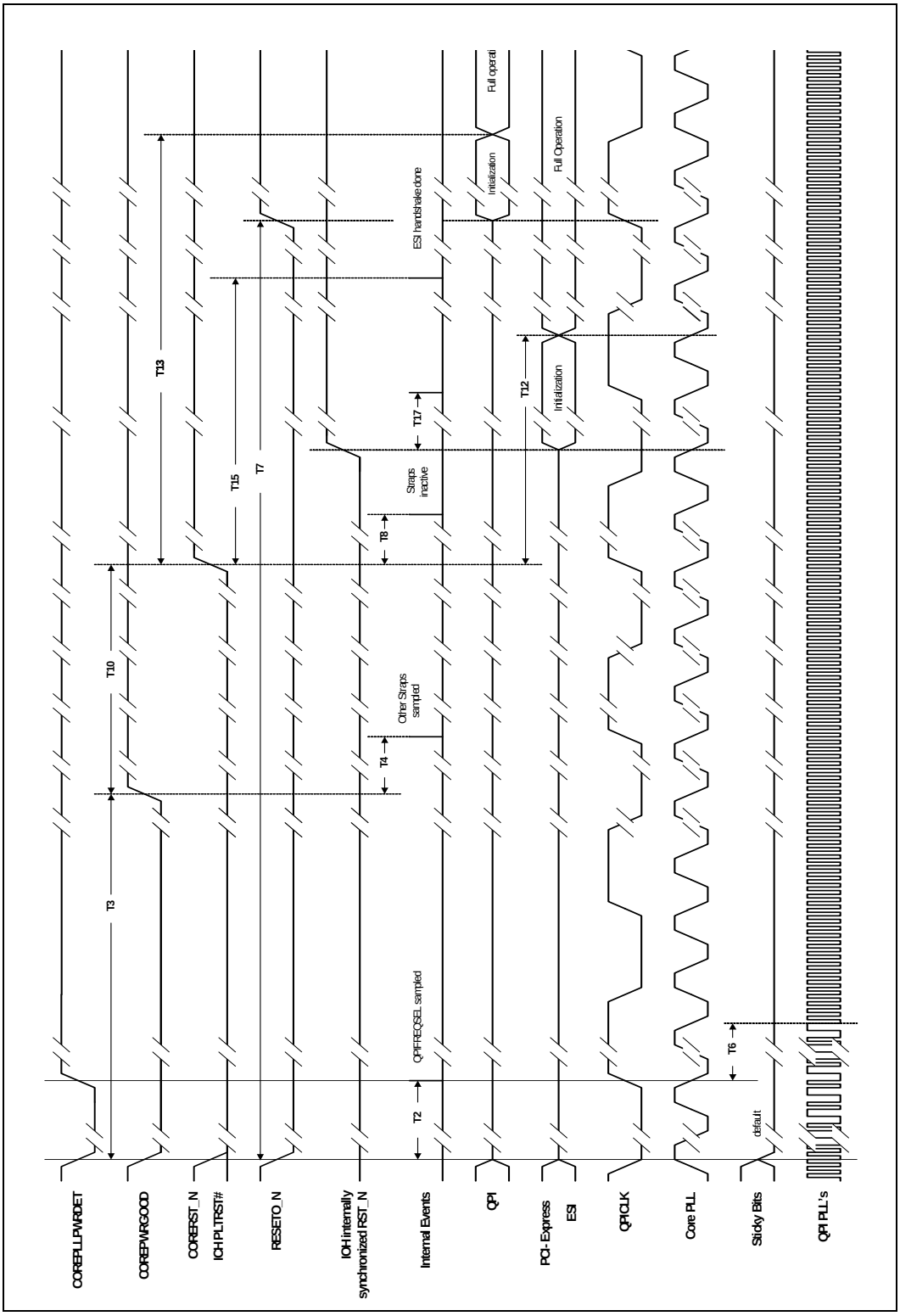

Figure 14-7. Hard Reset (Example)

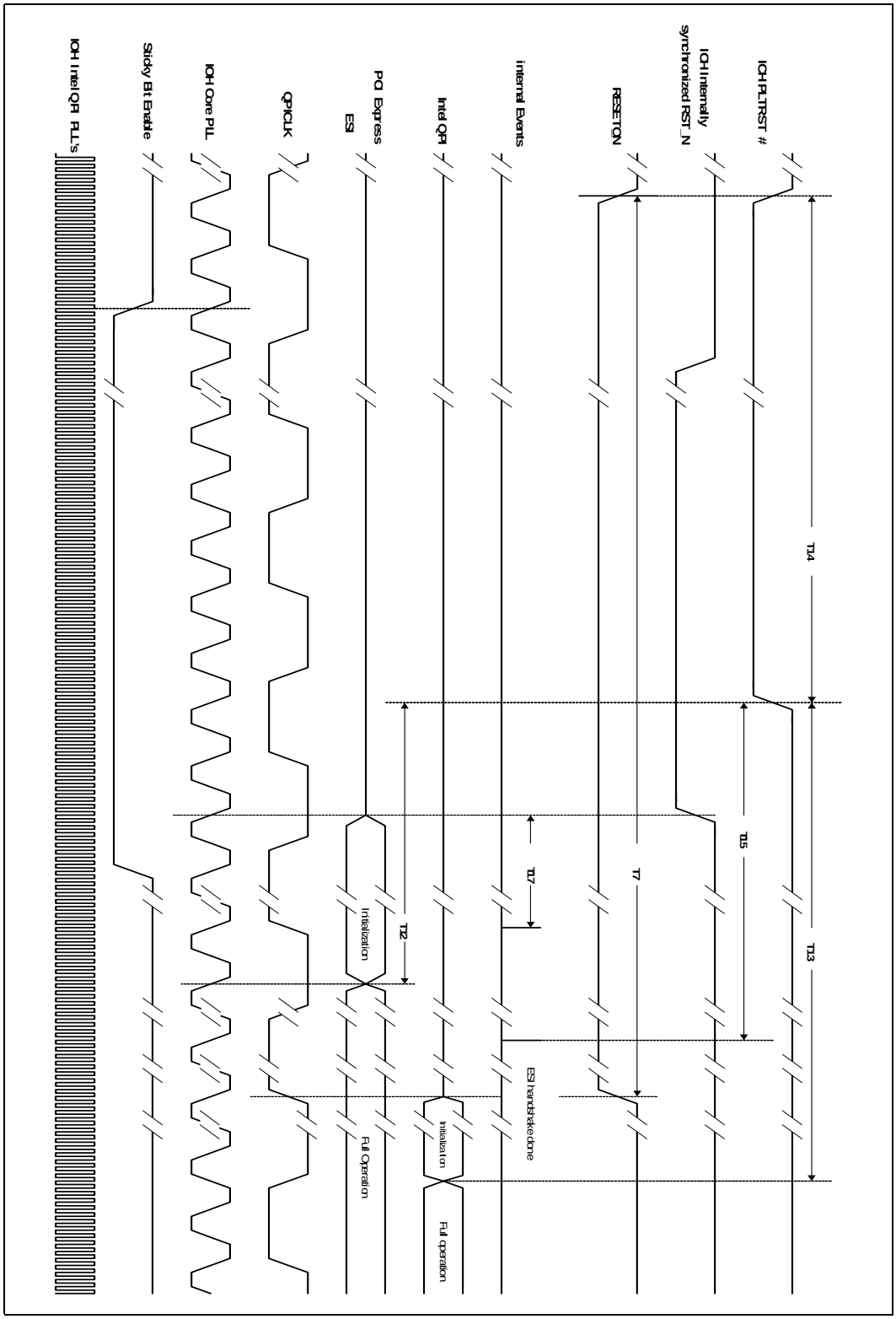

Figure 14-8. IOH CORERST_N Re-Triggering Limitations

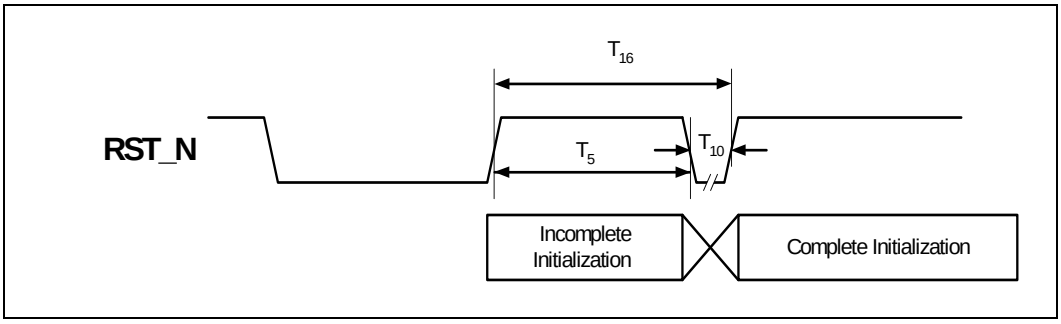

Table 14-3 specifies the timings drawn in Figure 14-5, Figure 14-6, Figure 14-7, and Figure 14-8. Nominal clock frequencies are described. Specifications still hold for de-rated clock frequencies.

Table 14-3. Core Power-Up, Core POWERGOOD, and Core Hard Reset Platform Timings (Sheet 1 of 2)

Timing	Description	Min	Max	Comments
T1	COREPLLPWRDET signal assertion to COREPWRGOOD signal assertion	100 us	15 ms	Min/Max timing applies to PLLPWRDET signal assertion to AUXPWRGOOD signal assertion when Intel ME AUX power uses separate power source.
T2	COREPWRGOOD de-assertion to straps stable		40 ns	
T3	COREPWRGOOD de-assertion	80 ns		Minimum COREPWRGOOD de-assertion time while power and platform clocks are stable.
T4	COREPWRGOOD assertion to straps sampled		0 ns	
T5	CORERST_N de-assertion to CORERST_N assertion	50 QPICLKs		Minimum CORERST_N re-trigger time.
T6	PLLPWRDET assertion or CORERST_N assertion or stable strap on COREPWRGOOD de-assertion to PLL lock acquisition	960 ns		COREPWRGOOD de-assertion only requires Intel QuickPath Interconnect PLL lock re-acquisition because their frequency is determined by a strap. CORERST_N assertion only requires Intel QuickPath Interconnect PLL lock re-acquisition when the FREQ register changed.
T7	RESETO_N duration			N/A
T8	CORERST_N de-assertion to straps inactive	12 ns	18 ns	Strap Hold Time
T9	Reference clock stable to PLLPWRDET signal assertion	100 ns		Min/Max timing applies to PLLPWRDET when Intel ME AUX power uses separate power source.
T10	COREPWRGOOD assertion to CORERST_N de-assertion	1 ms		During Core Power Cycling
T12	CORERST_N signal de-assertion to completion of PCI Express initialization sequence		12.5 ms	
T14	CORERST_N assertion to CORERST_N de-assertion	2.1 us		
T15	CORERST_N signal de-assertion to completion of ESI reset sequence		100 us	ICH specification
T16	CORERST_N re-trigger delay	T5+T10		
T17	SMBus delays w/r/t CORERST_N	3 QPICLKs		

Table 14-3. Core Power-Up, Core POWERGOOD, and Core Hard Reset Platform Timings (Sheet 2 of 2)

Timing	Description	Min	Max	Comments
T52	Intel QuickPath Interconnect Calibration	1 ms		
T54	Intel QuickPath Interconnect Detect	20 ns		Min = processor is ready before IOH
T55	Intel QuickPath Interconnect Activate Forwarded Clock	3.9 us		
T56	Intel QuickPath Interconnect bit lock	1.25 us		
T57	Intel QuickPath Interconnect bit-lane deskew	98 ns		
T58	Intel QuickPath Interconnect physical parameter exchange	98 ns		
T59	Intel QuickPath Interconnect link width negotiation	98 ns		
T60	Intel QuickPath Interconnect set flit boundary	10 ns		
T61	Intel QuickPath Interconnect wait for link initialization stall to clear	150 ms		Min = all stall conditions cleared. Starts at de-assertion of CORERST_N. Quote from TWD was 15us, allowing 10,000x guardband for S/W delays.

§

15 Component Clocking

15.1 Component Specification

15.1.1 Reference Clocks

The QPI{0/1}CLK reference clock is the core PLL reference clock, operating at 133 MHz; the reference clock frequency is common between all Intel QuickPath Interconnect agents. This mesochronous reference clock requires no phase matching between agents, tolerating zero ppm frequency offset between agents.

The PE{0/1}CLK is the reference clock supplied to the IOH for PCI Express and ESI interfaces, and operates at 100 MHz.

The Intel QuickPath Interconnect interface's phit frequency domain is derived from the QPI{0/1}CLK reference clocks.

When QPIxCLK spectrum spreading is disabled, the PCI Express links can operate mesochronously (zero ppm frequency tolerance between PCI Express agents) or plesiochronously (a few hundred ppm frequency tolerance between PCI Express agents) while the PExCLK and QPIxCLK domains operate mesochronously.

When QPIxCLK spectrum spreading is enabled, a PCI Express link operating plesiochronously (because both ends' master clocks are derived from the different oscillators) prevents ratioed PExCLK:QPIxCLK domains, necessitating "asynchronous" data transfer between domains.

Asynchronous PExCLK reference clocks may be derived from different oscillators.

15.1.2 JTAG

The JTAG clock, TCK, is asynchronous to core clock. For private TAP register accesses, one TCK cycle is a minimum of 12 core cycles. The TCK high time is a minimum of 6 core cycles in duration. The TCK low time is a minimum of 6 core cycles in duration.

For public TAP register accesses, TCK operates independently of the core clock.

15.1.3 SMBus

The SMBus clock is synchronized to the Intel QuickPath Interconnect core clock. Data is driven into the IOH with respect to the serial clock signal. Data received on the data signal with respect to the clock signal will be synchronized to the core. The serial clock can not be active until 10 mS after RST_N de-assertion. When inactive, the serial clock should be de-asserted (High). The serial clock frequency is 100 KHz.

15.1.4 Hot-Plug Serial Buses

The PCI Express hot-plug Virtual Pin Interface clock is a dedicated SMBus interface; the PCI Express Hot-Plug signals reside on this serial interface. The serial clock frequency is 100 KHz. This clock is not available during standby.

15.1.5 RMII Bus

The RMII reference clock frequency is 50 MHz, which is available during standby.

If the RMII bus is not used, the RMII reference clock input pin can be tied to ground through a resistor.

15.1.6 CLINK Bus

The CLINK reference clock frequency is 66 MHz, which is available during standby.

15.1.7 Intel Management Engine Clock

The Intel Management Engine (Intel ME) can handle a reference clock frequency of 133 MHz or 100 MHz which must be provided for Intel ME operation. The Intel ME's 200 MHz DDRCLK[P/N] clock output is derived from this reference clock.

For a non-Intel ME configuration it is optional to omit the reference clock to the Intel ME with certain restrictions. While this configuration may slightly improve platform BOM for non-Intel ME-based systems, it is not recommended unless absolutely sure that no future desire to operate Intel ME firmware on this platform will arise.

Table 15-1. The Clock Options for a Intel ME and Non-Intel ME Configuration System

Reference clk Source	Intel ME-USED System	Intel ME-UNUSED System	Notes
133 MHz	Support	Support	DDRFREQ[3:2] tied to '00
100 MHz	Support	Support	DDRFREQ[3:2] tied to '01
No CLK	Configuration is not supported	Support	This configuration is **only** for ME-Unused system. ME_CLK_SRC must be tied to 0 if no reference clock is provided.

15.1.8 Clock Pin Descriptions

Table 16-1. Clock Pins (Sheet 1 of 2)

Pin Name	Pin Descriptions
QPI0REFCLKP	Intel QuickPath Interconnect 0-interface reference clock
QPI0REFCLKN	Intel QuickPath Interconnect 0-interface reference clock (complement)
QPI1CLKP	Intel QuickPath Interconnect 1-interface reference clock
QPI1CLKN	Intel QuickPath Interconnect 1-interface reference clock (complement)
QPI0TPCLK[0]	Intel QuickPath Interconnect 0 Transmitter forwarded clock 0
QPI0TPCLK[1]	Intel QuickPath Interconnect 0 Transmitter forwarded clock 1
QPI0TNCLK[0]	Intel QuickPath Interconnect 0 Transmitter forwarded clock 0 (complement)
QPI0TPCLK[1]	Intel QuickPath Interconnect 0 Transmitter forwarded clock 1 (complement)
QPI1TPCLK[0]	Intel QuickPath Interconnect 1Transmitter forwarded clock 0
QPI1TPCLK[1]	Intel QuickPath Interconnect 1Transmitter forwarded clock 1
QPI1TNCLK[0]	Intel QuickPath Interconnect 1Transmitter forwarded clock 0 (complement)
QPI1TPCLK[1]	Intel QuickPath Interconnect 1Transmitter forwarded clock 1 (complement)
QPI0RPCLK[0]	Intel QuickPath Interconnect 0 Receiver forwarded clock 0

Table 16-1. Clock Pins (Sheet 2 of 2)

Pin Name	Pin Descriptions
QPI0RPCLK[1]	Intel QuickPath Interconnect 0 Receiver forwarded clock 1
QPI0RNCLK[0]	Intel QuickPath Interconnect 0 Receiver forwarded clock 0 (complement)
QPI0RPCLK[1]	Intel QuickPath Interconnect 0 Receiver forwarded clock 1 (complement)
QPI1RPCLK[0]	Intel QuickPath Interconnect 1 Receiver forwarded clock 0
QPI1RPCLK[1]	Intel QuickPath Interconnect 1 Receiver forwarded clock 1
QPI1RNCLK[0]	Intel QuickPath Interconnect 1 Receiver forwarded clock 0 (complement)
QPI1RPCLK[1]	Intel QuickPath Interconnect 1 Receiver forwarded clock 1 (complement)
PE0CLKP	PCI Express 0-interface clock
PE0CLKN	PCI Express 0-interface clock (complement)
PE1CLKP	PCI Express 1-interface clock
PE1CLKN	PCI Express 1-interface clock (complement)
XDPSTBP_N	Debug Port strobe
XDPSTBN_N	Debug Port strobe (complement)
XDPCLK1X	1X XDP clock
TCK	TAP clock
PEHPSCL	PCI Express hot-plug Virtual Pin Interface clock
SMBSCL	SMBus clock
DDR_REFCLK_P	Intel Management Engine clock
DDR_REFCLK_N	Intel Management Engine clock (complement)
CLCLK	CLINK clock
RMII_CLK	RMII clock
DDRCLK_P	DDR clock
DDRCLK_N	DDR clock (complement)
DDRCKE	DDR clock enable
DDREDQS	DDR data strobe
DDREDQS_N	DDR data strobe (complement)

15.1.9 High Frequency Clocking Support

15.1.9.1 Spread Spectrum Support

The IOH supports Spread Spectrum Clocking (SSC). SSC is a frequency modulation technique for EMI reduction. Instead of maintaining a constant frequency, SSC modulates the clock frequency/period along a predetermined path, that is, the modulation profile.The IOH supports a nominal modulation frequency of 30 KHz with a downspread of 0.5%.

15.1.9.2 Stop Clock

PLLs in the IOH cannot be stopped.

15.1.9.3 Jitter

Intel QuickPath Interconnect strongly recommends that QPIxCLK cycle-to-cycle jitter delivered to the package ball should be less than or equal to 50 ps (±25 ps).

PExCLK jitter must be less than 150 ps (±75 ps)

15.1.9.4 Forwarded Clocks

“Forwarded clocks” are not clocks in the normal sense. Instead, they act as constantly-toggling bit-lanes which supply UI phase information to all associated bit-lane receivers in the channel removing the phase error between the transmitter and receiver due to long-term jitter. The Intel QuickPath Interconnect clocks utilize low-speed (133 MHz) reference clocks for the primary input of their I/O PLLs.

15.1.9.5 External Reference

An external crystal oscillator is the preferred source for the PLL reference clock. A spread spectrum frequency synthesizer that meets the jitter input requirements is recommended.

15.1.9.6 PLL Lock Time

The assertion of the PWRGOOD signal initiates the PLL lock process.

15.1.9.7 Analog Power Supply Pins

Each PLL requires an analog Vcc and Analog Vss pad and external LC filter. The filter is NOT to be connected to the system board Vss. The ground connection of the filter is grounded to on-die Vss.

15.2 Miscellaneous Requirements and Limitations

A reference clock must always be supplied to QPI0CLK{P/N}. A reference clock must be supplied to QPI1CLK{P/N} when a processor is connected to Intel QuickPath Interconnect port 1.

§

16 Reliability, Availability, Serviceability (RAS)

16.1 RAS Overview

This chapter describes the features provided by the IOH for the development of high Reliability, Availability, Serviceability (RAS) systems. RAS refers to three main features associated with system's robustness. These features are summarized as follows:

Reliability: Refers to how often errors occur in the system, and whether the system can recover from an error condition.

Availability: Refers to how flexible the system resources can be allocated or redistributed for the system utilizations and system recovery from errors.

Serviceability: Refers to how well the system reports and handles events related to errors, power management, and hot-plug.

IOH RAS features aim to achieve the following:

- Soft, uncorrectable error detection and recovery on PCI Express and Intel QuickPath Interconnect links.
  - CRC is used for error detection and error recovered by packet retry.
- Clearly identify non-fatal errors whenever possible and minimize/eliminate fatal errors.
  - Synchronous error reporting of the affected transactions by the appropriate completion responses or data poisoning.
  - Asynchronous error reporting for non-fatal and fatal errors via inband messages or outband signals.
  - Enable software to contain and recover from errors.
  - Error logging/reporting to quickly identify failures, contain and recover from errors.
- PCI Express hot-plug (add/remove) to provide better serviceability

IOH RAS features can be grouped into five categories. These features are summarized below and detailed in the subsequent sections:

1. **System level RAS**
   a. Platform or system level RAS for inband and outband system management features.
   b. Dynamic partitioning and on-line hot add/remove for serviceability.
2. **IOH RAS**
   a. IOH RAS features for error detection, logging, and reporting.
3. **Intel® QuickPath Interconnect RAS**
   a. Standard Intel® QuickPath Interconnect RAS features as specified in the Intel® QuickPath Interconnect specification.

4. **PCI Express RAS**
   a. Standard **PCI Express** RAS features as specified in the **PCI Express** base specification.
5. **Hot-Plug (Add/Remove)**
   a. CPU, memory, and PCI Express hot-plug (add/remove) support.

16.2 System Level RAS

System level RAS features include the following:

1. Boot processor
2. Inband system management by processor in CM/SMM mode.
3. Outband system management from SMBus by Baseboard Management Controller (BMC).
4. On-Line dynamic hard partitioning.
5. System-Level Debug features.

16.2.1 Boot Processor

IOH is capable of booting from either Intel QuickPath Interconnect ports on the legacy IOH. IOH will advertise firmware agent on the legacy IOH if the firmware strap is set. This allows either of the directly connected processors to fetch flash. The processors may then use a semaphore register in the IOH to determine which processor is designated as the boot processor.

16.2.2 Inband System Management

Inband system management is accomplished by firmware running in high privileged mode. In the event of an error, fault, or hot add/remove, firmware is required to determine the system's condition and service the event accordingly. Firmware may enter CM mode for these events, so that it has the privilege to access the OS invisible configuration registers.

16.2.3 Outband System Management

Outband system management relies on the out-of-band agents to access system configuration registers via outband signals. The outband signals, such as SMBus and JTAG, are assumed to be secured and have the right to access all CSRs within a component. This includes the QPI configuration (QPICFG) registers and PCIe configuration (PCICFG) registers; however, SMBus/JTAG accesses outside of QPICFG or PCICFG space are not permitted.

Both SMBus and JTAG are connected globally to CPUs, IOHs, and ICH – through a shared bus hierarchy for SMBus, or through a serial bit chain for JTAG. By using the outband signals, an outband agent is able to handle events such as hot-plug, partitioning, or error recovery. Outband signals provide the BMC a global path to access the CSRs in the system components, even when the CSRs become inaccessible to processors through the inband mechanisms. Externally, the SMBus is mastered by the BMC and JTAG is controlled by a platform specific mechanism.

To support outband system management, the IOH provides both SMBus and JTAG interfaces. Either interface can access the CSR registers in the IOH (QPICFG and PCICFG) or in the downstream I/O devices (PCICFG).

16.2.4 Dynamic Partitioning

Dynamic partitioning refers to the addition or removal of system components to/from a partition without shutting down the affected partitions. Dynamic partitioning provides greater RAS features:

- Provides greater availability by dynamically allocating and dividing system resources for partitioning.
- Provides greater serviceability through partition isolation and allowing hot-plug (add/remove) of system resources within a partition.
- Provides greater reliability by containing the errors within the partition and not affecting operation of another partition.

Support of dynamic partitioning requires hot add/remove capability. The IOH provides CSR registers for partitioning support.

16.3 IOH RAS Support

The IOH core RAS features are summarized below and detailed in subsequent sections.

1. Error detection of the IOH internal data path and storage structures.
2. Detection, correction, logging, and reporting of system errors and faults.

16.4 IOH Error Reporting

The IOH logs and reports detected errors via “system event” generations. In the context of error reporting, a system event is an event that notifies the system of the error. Two types of system events can be generated - an inband message to the processor, or an outband signal assertion to the platform. In the case of inband messaging, the processor is notified of the error by the inband message (interrupt, failed response, and so on). The processor responds to the inband message and takes the appropriate action to handle the error. Outband signaling (Error Pins and Thermalert_N and Thermtrip_N) informs an external agent of the error events. An external agent such as an SSP or BMC may collect the errors from the error pins to determine the health of the system, sending interrupts to the processor, accordingly. In some severe error cases, when the system no longer responds to inband messages, the outband signaling provides a way to notify the outband system manager of the error. The system manager can then perform a system reset to recover the system functionality.

Figure 16-1 and Figure 16-2 shows examples that the IOH receives PCIe error messages from downstream IO devices, contrasts inband and outband error reporting, and log the errors. On the Figure 16-1, the error is converted to an inband interrupt to the CPU and causes the CPU to enter the interrupt service routine. On the Figure 16-2, the error is converted to an outband error pin assertion. The error pin assertion signals the BMC of the error and causes BMC to service the error. In either case, the service agent (CPU or BMC) would inquire the IOH of the information associated with the error, and takes the appropriate action to recover the system from the error condition.

Figure 16-1.Error Signal Converted to Interrupt Example

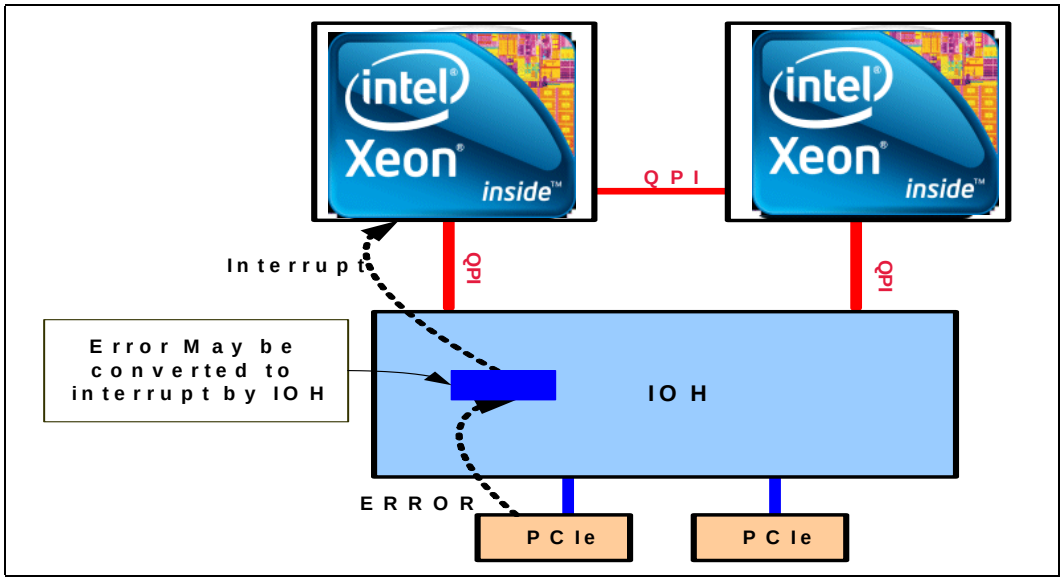

Figure 16-2. Error Signal Converted to Error Pins Example

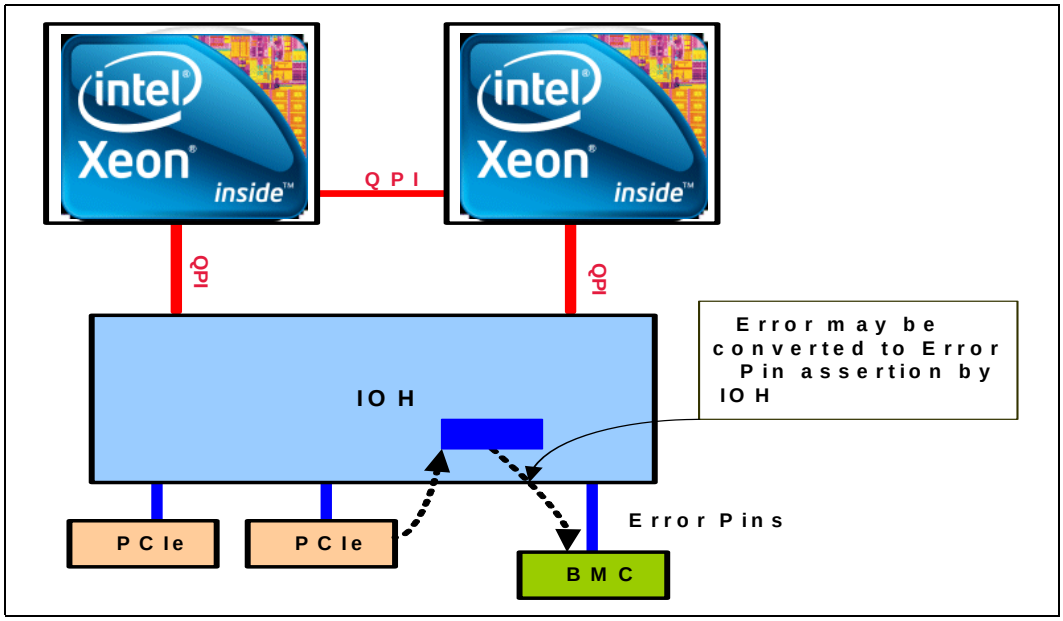

The IOH detects errors from the PCI Express link, ESI link, Intel QuickPath Interconnect link, or IOH core itself. The error is first logged and mapped to an error severity, and then mapped to a system event(s) for error reporting.

IOH error report features are summarized below and detailed in the following sections:

- Detect and logs Intel QuickPath Interconnect, PCI Express/ESI, and IOH core errors.
- First and Next error detection and logging for fatal and non-fatal errors.
- Allows flexible mapping of the detected errors to different error severities.

- Allows flexible mapping of the error severity to different reporting mechanisms
- Supports PCI Express error reporting mechanism.

16.4.1 Error Severity Classification

16.4.1.1 General Error Severity Classification

In the IOH, general errors are classified into three severities: Correctable, Recoverable, and Fatal. This classification separates those errors resulting in functional failures from those errors resulting in degraded performance. Each severity can trigger a system event according to the mapping defined by the error severity register. This mechanism provides software the flexibility to map an error to the suitable error severity. For example, a platform may choose to respond to uncorrectable ECC errors with low priority, while another platform design may require mapping the same error to a higher severity. The mapping of the error is set to the default mapping at power-on, such that it is consistent with default mapping defined in Table 16-2. The software/firmware can choose to alter the default mapping after power on.

16.4.1.1.1 Correctable Errors (Severity 0 Error)

Hardware correctable errors include those error conditions where the system can recover without any loss of information. Hardware corrects these errors and no software intervention is required. For example, a Link CRC error, which is corrected by Data Link Level Retry, is considered a correctable error.

- Errors corrected by the hardware without software intervention. System operation may be degraded but its functionality is not compromised.
- Correctable errors may be logged and reported in an implementation-specific manner:
  - Upon the immediate detection of the correctable error, or
  - Upon the accumulation of errors reaching a threshold.

16.4.1.1.2 Recoverable Errors (Severity 1 Error)

Recoverable errors are software correctable or software/hardware uncorrectable errors which cause a particular transaction to be unreliable although the system hardware is otherwise fully functional. Isolating recoverable errors from fatal errors provides system management software the opportunity to recover from the error without reset and disturbing other transactions in progress. Devices not associated with the transaction in error are not impacted by the error. An example of a recoverable error is an ECC Uncorrectable error that affects only the data portion of a transaction.

- Error could not be corrected by hardware and may require software intervention for correction, or
- Error could not be corrected. Data integrity is compromised, but system operation is not compromised.
- Requires immediate logging and reporting of the error to the processor.
- OS/Firmware takes the action to contain the error and begin recovery process on affected partition.

Software Correctable Errors

Software correctable errors are considered “recoverable” errors. This includes those error conditions where the system can recover without any loss of information. Software intervention is required to correct these errors.

- Requires immediate logging and reporting of the error to the processor.
- Firmware or other system software layers take corrective actions.
- Data integrity is not compromised with such errors.

16.4.1.1.3 Fatal Errors (Severity 2 Error)

Fatal errors are uncorrectable error conditions which render a related hardware unreliability. For fatal errors, inband reporting to the processor is still possible. A reset of the entire hard partition may be required to return to reliable operation.

- System integrity is compromised and continued operation may not be possible.
- System interface within a hard partition may be compromised.
- Inband reporting is still possible.
- For example, uncorrectable tag error in cache, or permanent PCI Express link failure, or Intel QuickPath Interconnect failure.
- Requires immediate logging and reporting of the error to the processor.

16.4.1.2 Thermal Error Severity Classification

Thermal errors can be classified into one of three severities supported by IOH. Software also can use “Thermal Error Severity Register (THRERRSV)” to program thermal error severity to one of the three severities supported by IOH or generate either THERMALERT_N or THERMTRIP_N signal please refer to Figure 16-7.

IOH can set up thermal thresholds to generate thermal alert and trip signals when the IOH temperature monitoring sensor detects throttle or catastrophic temperature threshold reached. Intel recommendation is to keep default values for Thermalert and Thermtrip severities.

Note: Intel recommendation is to keep thermal error severities as default which described in Section 21.6.7.6, “THRERRSV: Thermal Error Severity Register” .

16.4.2 Inband Error Reporting

Inband error reporting signals the system of a detected error via inband cycles. There are two complementary inband mechanisms in the IOH. The first mechanism is synchronous reporting, along with transaction responses/completions; the second mechanism is asynchronous reporting of an inband error message or interrupt. These mechanisms are summarized as follows:

Synchronous Reporting

- Data Poison bit indication in the header:
  - Generally for uncorrectable data errors (for example, uncorrectable data ECC error).
- Response status field in response header:
  - Generally for uncorrectable error related to a transaction (for example, failed response due to an error condition).

- No Response
  - Generally for uncorrectable error that has corrupted the requester information and returning a response to the requester becomes unreliable. The IOH silently drops the transaction. The requester will eventually time out and report an error.

Asynchronous Reporting

- Reported through inband error or interrupt messages:
  - A detected error triggers an inband message to the IOH or processor.
  - Errors are mapped to three error severities. Each severity can generate one of the following inband messages (programmable):

    MCA

    CPEI*

    NMI

    SMI

    MCA**

    None (inband message disable)
  - Each error severity can also cause an error pin assertion in addition to the above inband message.
  - Fatal severity can cause viral in addition to the above inband message and error pin assertion.
  - The IOH PCI Express root ports can generate MSI, or forward MSI/INTx messages from downstream devices, per the *PCI Express Base Specification,* Revision 2.0.

16.4.2.1 Synchronous Error Reporting

Synchronous error reporting is generally received by a component, where the receiver attempts to take corrective action without notifying the system. If the attempt fails, or if corrective action is not possible, synchronous error reporting may eventually trigger a system event via the asynchronous reporting mechanisms. Synchronous reporting methods are described in the following sections.

16.4.2.1.1 Completion/Response Status

A Non-Posted Request requires the return of the completion cycle. This provides an opportunity for the responder to communicate to the requester the success or failure of the request. A status field can be attached to the completion cycle and sent back to the requester. A successful status signifies that the request was completed without an error. Conversely, a “failed” status denotes that an error has occurred as the result of processing the request.

16.4.2.1.2 No Response

For errors that have corrupted the requester’s information (for example, requester/source ID in the header), the IOH will not send a response back to the requester. This will eventually cause the original requester to time-out and trigger an error at the requester.

16.4.2.1.3 Data Poisoning

A Posted Request that does not require a completion cycle needs another form of synchronous error reporting. When a receiver detects an uncorrectable data error, it must forward the data to the target with the “bad data” status indication. This form of

error reporting is known as “data poisoning”. The target that receives poisoned data must ignore the data or store it with “poisoned” indication. Both PCI Express and Intel® QuickPath Interconnect provide a poison bit field in the transaction packet that indicates the data is poisoned. Data poisoning is not limited to posted requests. Requests that require completion with data, which can also indicate poisoned data.

Since IOH can be programmed to signal (interrupt or error pin) the detection of poisoned data, software should ensure that the report of the poisoned data should come from one agent, preferably by the original agent that detects the error, that is, the agent that poisoned the data.

In general, the IOH forwards the poisoned indication from one interface to another (for example, Intel QuickPath Interconnect to PCI Express, PCI Express to Intel QuickPath Interconnect, or PCI Express to PCI Express).

16.4.2.1.4 Time-Out

Time-out error indicates that a transaction failed to complete due to expiration of the Time-out counter. This could be a result of corrupted link packets, I/O interface errors, and so on. In the IOH, transaction time-out is tracked from each PCIe root port or internal source. Intel QuickPath Interconnect’s time-out mechanism is not supported in tracking of time-out at the source CPU or I/O interface.

16.4.2.2 IOH Asynchronous Error Reporting

Asynchronous error reporting is used to signal the system of a detected error. For an error that requires immediate attention, an error that is not associated with a transaction, or an error event that requires system handling, asynchronous report is used. Asynchronous error reporting is controlled through the IOH error registers. These registers enable the IOH to report various errors via system events (for example, NMI, etc). In addition, the IOH provides standard sets of error registers specified in the *PCI Express Base Specification,* Revision 2.0.

The IOH error registers provide software the flexibility to map an error to one of the three error severities. Software can associate each of the error severities with one of the supported inband messages or be disabled for inband messaging. The error pin assertion can also be enabled/disabled for each of the error severities. Upon detection of a given error severity, the associated event(s) is triggered, which conveys the error indication through inband and/or outband signaling. Asynchronous error reporting methods are described in the following sections.

16.4.2.2.1 NMI (Non-Maskable Interrupt)

ICH reports NMI through the assertion of the NMI_N pin. When an error triggers NMI, IOH will broadcast a NMI virtual legacy wire cycle to the CPUs via Intel QuickPath Interconnect. IOH converts NMI pin assertion to the Intel QuickPath Interconnect legacy wire cycle on the behalf of the ICH. Refer to Chapter 8, “Interrupts” for more IOH interrupt handling.

NMI input to IOH can also be routed to MCA message, refer to Section 21.11.2.25, “QPIPNMIC: Intel® QuickPath Interconnect Protocol NMI Control” for register descriptions.

16.4.2.2.2 CPEI (Correctable Platform Event Interrupt)

CPEI is associated with an interrupt vector that is programmed in the ICH component. When CPEI is needed for error reporting, the IOH is configured to send CPEI message to the legacy IOH. The message is converted in the Legacy IOH to Error_N[0] pin

assertion that conveys the CPEI event when enabled. As a result, ICH sends a CPU interrupt with the specific interrupt vector and type defined for CPEI. The CPEI message is decoded by the CSI block where the corresponding error logging status bit is set. The CSI block also drives the appropriate error severity signal to the Global Error Escalation block to assert ERR_N[0].

16.4.2.2.3 SMI (System Management Interrupt)

The IOH supports the use of the System Management Interrupt when used in Intel® Xeon® processor based systems. Through the appropriate configuration of the IOH error control and SYSMAP registers, error events within the IOH can be directed to the SMI, allowing the BIOS SMI handler to be the first responder to error events. Refer to the Intel® QuickPath Interconnect Protocol SMI control register Section 21.11.2.24, "QPIPSMIC: Intel® QuickPath Interconnect Protocol SMI Control" for more detailed description.

16.4.2.2.4 Machine Check Abort (MCA)

The machine check abort (MCA) message is used to indicate severe error conditions in the system that needs immediate attention. This is typically used by the IOH on detection of a severe but contained error to alert one of the processors such that error handling software can take appropriate action to either recover or shutdown the system. System architecture provides a machine check abort mechanism that cannot be masked or disabled by other tasks and provides a more robust mechanism for dealing with errors. The machine check abort message on Intel QuickPath Interconnect enables a processor to utilize this feature. The machine check abort message is delivered on Intel QuickPath Interconnect using the IntPhysical transaction with a machine check delivery mode. This delivery mode is always used with physical destination mode, directed to a single processor context and edge triggered.

When an error triggers an MCA, the IOH will dispatch a SpcInt cycle to the designated processor specified in the MCA CSR. Refer to Section 21.11.2.26, "QPIPMCAC: Intel QuickPath Interconnect Protocol MCA Control" for register descriptions.

Note: Both Intel Itanium processor 9300 series and Intel Xeon processor 7500 series support MCA.

16.4.2.2.5 None (Inband Message Disable)

The IOH provides the flexibility to disable inband messages on the detection of an error. By disabling the inband messages and enable error pins, IOH can be configured to report the errors exclusively via error pins.

16.4.2.2.6 Error Pins[2:0]

The IOH provides three open-drain error pins for the purpose of error reporting – one pin for each error severity. The error pin can be used in certain class of platforms to indicate various error conditions and can also be used when no other reporting mechanism is appropriate. For example, error signals can be used to indicate error conditions (even hardware correctable error conditions) that may require error pin assertion to notify outband components (such as BMC) in the system. In some extreme error conditions, when inband error reporting is no longer possible, the error pins provide a way to inform the outband agent of the error. Upon detecting error pin assertion, the outband agent interrogates various components in the system and determines the health state of the system. If the system can be gracefully recovered without reset, the BMC performs the proper steps to put the system back to a functional state. However, if the system is unresponsive, the outband agent can assert reset to force the system back to a functional state.

The IOH allows software to enable/disable error pin assertion upon the detection of the associated error severity (in addition to inband message). When a detected error severity triggers an error pin assertion, the corresponding error pin is asserted. Software must clear the error pin assertion, including after a reset, via the error pin status register. The error pins can also be configured as general purpose outputs. In this configuration, software can write directly to the error pin register to cause the assertion and deassertion of the error pin.

16.4.2.2.7 Thermalert_N and Thremtrip_N Pins

There are two open-drain pins reserved for thermal errors. When the IOH is programmed to map thermal alert and thermal trip errors to THERMALERT_N and THERMTRIP_N pins, then these errors can not generate any type of event in the system events.

Notice: The THERMTRIP_N and THERALERT_N pins should not be used for other errors except for thermal errors.

16.4.2.2.8 Viral Alert

Viral alert is a mechanism to indicate fatal error where it is difficult to avoid error propagation without immediately shutting down the system. Viral alert addresses the error propagation issue related to fatal errors and allows the system to be shutdown gracefully and in the process cleaning up the system interface. This reporting mechanism assumes that the Intel QuickPath Interconnect interface is operational and can be used to deliver the error indication. Each Intel QuickPath Interconnect packet header contains a viral alert bit in a profile-dependent part to indicate if a fatal error has compromised the system state. Each protocol layer agent that detects a fatal error or receives a packet that has its viral alert indication set, turns viral and starts setting the viral alert indication on all packets initiating from itself until the agent is reset. Once an agent becomes viral, then it is assumed that its protocol state has been compromised. I/O agents should stop committing any data to permanent storage or I/O devices after it has become viral. The viral alert mechanism is transparent to the Routing and Link layers.

IOH allows the software to enable/disable viral alert upon the detection of Fatal errors (in addition to inband message and the error pin assertion). When viral is enabled for fatal errors, viral alert is triggered upon the detection of the error. When this occurs:

- IOH will initiate subsequent inbound packets (requests and completions) with viral alert indication set.
- Outbound non-posted transactions (for example, read, configuration, and I/O requests) will be completed immediately by the IOH with the viral bit set and a Failed Response status on the Intel QuickPath Interconnect.
- The IOH will drop all data bound to PCIe (outbound writes and inbound read completions). For outbound writes, the IOH returns an Intel QuickPath Interconnect Failed Response to the initiating CPUs or IOHs.
- Transactions from Intel QuickPath Interconnect targeting the IOH's internal registers (configuration space, memory mapped registers, and so on) will be completed as normal assuming the IOH is healthy enough to respond. The viral bit will be set on the Intel QuickPath Interconnect completion.
- Inbound read and write completions will be converted to a completer abort response on PCIe.
- Inbound posted transactions to the IOH in viral mode will be all dropped. This includes all the messages that the IOH receives from the ICH. The only way to come out of this viral mode is to clear the viral status.

Viral is used in severe error conditions to prevent harmful impact for the error (for example, drop all viral affected transactions until system reset). Viral is used for Fatal errors.

The IOH provides a mechanism to disable and clear viral using configuration registers. This would be used by the platform to turn off viral to allow logging and blue screen alert. The register that clears viral mode is located in Section 21.6.7.16.

16.4.2.2.9 PCI Express INTx and MSI Interrupt Messages

PCI Express INTx and MSI interrupt messages are supported through the PCI Express standard error reporting. The IOH forwards the MSI and INTx interrupt message generated downstream from I/O devices to the PCI Express ports. The IOH PCI Express ports themselves also generate MSI interrupts for error reporting, if enabled. Refer to Chapter 8, "Interrupts" for details on INTx and MSI interrupts. Also refer to the *PCI Express Base Specification,* Revision 2.0 for details on the PCI Express standard and advanced error capabilities.

16.4.2.2.10 PCIe/ESI "Stop and Scream"

There is an enable bit per PCIe port that controls "stop and scream" mode. In this mode the desire is to disallow sending of poisoned data onto PCIe and instead disable the PCIe port that was the target of poisoned data. This is done because in the past there have been PCIe/ESI devices that have ignored the poison bit, and committed the data which can corrupt the I/O device.

16.4.2.2.11 PCIe "Live Error Recovery"

PCI Express ports support the Live Error Recovery (LER) mode. When errors are detected by the PCIe port, the PCIe port goes into a Live Error Recovery mode. When a root port enters the LER mode, it brings the associated link down and automatically trains the link up.

16.4.3 IOH Error Registers Overview

The IOH contains an extensive set of error registers to support error reporting. These error registers are assumed to be sticky unless specified otherwise, please refer to register attributes for detailed. Sticky means the values of the registers are retained even after a hard reset – they can only be cleared by software or by power-on reset. There are two levels of hierarchy for the error registers – Local and Global. The local error registers are associated with the IOH local clusters (PCI Express, ESI, Intel QuickPath Interconnect, and IOH core). The global error registers collect the errors reported by the local error registers and map them to system events. Figure 16-3 illustrates the high level view of the IOH error registers.

Figure 16-3. IOH Error Registers

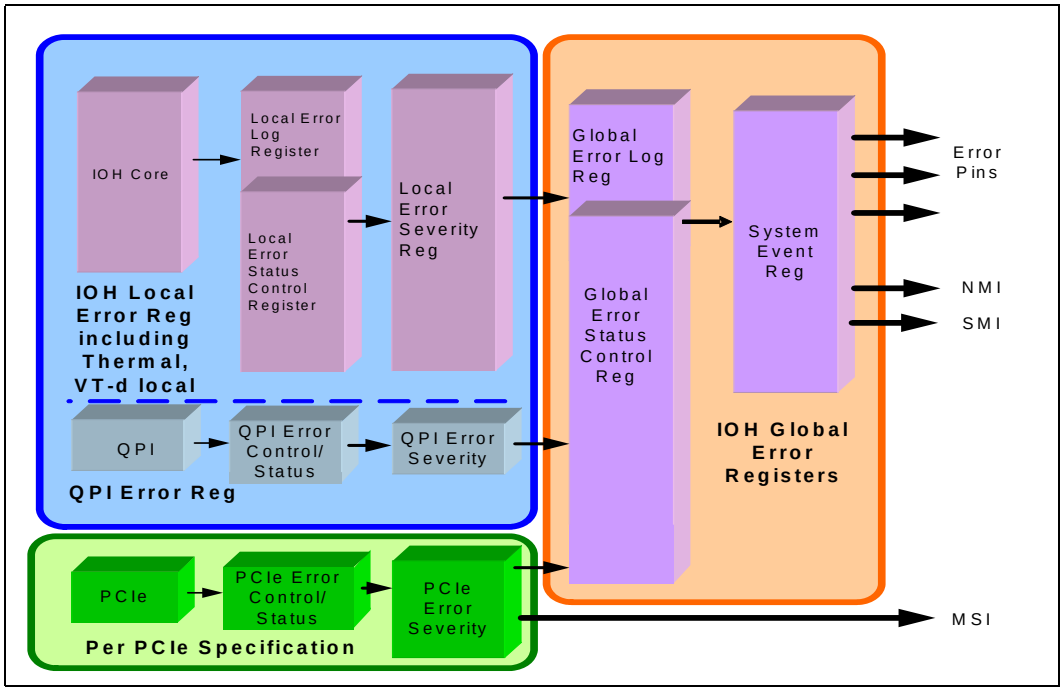

16.4.3.1 Local Error Registers

Each IOH local interface contains a set of local error registers. The PCI Express port (including ESI) local error registers are predefined by the *PCI Express Base Specification*, Revision 1.0a. Intel QuickData Technology DMA has a predefined set of error registers inherited from the previous design.

Since Intel QuickPath Interconnect has not defined a set of standard error registers, the IOH has defined the error registers for the Intel QuickPath Interconnect port using the same error control and report mechanism as the IOH core. This is described below. Refer to the Section 21.8, "IOH Local Error Registers" for the format of these registers. The Figure 16-4 shows the logic diagram of the IOH local error registers.

- **IOH Local Error Status Register (IOHERRST, QPI[1:0]ERRST, QPIP[1:0]ERRST, MIERRST, THRERRST)**

  The IOH core provides local error status register for the errors associated with the IOH component. When a specific error occurs in the IOH core, its corresponding bit in the error status register is set. Each error can be individually enabled/disabled by the error control register.

- **IOH Local Error Control Register (IOHERRCTL, QPI[1:0]ERRCTL, QPIP[1:0]ERRST, MIERRST, THRERRCTL)**

  The IOH core provides the local error control register for the errors associated with the IOH component. Each error detected by the local error status register can be individually enabled/disabled by the error control register. If an error propagation is disabled, the corresponding status bit will not be set for any subsequent detected error. The error control registers are sticky and they can be reset by COREPWRGOOD reset.

- **Local Error Severity Register (QPI[1:0]ERRSV, QPIP[1:0]ERRSV, IOHERRSV, MIERRSV, THRERRSV, PCIERRSV)**

The IOH core provides local error severity registers for the errors associated with the IOH core. IOH internal errors can be mapped to three error severity levels. Intel QuickPath Interconnect and PCI Express error severities are mapped Table 16-3.

- **Local Error Log Register (IOH**ERRST, IOH**ERRHD, QPI[1:0]**ERRST, QPIP[1:0]**ERRRST, QPIP[1:0]**ERRHD, IOHERRCNT, QPI[1:0]ERRCNT, QPIP[1:0]ERRCNT, MI**ERRST, MI**ERRHD, MIERRCNT, THR**ERRST, THRERRCNT)**

  The IOH core provides local error log registers for the errors associated with the IOH component. When an error is detected by the IOH, the information related to the error is stored in the log register. IOH core errors are first separated into Fatal and Non-Fatal (Correctable, Recoverable, and Thermal Alert) categories. Each category contains two sets of log registers: First Error (FERR) and Next Error (NERR). The FERR register logs the first occurrence of an error, while the NERR register logs the next occurrences of the errors. NERR does not log header/address or ECC syndrome. Note that FERR/NERR does not log a masked error. The FERR log remains valid and unchanged from the first error detection until the clearing of the corresponding FERR error bit in the error status register by software. The **ERRST registers are only cleared by writing to the corresponding local error status registers.

  **: FF (Fatal First Error), FN (Fatal Next Error), NF (Non-Fatal First Error), NN (Non-Fatal Next Error)

Figure 16-4. Local Error Signaling on IOH Internal Errors

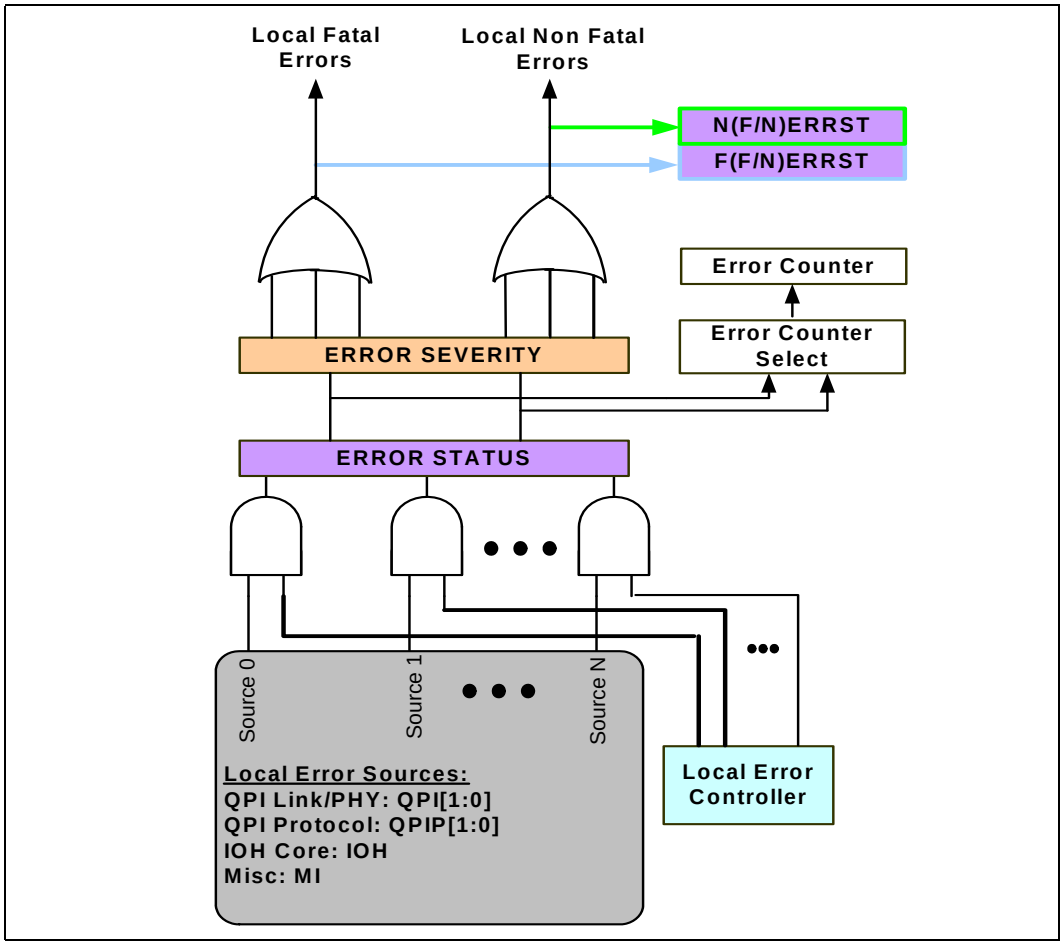

16.4.3.2 Global Error Registers

Global error registers collect the errors reported by the local interfaces and convert the error to system events. Refer to the register descriptions in Section 21.7, "Global Error Registers" for bit definitions for each register.

- **Global Error Control/Status Register (GFERRST, GNERRST, GERRCTL)**

  The IOH provides two global error status registers to collect the errors reported by the IOH clusters – Global Fatal Error Status (GFERRST) and Global Non-fatal Error Status (GNERRST). Each register has identical format; each bit in the register represents the fatal or non-fatal error reported by its associated interface, e.g., the Intel QuickPath Interconnect port, PCI Express port, or IOH core. Local clusters map the detected errors to three error severities and report them to the global error logic. These errors are sorted into Fatal and Non-fatal, and reported to the respective global error status register, with severity 2 as fatal, severities 0 and 1 reported as non-fatal. When an error is reported by the local cluster, the corresponding bit in the global fatal or non-fatal error status register is set. Each error can be individually masked by the global error control registers. If an error is masked, the corresponding status bit will not be set for any subsequent reported error. The global error control register is non-sticky and cleared by reset.

- **Global Log Registers (GFFERRST, GNFERRST, GNFERRST, GNNERRST, GTIME, G**ERRTIME)**

  The GFFERRST logs the first global fatal error while GFNERRST logs the next global fatal errors. Similar for GNFERRST and GNNERRST, the first global non-fatal error is logged in the GNFERRST register while the next global non-fatal errors are logged in the GNNERRST register. The GFFERRST, GFNERRST, GNFERRST and GNNERRST registers have same bit format as GFERRST and GNERRST.

  The time stamp log for the first error and next error log registers provides the time when the error was logged. Software can read this register to determine which of the local interfaces have reported the error. The FERR log remains valid and unchanged from the first error detection until the clearing of the corresponding error bit in the FERR by software.

- **Global System Event Registers (GSYSST, GSYSCTL, SYSMAP)**

  Errors collected by the global error registers are mapped to system event generations. The system event status bit reflects OR'ed output of all unmasked errors of the associated error severity*. Each system event status bit can be individually masked by the system event control registers. Masking a system event status bit forces the corresponding bit to 0. When a system event status bit is set (transition from 0 to 1), it can trigger one or more system events based on the programming of the system event map register as shown in Figure 16-6. Each severity type can be associated with one of the system events: SMI, NMI, or MCA. In addition, the error pin registers allow error pin assertion for an error. When an error is reported to the IOH, the IOH uses the severity level associated with the error to identify which system event should be sent to the system. For example, error severity 2 may be mapped to NMI with error[2] pin enabled. If an error with severity level 2 is reported and logged by the Global Log Register, then an NMI is dispatched to the processor and IOH error[2] is asserted. The processor or BMC can read the Global and Local Error Log register to determine where the error came from, and how it should handle the error.

  At power-on reset, these registers are initialized to their default values. The default mapping of severity and system event is set to be consistent with Table 16-2. Firmware can choose to use the default values or modify the mapping according to the system requirements.

  The system event control register is a non-sticky register that is cleared by hard reset.

The Figure 16-5 shows an example how an error is logged and reported to the system by the IOH.

The Figure 16-6 shows the logic diagram of the IOH global error registers.

Figure 16-5. IOH Error Logging and Reporting Example

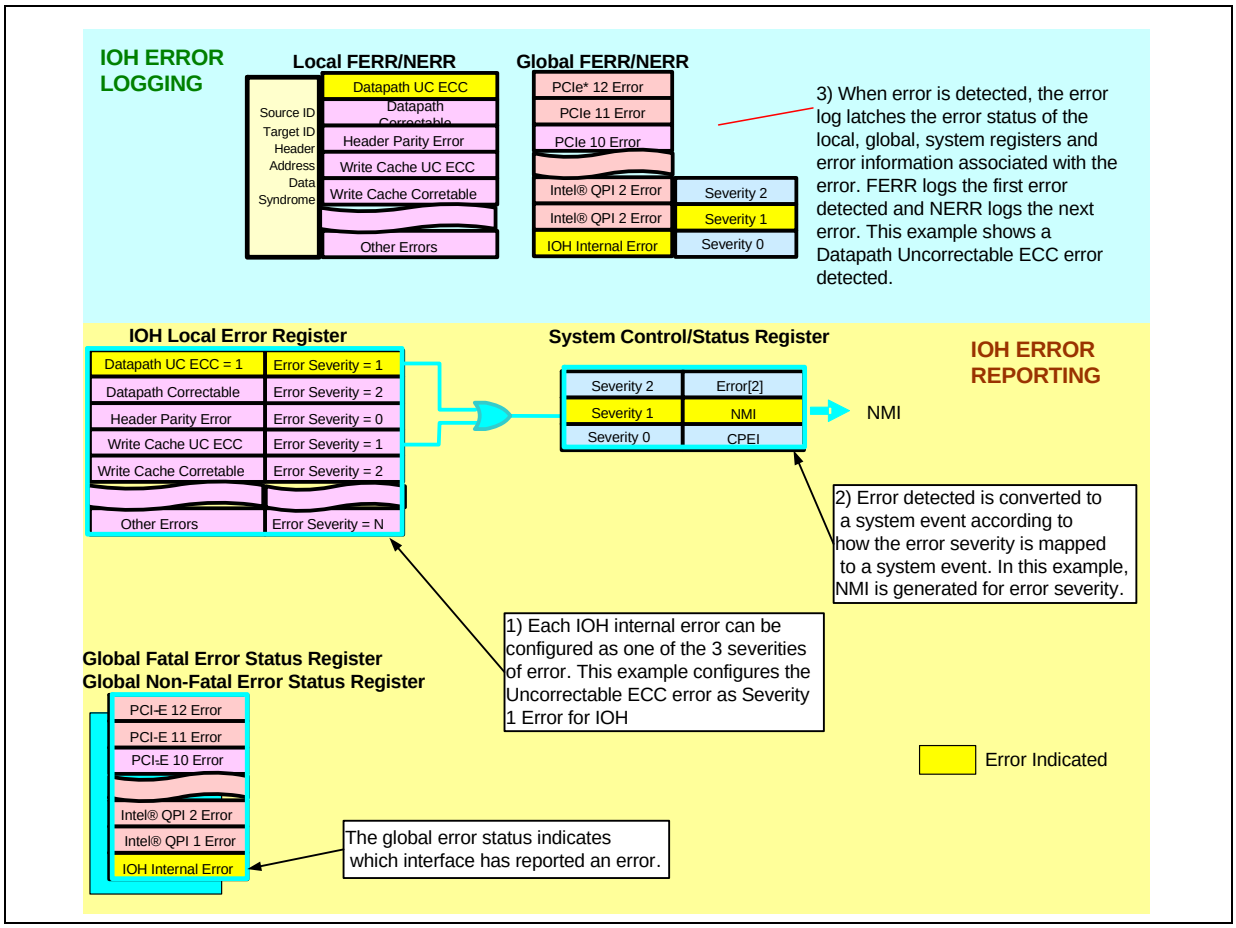

Figure 16-6. Global Error Logging and Reporting

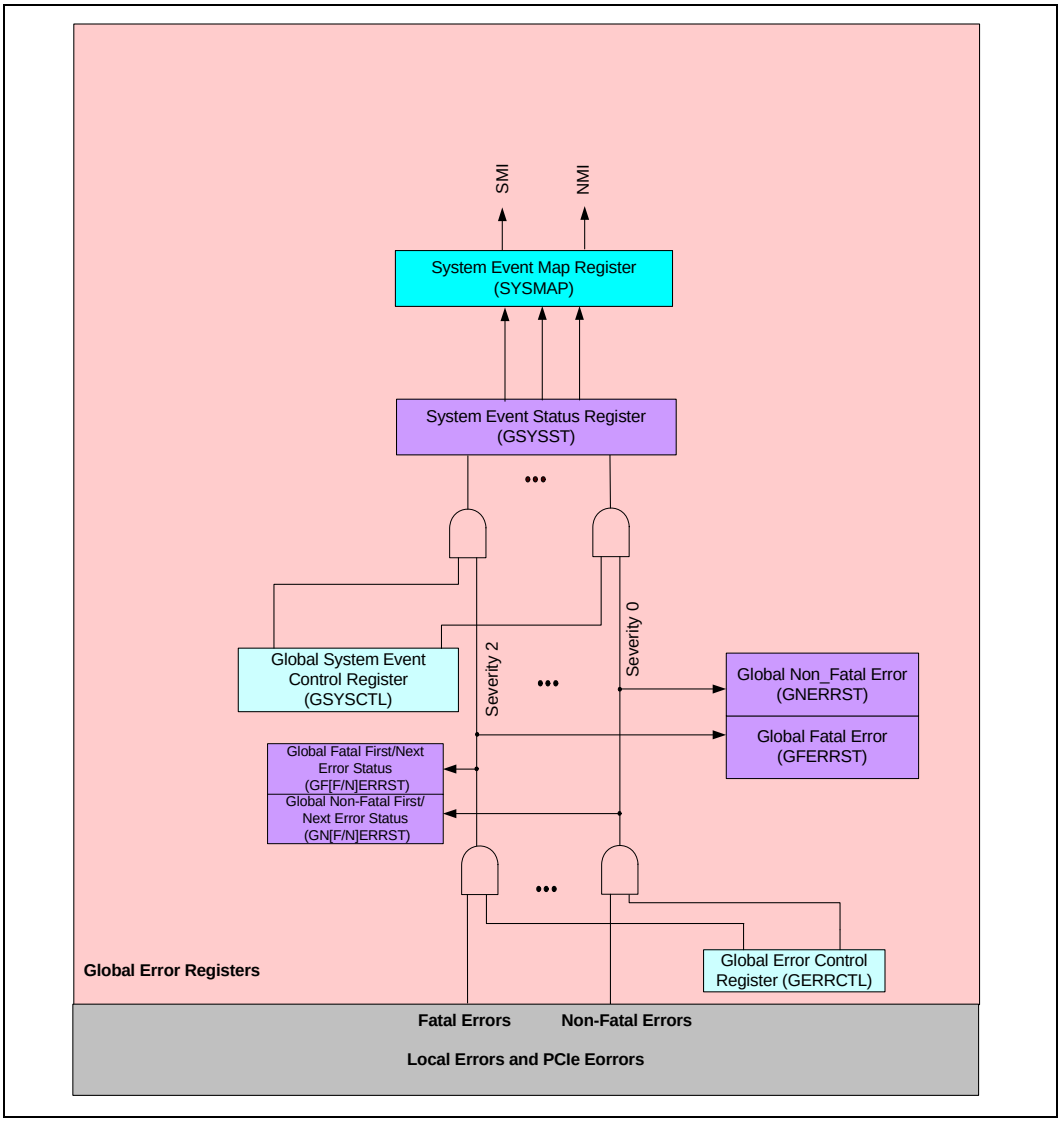

Figure 16-7. Thermalert and Thermtrip Signaling

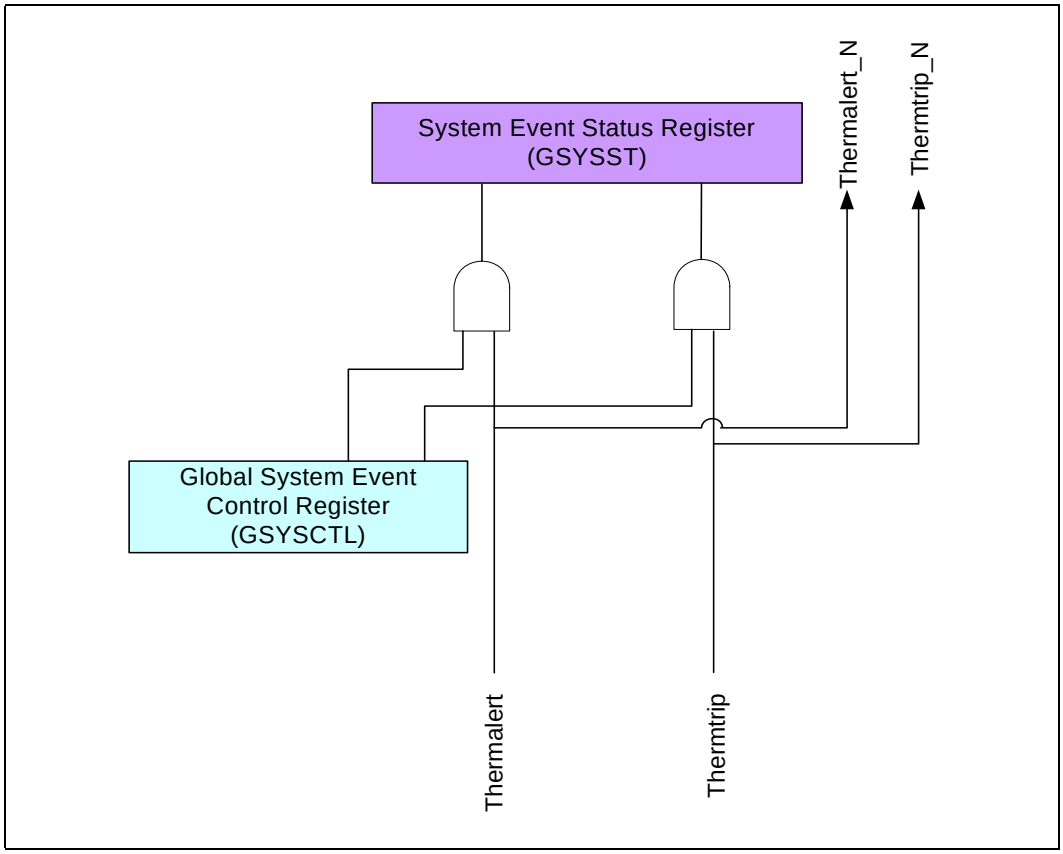

16.4.3.3 First and Next Error Log Registers

This section describe local error logging (for Intel QuickPath Interconnect, IOH core errors), and the global error logging. PCI Express specifies its own error logging mechanism which will not be described here. Refer to the *PCI Express Base Specification,* Revision 2.0 specification for details.

For error logging, IOH categorizes the detected errors into Fatal and Non-Fatal based on the error severity. Each category includes two sets of error logging – first error register (FERR) and next error register (NERR). FERR register stores the information associated with the first detected error, while NERR stores the information associated with the detected next errors after the first error. Both FERR and NERR logs the error status in the same format. They indicate errors that can be detected by the IOH in the format bit vector with one bit assigned to each error. First error event is indicated by setting the corresponding bit in the FERR status register, a next error(s) is indicated by setting the corresponding bit in the NERR register. In addition, the local FERR register also logs the ECC syndrome, address and header of the erroneous cycle. The FERR register indicates only one error, while the NERR register can indicate second error.

Once the first error and the next error have been indicated and logged, the log registers for that error remains valid until either 1) The first error bit is clear in the associated error status register, or 2) a powergood reset occurs. Software clears an error bit by writing 1 to the corresponding bit position in the error status register.

The hardware rules for updating the FERR and NERR registers and error logs are as follows:

1. First error event is indicated by setting the corresponding bit in the FERR status register, a next error is indicated by setting the corresponding bit in the NERR status register.
2. If the same error occurs before the FERR status register bit is cleared, it is not logged in the NERR status register.

   Note: There is exception for the Intel QuickPath Interconnect link layer and protocol layer, IOH core error logging. If the first error occurs again, it gets logged again into NERR status register.
3. If multiple error events, sharing the same error log registers, occur simultaneously, then highest error severity has priority over the others for FERR logging. The other errors are indicated in the NERR register.
4. Fatal error is of the highest priority, followed by Recoverable errors and then Correctable errors.
5. Updates to error status and error log registers appear atomic to the software.
6. Once the first error information is logged in the FERR log register, the logging of FERR log registers is disabled until the corresponding FERR error status is cleared by the software.
7. Error control registers are cleared by reset. Error status and log registers are cleared by the power-on reset only. The contents of error log registers are preserved across a reset (while PWRGOOD remains asserted)

16.4.4 Error Logging Summary

Figure 16-8 summarizes the error logging flow for the IOH. As illustrated in the flow chart, the left half depicts the local error logging flow, while the right half depicts the global error logging flow. The local and the global error logging are very similar to each other. Note that for simultaneous events, the IOH serializes the events with higher priority on more severe error.

Figure 16-8. IOH Error Logging Flow

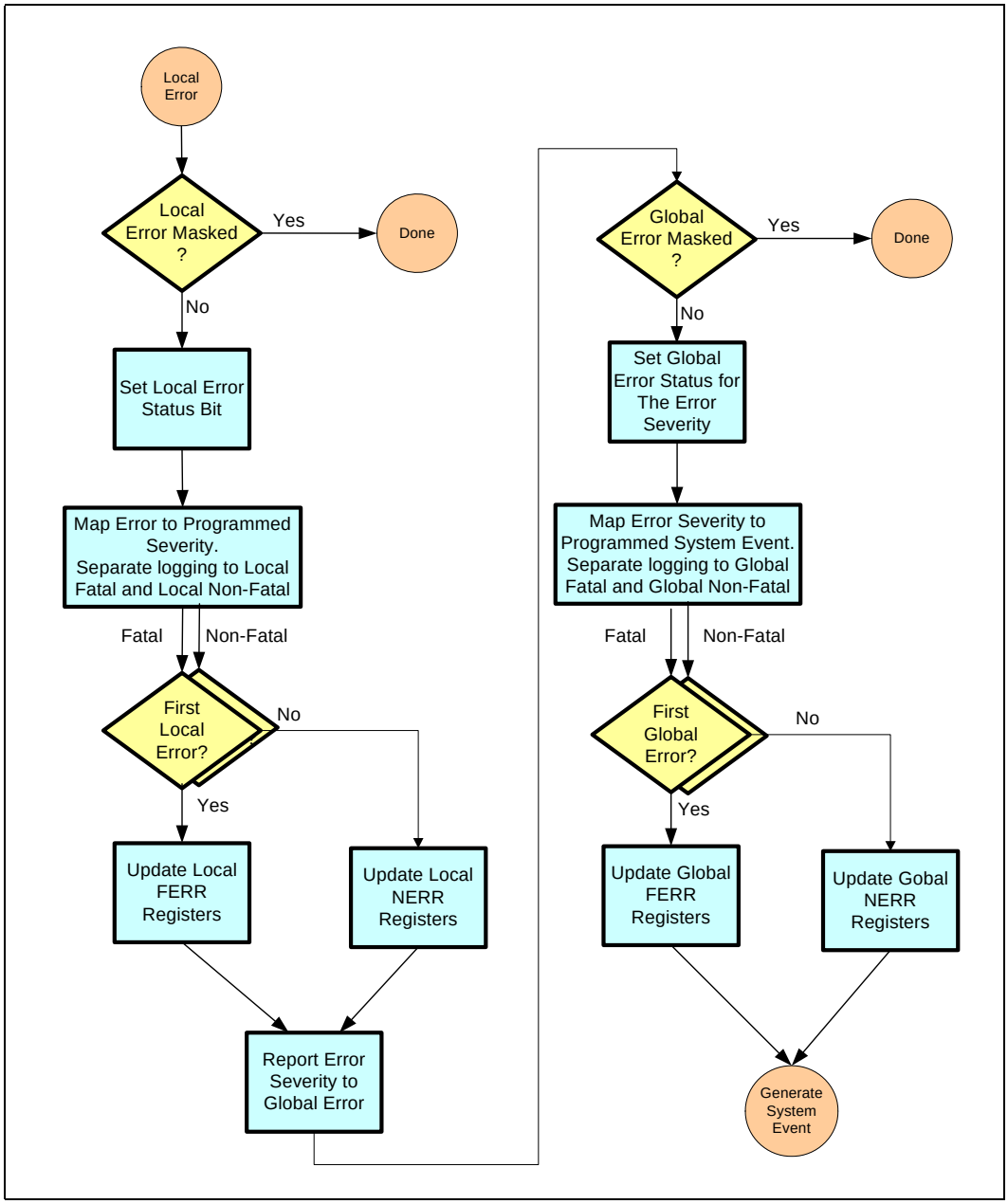

16.4.4.1 Error Registers Flow

1. Upon a detection of an unmasked local error, the corresponding local error status is set if the error is enabled; otherwise the error bit is not set and the error forgotten.
2. The local error is mapped to its associated error severity defined by the error severity map register. Setting of the local error status bit causes the logging of the error – Severity 0, 1 and 3 are logged in the local non-fatal FERR/NERR registers,

while severity 2 is logged in the local fatal FERR/NERR registers. PCIe errors are logged according to the *PCI Express Base Specification*.

3. The local FERR and NERR logging events are forwarded to the global FERR and NERR registers. The report of local FERR/NERR sets the corresponding global error bit if the global error is enabled; otherwise the global error bit is not set and the error forgotten. The global FERR logs the first occurrence of local FERR/NERR event in the IOH, while the global NERR logs the subsequent local FERR/NERR events.
4. Severity 0 and 1 are logged in the global non-fatal FERR/NERR registers, while severity 2 is logged in the global fatal FERR/NERR registers.
5. The global error register reports the error with its associated error severity to the system event status register. The system event status is set if the system event reporting is enabled for the error severity; otherwise the bit is not set and the error is not reported.
6. Setting of the system event bit triggers a system event generation according to the mapping defined in the system event map register. The associated system event is generated for the error severity and dispatched to the processor/BMC of the error (interrupt for processor or Error Pin for the BMC).
7. The global log and local log registers provide the information to identify the source of the error. Software can read the log registers and clear the global and local error status bits.
8. Since the error status bits are edge triggered, 0 to 1 transition is required to set the bit again. While the error status bit (local, global, or system event) is set to 1, all incoming error reporting to the respective error status register will be ignored (no 0 to 1 transition)
   a. For a write to clear the local error status bit, the local error register re-evaluates the OR output of its error bits and reports it to the global error register; however, if the global error bit is already set, then the report is ignored,
   b. For write to clear the global error status bit, the global error register re-evaluates the OR output of its error bits and reports it to the system event status register; however, if the system event status bit is already set, then the report is not generated
   c. Software can optionally mask or unmask the system event generation (interrupt or error pin) for an error severity in the system event control register while clearing the local and global error registers.
9. Software has the following options for clearing error status registers:
   a. Read global and local log registers to identify the source of the error. Clear local error bits -- this does not cause generation of an interrupt with the global bit still set. Then, clear global error bit and write to the local error register again with all 0s. Writing 0s to the local status does not clear any status bit, but will cause the re-evaluation of the error status bits. An error will be reported if there is any unclear local error bit.
   b. Read global and local log registers to identify the source of the error and mask the error reporting for the error severity. Clear system event and global error status bits -- this causes setting of the system event status bit if there are other global bits still set. Then clear local error status bits — this causes setting of the global error status bit if there are other local error bits still set. Then, unmask system event to cause IOH to report the error.
10. FERR logs the information of the first error detected by the associated error status register (local or global). FERR log remains unchanged until all bits in the respective error status register are cleared by the software. When all error bits are cleared, the FERR logging is reenabled.

Figure 16-9. Clearing Global and Local FERR / NERR Registers

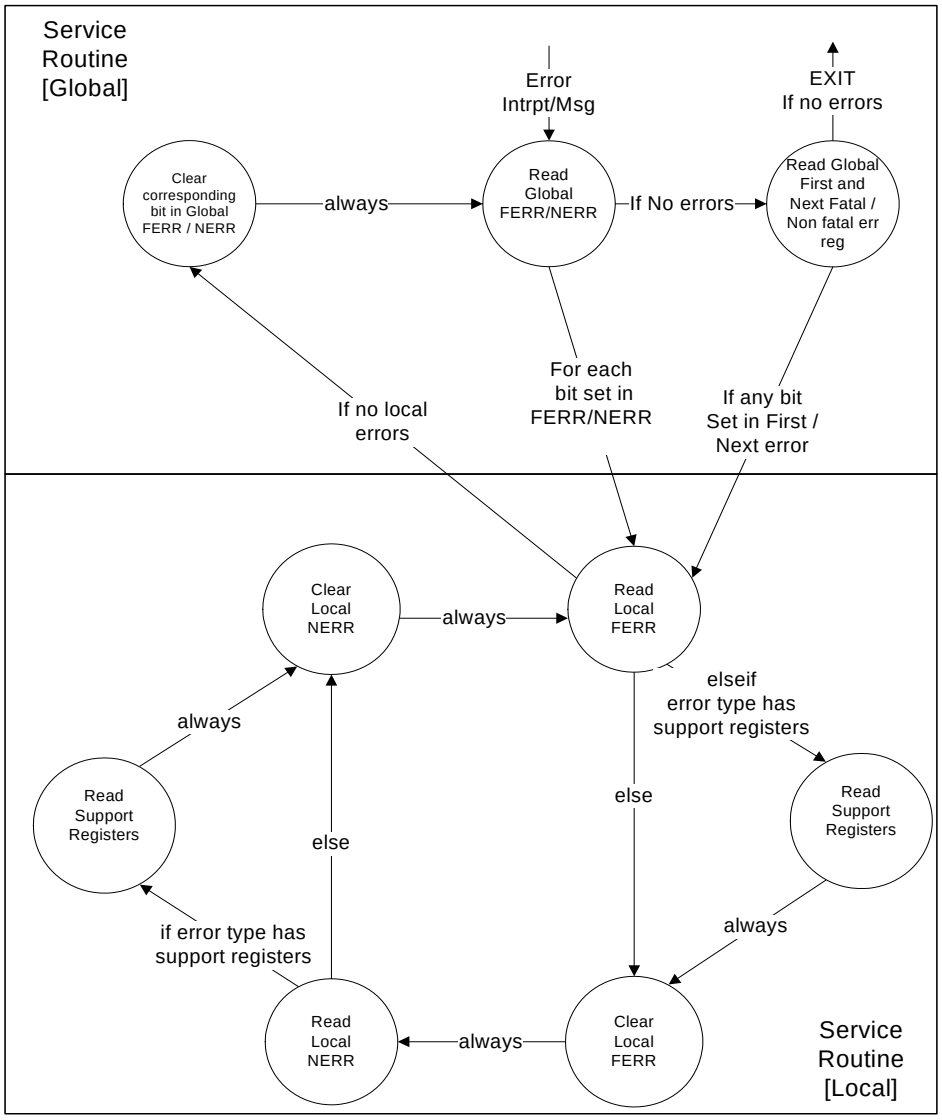

Note: In this figure, FERR and NERR are referred as fatal error and non-fatal errors.

16.4.4.2 Error Counters

This feature allows the system management controller to monitor the count of correctable errors. The error RAS structure already provides a first error status and a second error status. Because the response time of system management is on the order of milliseconds, it is not possible to detect short bursts of errors. Over an extended period of time, software uses these error counter values to monitor the rate of change in error occurrences and identify potential degradations, especially with respect to the memory interface.

16.4.4.2.1 Feature Requirements

A register with one-hot encoding will select which error types participate in error counting. The selection register will OR together all of the selected error types to form a single count enable. This means that only one increment of the counter will occur for one or all types selected. Register attributes are set to write 1 to clear.

Each cluster has one set of error counter/control registers.

- Each Intel QuickPath Interconnect port will contain one 7-bit counter (ERRCNT[6:0]).
  - Bit[7] is an overflow bit, all bits are sticky with a write logic 1 to clear.
- The IOH cluster (Core) contains one 7-bit counter (ERRCNT[6:0]).
  - Bit[7] is an overflow bit, all bits are sticky with a write logic 1 to clear.
- The Miscellaneous cluster (MI) contains one 7-bit counter (ERRCNT[6:0]).
  - Bit[7] is an overflow bit, all bits are sticky with a write logic 1 to clear.
- The Thermal Error cluster (THER) contains one 7-bit counter (ERRCNT[6:0]).
  - Bit[7] is an overflow bit, all bits are sticky with a write logic 1 to clear.

Table 16-1. Error Counter Register Locations

Cluster	Register Reference
Intel QuickPath Interconnect	Intel QuickPath Interconnect Error Counter Selection Register (QPI[1:0]ERRCNTSEL) Intel QuickPath Interconnect Error Counter Register (QPI[1:0]ERRCNT) Intel QuickPath Interconnect Protocol Error Counter Register (QPIP[1:0]ERRCNT)
Core IOH	IOH Error Counter Selection Register (IOHERRCNTSEL)
Miscellaneous	Miscellaneous Error Counter Selection Register (MIERRCNTLSEL)
Thermal Error	Thermal Error Counter Selection Register (THRERRCNTSEL)

16.4.4.3 Stop on Error

The System Event Map register selects the severity levels which activates the Stop on Error (Error Freeze). It requires a reset to clear the event or a configuration write (using JTAG or SMBus) to the stop on error bit in the selection register. Continued operation after Stop on Error is *not* guaranteed. See the System Event Map register (SYSMAP) in the Chapter 21, “SYSMAP: System Error Event Map Register” for details.

16.5 Intel QuickPath Interconnect Interface RAS

The following sections provide an overview of the Intel QuickPath Interconnect RAS features. The Intel QuickPath Interconnect RAS features are summarized as follows:

1. Link Level 8-bit or 16-bit CRC.
2. Dynamic link retraining and recovery on link failure.
3. Intel QuickPath Interconnect Error detection and logging.
4. Intel QuickPath Interconnect Error reporting.

16.5.1 Link Level CRC and Retry

Cyclic redundancy check (CRC) is a mechanism to ensure the data integrity of a serial stream. The sender of the data generates CRC based on the data pattern and a defined polynomial equation. The resulting CRC is a unique encoding for a specific data stream.

When the data arrives at the receiver, the receiver performs the same CRC calculation using the same polynomial equation. The CRCs are compared to detect bad data. When a CRC error is detected, the receiver will request the sender to retransmit the data. This action is termed “link level retry”, as it is performed by the Link layer logic. The Protocol layer is unaware of this action.

Intel QuickPath Interconnect uses 8 bit CRC per flit (72+8=80 bits), and 16 bit CRC over 2 flits for Intel QuickPath Interconnect packets. The CRC is capable of detecting 1, 2, 3 and odd number of bits in error and errors of burst length up to 8. Flits are logged in a retry buffer until acknowledgment is received. In case of error, the erroneous flit and all subsequent flits are retransmitted. Recovery from permanent partial link failure is supported through dynamic link width reduction (see Section 16.5.2).

In addition, the IOH tracks and logs link level retry in the error registers. A successful link level retry and successful link reduction is a correctable error, while repetitive retries without success and a link that cannot be further reduced is a fatal error. The flit that contained the error will be logged with 8-bit CRC. With a Rolling CRC (16-bit) failure, both flits contributing to the failed CRC are logged.

16.5.2 Intel QuickPath Interconnect Error Detection, Logging, and Reporting

The IOH implements Intel QuickPath Interconnect error detection and logging that follows the IOH local and global error reporting mechanisms described earlier in this chapter. These registers provide the control and logging of the errors detected on the Intel QuickPath Interconnect interface. IOH Intel QuickPath Interconnect error detection, logging, and reporting provides the following features:

- Error indication by interrupt (CPEI, MCA,SMI, NMI).
- Error indication by response status field in response packets.
- Error indication by data poisoning.
- Error indication by Viral.
- Error indication by Error pin.
- Hierarchical Time-out for fault diagnosis and FRU isolation.

16.6 PCI Express RAS

The *PCI Express Base Specification,* Revision 2.0 defines a standard set of error reporting mechanisms; the IOH supports the standard set, including error poisoning and Advanced Error Reporting. Any exceptions are called out where appropriate. PCI Express ports support the following features:

1. Link Level CRC and retry.
2. Dynamic link width reduction on link failure.
3. PCI Express Error detection and logging.
4. PCI Express Error reporting.

16.6.1 PCI Express* Link CRC and Retry

PCI Express supports link CRC and link level retry for CRC errors. Refer to the *PCI Express Base Specification,* Revision 2.0 for details.

16.6.2 Link Retraining and Recovery

The PCI Express interface provides a mechanism to recover from a failed link, and continue operating at a reduced link widths. The IOH supports PCI Express ports can operate in x16, x8, x4, x2, and x1 link widths. In case of a persistent link failure, the PCI Express link can degrade to a smaller link width in an attempt to recover from the error. A PCI Express x16 link can degrade to x8 link, a x8 link can fall back to a x4 link, a x4 to a x2 link, and then to a x1 link. Refer to the *PCI Express Base Specification,* Revision 2.0 for further details.

16.6.3 PCI Express Error Reporting Mechanism

The IOH supports the standard and advanced PCIe error reporting for its PCIe ports. The IOH PCI Express ports are implemented as root ports. Refer to the *PCI Express Base Specification,* Revision 2.0 for the details of PCIe error reporting. The following sections highlight the important aspects of the PCI Express error reporting mechanisms.

16.6.3.1 PCI Express Error Severity Mapping in IOH

Errors reported to the IOH PCI Express root port can optionally signal to the IOH global error logic according to their severities through the programming of the PCI Express root control register (ROOTCON). When system error reporting is enabled for the specific PCI Express error type, the IOH maps the PCI Express error to the IOH error severity and reports it to the global error status register. PCI Express errors can be classified as two types: Uncorrectable errors and Correctable errors. Uncorrectable errors can further be classified as Fatal or Non-Fatal. This classification is compatible and mapped with the IOH's error classification: Correctable as Correctable, Non-Fatal as Recoverable, and Fatal as Fatal.

16.6.3.2 Unsupported Transactions and Unexpected Completions

If the IOH receives a legal PCI Express defined packet that is not included in PCI Express supported transactions, the IOH treats that packet as an unsupported transaction and follows the PCI Express rules for handling unsupported requests. If the IOH receives a completion with a requester ID set to the root port requester ID and there is no matching request outstanding, it is considered an "Unexpected Completion". The IOH also detects malformed packets from PCI Express and reports them as errors per the PCI Express Base Specification Revision 1.0a rules.

If the IOH receives a Type 0 Intel Vendor-Defined message that terminates at the root complex and that it does not recognize as a valid Intel-supported message, the message is handled by IOH as an Unsupported Request with appropriate error escalation (as defined in express spec). For Type 1 Vendor-Defined messages which terminate at the root complex, the IOH simply discards the message with no further action.

16.6.3.3 Error Forwarding

PCIe supports Error Forwarding, or Data Poisoning. This feature allows a PCI Express device to forward data errors across an interface without it being interpreted as an error originating on that interface.

The IOH forwards the poison bit from Intel QuickPath Interconnect to PCIe, PCIe to Intel QuickPath Interconnect and between PCIe ports on peer to peer. Poisoning is accomplished by setting the EP bit in the PCIe TLP header.

16.6.3.4 Unconnected Ports

If a transaction targets a PCI Express link that is not connected to any device, or the link is down (DL_Down status), the IOH treats it as a master abort situation. This is required for PCI bus scans to non-existent devices to go through without creating any other side effects. If the transaction is non-posted, IOH synthesizes an Unsupported Request response status (if non-posted) back to any PCIe requester targeting the down link or returns all Fs on reads and a successful completion on writes to any Intel® QuickPath Interconnect requester targeting the down link. Note that software accesses to the root port registers corresponding to a down PCIe interface does not generate an error.

16.6.3.5 PCI Express Error Reporting Specifics

Refer to *PCI Express Base Specification Rev 1.1, post 1.1 Erratas and EC*'s* for details of root complex error reporting. Here is a summary of root port 'system event' reporting. Figure 16-10 provides a summary of system event reporting to IOH global error an PCI Express interface error. Refer to Section 21.13 for registers and descriptions. Table 16-10 and Table 16-11 illustrate the error logging and report mechanism.

Figure 16-10.Error Signaling to IOH Global Error Logic on a PCI Express Interface Error

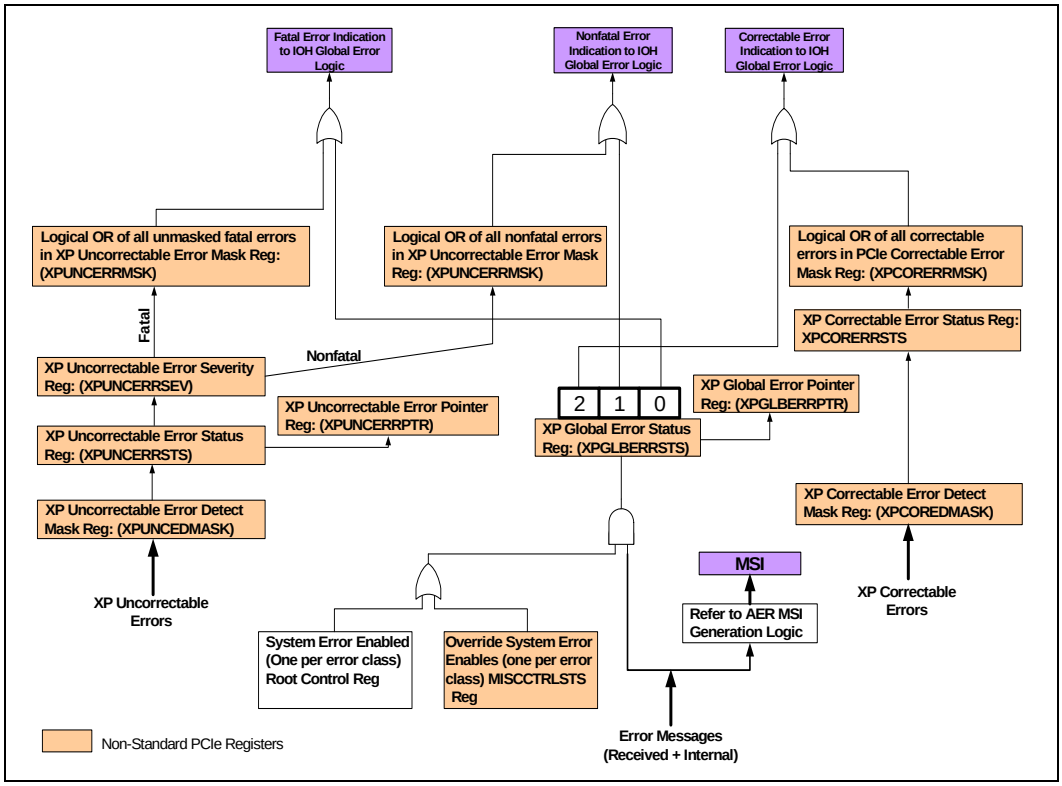

Figure 16-11.PCI Express Error Standard

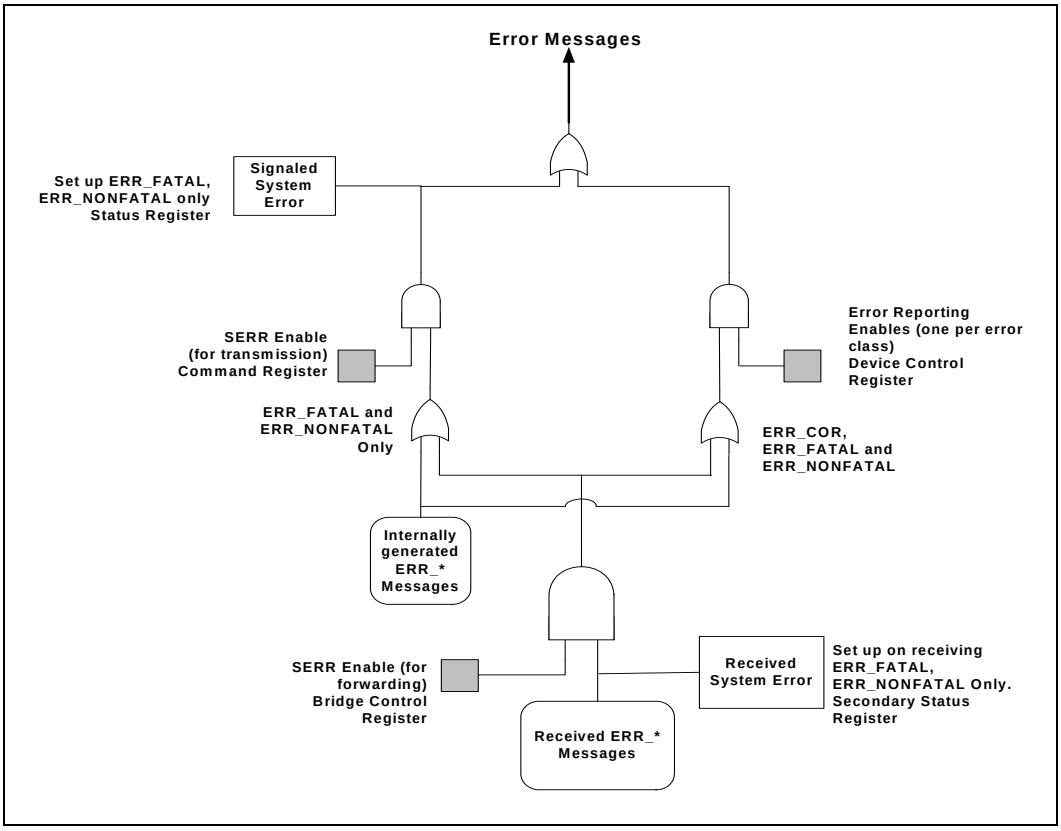

16.7 IOH Error Handling Summary

The following tables provide a summary of the errors that are monitored by the IOH. The IOH provides a flexible mechanism for error reporting. Software can arbitrarily assign an error to an error severity, and associate the error severity with a system event. Depending on which error severity is assigned by software, the error is logged either in fatal or non-fatal error log registers. Each error severity can be mapped to one of the inband report mechanism as shown in Table 16-2, or generate no inband message at all. In addition, each severity can enable/disable the assertion of its associated error pin for outband error report (for example, severity 0 error triggers Error[0], severity 1 triggers Error[1],..., and so forth). Table 16-2 shows the default error severity mapping in the IOH and how each error severity is reported, while Table 16-3 summarizes the default logging and responses on the IOH detected errors.

Note: Each error's severity (and therefore, which error registers log the error) is programmable and therefore, the error logging registers used for the error could be different from what is indicated in Table 16-3.

Table 16-2. IOH Default Error Severity Map

Error Severity	IOH	Intel® QuickPath Interconnect	PCI Express	Inband Error Reporting (programmable)
0	Hardware Correctable Error	Hardware Correctable Error	Correctable Error	NMI/SMI/MCA/CPEI
1	Recoverable Error	Recoverable Error	Non-Fatal Error	NMI/SMI/MCA/CPEI
2	Fatal Error	Unrecoverable Error	Fatal Error	NMI/SMI/MCA/CPEI

Table 16-3.IOH Error Summary (Sheet 1 of 13)

ID	Error	Default Error Severity	Transaction Response	Default Error Logging[1]
IOH Core Errors				
C4	Master Abort Address Error	1	IOH Sends completion with MA status and log the error	FERR/NERR is logged in IOH Core and Global Non-Fatal Error Log Registers: IOHNFERRST IOHNFERRHD IOHNNERRST GNERRST GNFERRST GNFERRTIME GNNERRST IOH core header is logged
C5	Completer Abort Address Error		IOH sends completion with CA status and logs the error.	
C6	FIFO Overflow/ Underflow error	1	IOH logs the Error	FERR/NERR is logged in IOH Core and Global Non-Fatal Error Log Registers: IOHNFERRST IOHNFERRHD IOHNNERRST GNERRST GNFERRST GNFERRTIME GNNERRST IOH core header is not logged
Miscellaneous Errors				
20	IOH Configuration Register Parity Error (not including Intel QuickPath Interconnect, PCIe registers which are covered elsewhere)	0	No Response – This error is not associated with a cycle. IOH detects and logs the error.	FERR/NERR is logged in Miscellaneous and Global Fatal Error Log Registers: MIFFERRST MIFNERRST GFERRST GFFERRST GFFERRTIME GFNERRST No header is logged.

Table 16-3.IOH Error Summary (Sheet 2 of 13)

ID	Error	Default Error Severity	Transaction Response	Default Error Logging[1]
21	Persistent SMBus retry failure.	0	No Response – This error is not associated with a cycle. IOH detects and logs the error.	FERR/NERR is logged in Miscellaneous and Global Fatal Error Log Registers: MIFFERRST MIFFERRHD MIFNERRST GFERRST GFFERRST GFFERRTIME GFNERRST No header is logged for this error
22	Persistent JTAG error.			
23	Virtual Pin Port Error. (IOH encountered persistent VPP failure. The VPP is unable to operate.)			
24	Reserved			
			PCIe Errors	
70	PCIe Receiver Error	0	Respond per PCI Express specification	Log error per PCI Express AER requirements for these correctable errors/message. Log in XPGLBERRSTS, XPGLBERRPTR registers If PCIe correctable error is forwarded to the global error registers, it is logged in global non-fatal log registers – GNERRST, GNFERRST, GNNERRST, GNFERRTIME
71	PCIe Bad TLP			
72	PCIe Bad DLLP			
73	PCIe Replay Time-out			
74	PCIe Replay Number Rollover			
75	Received ERR_COR message from downstream device			
76	PCIe Link Bandwidth changed		No Response – This error is not associated with a cycle. IOH detects and logs the error.	Log per 'Link bandwidth change notification mechanism' ECN Log in XPCORERRSTS register. If error is forwarded to the global error registers, it is logged in global non-fatal log registers – GNERRST, GNFERRST, GNNERRST, GNFERRTIME
80	Received 'Unsup-ported Request' completion status from downstream device	1	Intel QuickPath Interconnect to PCIe read: IOH returns all '1s' and normal response to Intel QuickPath Inter-connect to indicate master abort Intel QuickPath Interconnect to PCIe NP write: IOH returns normal response PCIe to PCIe read/NP-write: 'Unsup-ported request' is returned[2] to original PCIe requester. SMBus/Jtag accesses: IOH returns 'UR' response status on smbus/jtag	Log in XPUNCERRSTS register If error is forwarded to the global error registers, it is logged in global non-fatal log registers – GNERRST, GNFERRST, GNNERRST, GNFERRTIME

Table 16-3.IOH Error Summary (Sheet 3 of 13)

ID	Error	Default Error Severity	Transaction Response	Default Error Logging[1]
81	IOH encountered a PCIe 'Unsupported Request' condition, on inbound address decode with the exception of SAD miss (see C6 for SAD miss), and those covered by entry#11. See Table 5-4		PCIe read: 'Unsupported request' completion is returned on PCIe PCIe non-posted write: 'Unsupported request' completion is returned on PCIe. The write data is dropped PCIe posted write: IOH drops the write data.	Log error per PCI Express AER requirements for unsupported request. All accesses above address 2^51 are logged as UR. In addition Memory reads above 2^51 are considered Advisory when UR severity is set to non-fatal. Memory writes in the range 2^51 to 2^52 are also considered advisory, while Memory writes above 2^52 are considered non-fatal, when UR severity is set to non-fatal. Log in XPGLBERRSTS, XPGLBERRPTR registers If PCIe uncorrectable error is forwarded to the global error registers, it is logged in global non-fatal log registers – GNERRST, GNFERRST, GNNERRST, GNFERRTIME
82	Received 'Completer Abort' completion status from downstream device		Intel QuickPath Interconnect to PCIe read: IOH returns all '1s' and normal response to Intel QuickPath Inter-connect. Intel QuickPath Interconnect to PCIe NP write: IOH returns normal response. PCIe to PCIe read/NP-write: 'Completer Abort' is returned[3] to original PCIe requester. SMBus/Jtag accesses: IOH returns 'CA' response status on smbus/jtag	Log in XPUNCERRSTS register If error is forwarded to the global error registers, it is logged in global non-fatal log registers – GNERRST, GNFERRST, GNNERRST, GNFERRTIME
83	IOH encountered a PCIe 'Completer Abort' condition, on inbound address decode. SeeTable 5-4		PCIe read: 'Completer Abort' completion is returned on PCIe PCIe non-posted write: 'Completer Abort' completion is returned on PCIe. The write data is dropped PCIe posted write: IOH drops the write data.	Log error per PCI Express AER requirements for completer abort.[4] Log in XPGLBERRSTS, XPGLBERRPTR registers If PCIe uncorrectable error is forwarded to the global error registers, it is logged in global non-fatal log registers – GNERRST, GNFERRST, GNNERRST, GNFERRTIME

Table 16-3.IOH Error Summary (Sheet 4 of 13)

ID	Error	Default Error Severity	Transaction Response	Default Error Logging[1]
84	Completion time-out on NP transactions outstanding on PCI Express/ESI	1	Intel QuickPath Interconnect to PCIe read: IOH returns normal response to Intel QuickPath Interconnect and all 1's for read data Intel QuickPath Interconnect to PCIe non-posted write: IOH returns normal response to Intel QuickPath Inter-connect PCIe to PCIe read/non-posted write: UR[2] is returned on PCIe SMBus/Jtag reads: IOH returns a UR status on SMbus/jtag	Log error per PCI Express AER requirements for the corresponding error. Log in XPGLBERRSTS, XPGLBERRPTR registers If PCIe uncorrectable error is forwarded to the global error registers, it is logged in global non-fatal log registers – GNERRST, GNFERRST, GNNERRST, GNFERRTIME Note: a) A poisoned TLP received from PCIE is always treated as advisory-nonfatal error, if the associated severity is set to nonfatal. b) When a poisoned TLP is transmitted down a PCIe link, the IOH does not log that condition in the AER registers.
85	Received PCIe Poisoned TLP		Intel QuickPath Interconnect to PCIe read: IOH returns normal response and poisoned data to Intel QuickPath Interconnect, if Intel QuickPath Inter-connect profile supports poisoned data. Otherwise, packet is dropped and no response sent on Intel QuickPath Interconnect. PCIe to Intel QuickPath Interconnect write: IOH forwards poisoned indication to Intel QuickPath Inter-connect, if Intel QuickPath Inter-connect profile supports poisoned data. Otherwise, write is dropped. PCIe to PCIe read: IOH forwards completion with poisoned data to original requester, if the root port in the outbound direction for the completion packet, is not in 'Stop and Scream' mode. If the root port is in 'Stop and scream' mode, the packet is dropped and the link is brought down immediately (that is, no packets on or after the poisoned data is allowed to go to the link). PCIe to PCIe posted/non-posted write: IOH forwards write with poisoned data to destination link, if the root port of the destination link, is not in 'Stop and Scream' mode. If the root port is in 'Stop and scream' mode, the packet is dropped and the link is brought down immediately (that is, no packets on or after the poisoned data is allowed to go to the link) and a UR[2] response is returned to the original requester, if the request is non-posted. SMBus/Jtag to IOH accesses requests: IOH returns a UR response status on smbus/jtag	
86	Received PCIe unexpected Completion		Respond Per PCIe Specification	Log error per PCI Express AER requirements for the corresponding error/message. Log in XPGLBERRSTS, XPGLBERRPTR registers If PCIe uncorrectable error is forwarded to the global error registers, it is logged in global non-fatal log registers – GNERRST, GNFERRST, GNNERRST, GNFERRTIME
87	PCIe Flow Control Protocol Error[5]			
88	Received ERR_NONFATAL Message from downstream device			

Table 16-3.IOH Error Summary (Sheet 5 of 13)

ID	Error	Default Error Severity	Transaction Response	Default Error Logging[1]
90	PCIe Malformed TLP[5]	2	Respond Per PCIe Specification	Log error per PCI Express AER requirements for the corresponding error/message. Log in XPGLBERRSTS, XPGLBERRPTR registers If PCIe uncorrectable error is forwarded to the global error registers, it is logged in global non-fatal log registers – GFERRST, GFFERRST, GFNERRST, GFFERRTIME
91	PCIe Data Link Protocol Error[5]			
92	PCIe Receiver Overflow			
93	Surprise Down			
94	Received ERR_FATAL message from downstream device			
98	MSI writes greater than a DWORD	2	Drop the transaction	Log in XPUNCERRSTS register If error is forwarded to the global error registers, it is logged in global non-fatal log registers – GFERRST, GFFERRST, GFNERRST, GFFERRTIME
Intel VT-d				
A1	All faults except ATS spec defined CA faults (refer to Intel VT-d spec for complete details)	1	Unsupported Request response for the associated transaction on the PCI Express interface	Error logged in Intel VT-d Fault Record register. Error logged in XPGLBERRSTS and XPGLBERRPTR registers. Error logging also happens (on the GPA address) per the PCI Express AER mechanism (address logged in AER is the GPA). Errors can also be routed to the IOH global error logic and logged in the global non-fatal registers GNERRST GNFERRST GNFERRTIME GNNERRST
A2	ATS spec defined CA faults (refer to Intel VT-d spec for complete details)	1	Completer Abort response for the associated transaction on the PCI Express interface	Error logged in Intel VT-d fault record register Error also logged in the VTUNCERRSTS and in VTUNCERRPTR registers. Error logging also happens (on the GPA address) per the PCI Express AER mechanism (address logged in AER is the GPA). Errors can also be routed to the IOH global error logic and logged in the global non-fatal registers GFERRST GFFERRST GFFERRTIME GFNERRST
A3	Fault Reason Encoding 0xFF – Miscellaneous errors that are fatal to Intel VT-d unit operation (for example, parity error in an Intel VT-d cache)	2	Drop the transaction. Continued operation of IOH is not guaranteed.	Error logged in Intel VT-d fault record register Error also logged in the VTUNCERRSTS and in VTUNCERRPTR registers. These errors can also be routed to the IOH global error logic and logged in the global fatal registers GFERRST GFFERRST GFFERRTIME GFNERRST

Table 16-3.IOH Error Summary (Sheet 6 of 13)

ID	Error	Default Error Severity	Transaction Response	Default Error Logging[1]
A4	Data parity error while doing a context cache look up	2		Log in VTUNCERRSTS and VTUNCERRPTR registers These errors can also be routed to the IOH global error logic and logged in the global fatal registers. GFERRST GFFERRST GFFERRTIME GFNERRST
A4	Data parity error while doing a L1 lookup	2		Log in VTUNCERRSTS and VTUNCERRPTR registers These errors can also be routed to the IOH global error logic and logged in the global fatal registers GFERRST GFFERRST GFFERRTIME GFNERRST
A4	Data parity error while doing a L2 lookup	2		Log in VTUNCERRSTS and VTUNCERRPTR registers These errors can also be routed to the IOH global error logic and logged in the global fatal registers GFERRST GFFERRST GFFERRTIME GFNERRST
A4	Data parity error while doing a L3 lookup	2		Log in VTUNCERRSTS and VTUNCERRPTR registers. These errors can also be routed to the IOH global error logic and logged in the global fatal registers. GFERRST GFFERRST GFFERRTIME GFNERRST
A4	TLB0 parity error	2		Log in VTUNCERRSTS and VTUNCERRPTR registers These errors can also be routed to the IOH global error logic and logged in the global fatal registers. GFERRST GFFERRST GFFERRTIME GFNERRST
A4	TLB1 parity error	2		Log in VTUNCERRSTS and VTUNCERRPTR registers. These errors can also be routed to the IOH global error logic and logged in the global fatal registers. GFERRST GFFERRST GFFERRTIME GFNERRST

Table 16-3.IOH Error Summary (Sheet 7 of 13)

ID	Error	Default Error Severity	Transaction Response	Default Error Logging[1]
A4	Unsuccessful status received in CSI read completion	1		Log in VTUNCERRSTS and VTUNCERRPTR registers. These errors can also be routed to he IOH global error logic and logged in the global non-fatal registers GNERRST GNFERRST GNFERRTIME GNNERRST
A4	Protected memory region space violated	2		Log in VTUNCERRSTS and VTUNCERRPTR registers These errors can also be routed to the IOH global error logic and logged in the global fatal registers GFERRST GFFERRST GFFERRTIME GFNERRST
Intel QuickPath Interconnect Errors				
B0	Intel QuickPath Interconnect Link Layer detected CRC error – Successful Link Level Retry and Unsuccessful Link Level Retry (entered LLR abort state)	0	IOH processes and responds the cycle as normal.	FERR/NERR is logged in Intel QuickPath Interconnect and Global Non-Fatal Error Log Registers: QPINFERRST QPINNERRST GNERRST GNFERRST GNFERRTIME GNNERRST No header is logged for this error
B1	Intel QuickPath Interconnect Link Layer detected CRC error -- Successful Link Level Retry after PHY reinit	0	IOH processes and responds the cycle as normal	FERR/NERR is logged in Intel QuickPath Interconnect and Global Non-Fatal Error Log Registers: QPINFERRST QPINNERRST GNERRST GNFERRST GNFERRTIME GNNERRST No header is logged for this error
B2	Intel QuickPath Interconnect Physical Layer Detected an Intel QuickPath Interconnect Inband Reset (either received or driven by the IOH) and re-initialization completed successfully	0	No Response – This event is not associated with a cycle. IOH detects and logs the event.	FERR/NERR is logged in Intel QuickPath Interconnect and Global Non-Fatal Error Log Registers and Intel QuickPath Interconnect Physical layer register: QPINFERRST QPINNERRST GNERRST GNFERRST GNFERRTIME GNNERRST QPIPHPIS

Table 16-3.IOH Error Summary (Sheet 8 of 13)

ID	Error	Default Error Severity	Transaction Response	Default Error Logging[1]
B3	Intel QuickPath Interconnect Protocol Layer Received CPEI message from Intel QuickPath Interconnect (see Chapter 8, "Interrupts" for detailed flow).	0	No Response ***Note:*** This is really not an error condition but exists for monitoring by an external management controller.	FERR/NERR is logged in Intel QuickPath Interconnect and Global Non-Fatal Error Log Registers and Intel QuickPath Interconnect Physical layer register: QPINFERRST QPINNERRST GNERRST GNFERRST GNFERRTIME GNNERRST QPIPHPIS
B4	Intel QuickPath Interconnect Write Cache Detected ECC Correctable Error	0	IOH processes and responds the cycle as normal	FERR/NERR is logged in Intel QuickPath Interconnect and Global Non-Fatal Error Log Registers: QPIPNFERRST QPIPNNERRST GNERRST GNFERRST GNFERRTIME GNNERRST No header is logged for this error
B5	Potential spurious CRC error on L0s/L1 exit	1	In the event CRC errors are detected by link layer during L0s/L1 exit, it will be logged as "Potential spurious CRC error on L0s/L1 exit". IOH processes and responds the cycle as normal	FERR/NERR is logged in Intel QuickPath Interconnect and Global Non-Fatal Error Log Registers and Intel QuickPath Interconnect Link layer register: QPINFERRST QPINNERRST GNERRST GNFERRST GNFERRTIME GNNERRST
B6	Intel QPI Link Layer CRC error	0	In the event CRC errors are detected by link layer, it will be logged as "QPI Link Layer CRC error". IOH processes and responds the cycle as normal	FERR/NERR is logged in Intel QuickPath Interconnect and Global Non-Fatal Error Log Registers and Intel QuickPath Interconnect Link layer register: QPINFERRST QPINNERRST GNERRST GNFERRST GNFERRTIME GNNERRST

Table 16-3.IOH Error Summary (Sheet 9 of 13)

ID	Error	Default Error Severity	Transaction Response	Default Error Logging[1]
C0	Intel QuickPath Interconnect Link Layer Detected CRC error -- Unsuccessful Link Level Retry (entered LLR abort state)	2	Link goes down and ORB timeout occurs.	FERR/NERR is logged in Intel QuickPath Interconnect and Global Non-Fatal Error Log Registers: QPINFERRST QPINNERRST QPIFERRFLIT GNERRST GNFERRST GNFERRTIME GNNERRST No header is logged for this error
C1	Intel QuickPath Interconnect Protocol Layer Received Poisoned packet	1	Intel QuickPath Interconnect to PCIe write: IOH returns normal response to Intel QuickPath Interconnect and forwards poisoned data to PCIe. Intel QuickPath Interconnect to IOH write: IOH returns normal response to Intel QuickPath Interconnect and drops the write data. PCIe to Intel QuickPath Interconnect read: IOH forwards the poisoned data to PCIe IOH to Intel QuickPath Interconnect read: IOH drops the data. IOH to Intel QuickPath Interconnect read for RFO: IOH completes the write. If the bad data chunk is not overwritten, IOH corrupts write cache ECC to indicate the stored data chunk (64-bit) is poisoned.	FERR/NERR is logged in Intel QuickPath Interconnect and Global Non-Fatal Error Log Registers: QPIPNFERRST QPIPNFERRHD QPIPNNERRST GNERRST GNFERRST GNFERRTIME GNNERRST Intel QuickPath Interconnect header is logged
C2	IOH Write Cache uncorrectable Data ECC error	1	Write back includes poisoned data.	FERR/NERR is logged in Intel QuickPath Interconnect and Global Fatal Error Log Registers: QPIPFNFERRST QPIPFNERRST GNERRST GNFERRST GNFERRTIME GNNERRST
C3	IOH CSR access crossing 32-bit boundary	1	Intel QuickPath Interconnect read: IOH returns all '1s' and normal response to Intel QuickPath Interconnect to indicate master abort Intel QuickPath Interconnect write: IOH returns normal response and drops the write	FERR/NERR is logged in IOH Core and Global Non-Fatal Error Log Registers: QPIPNFERRST QPIPNFERRHD QPIPNNERRST GNERRST GNFERRST GNFERRTIME GNNERRST Intel QuickPath Interconnect header is logged

Table 16-3.IOH Error Summary (Sheet 10 of 13)

ID	Error	Default Error Severity	Transaction Response	Default Error Logging[1]
C7	Intel QuickPath Interconnect Physical Layer Detected a Intel QuickPath Interconnect Inband Reset (either received or driven by the IOH) and re-initialization completed successfully but width is changed	1	No Response -- This event is not associated with a cycle. IOH detects and logs the event.	FERR/NERR is logged in Intel QuickPath Interconnect and Global Non-Fatal Error Log Registers and Intel QuickPath Interconnect physical layer register: QPINFERRST QPINNERRST GNERRST GNFERRST GNFERRTIME GNNERRST QPIPHPIS
D0	Intel QuickPath Interconnect Physical Layer Detected Drift Buffer Alarm	2	No Response – This error is not associated with a cycle. IOH detects and logs the error.	FERR/NERR is logged in Intel QuickPath Interconnect and Global Fatal Error Log Registers, and Intel QuickPath Interconnect Physical layer CSRs: QPIFFERRST QPIFNERRST GFERRST GFFERRST GFFERRTIME GFNERRST No header logged for this error
D1	Intel QuickPath Interconnect Physical Layer Detected Latency Buffer Rollover (Only supported for tester determinism)			
D2	Intel QuickPath Interconnect Physical Layer Initialization Failure			
D3	Intel QuickPath Interconnect Link Layer Detected Control Error (Buffer Overflow or underflow, illegal or unsupported LL control encoding, credit underflow)	2	No Response – This error is not associated with a cycle. IOH detects and logs the error.	FERR/NERR is logged in Intel QuickPath Interconnect and Global Fatal Error Log Registers: QPIFFERRST QPIFNERRST GFERRST GFFERRST GFFERRTIME GFNERRST No header logged for this error
D4	Intel QuickPath Interconnect Parity Error (Link or Physical layer)	2	No Response – This error is not associated with a cycle. IOH detects and logs the error.	FERR/NERR is logged in Intel QuickPath Interconnect and Global Fatal Error Log Registers: QPIFFERRST QPIFNERRST GFERRST GFFERRST GFFERRTIME GFNERRST

Table 16-3.IOH Error Summary (Sheet 11 of 13)

ID	Error	Default Error Severity	Transaction Response	Default Error Logging[1]
D5	Intel QuickPath Interconnect Protocol Layer Detected Time-out in ORB	2	Intel QuickPath Interconnect read: return completer abort. Intel QuickPath Interconnect non-posted write: IOH returns completer abort Intel QuickPath Interconnect posted write: no action	FERR/NERR is logged in Intel QuickPath Interconnect and Global Fatal Error Log Registers: QPIPFFERRST QPIPFFERRHD QPIPFNERRST GFERRST GFFERRST GFFERRTIME GFNERRST Intel QuickPath Interconnect header is logged
D6	Intel QuickPath Interconnect Protocol Layer Received Failed Response			
D7	Intel QuickPath Interconnect Protocol Layer Received Unexpected Response/Completion	2	Drop Transaction, No Response. This will cause time-out in the requester.	FERR/NERR is logged in Intel QuickPath Interconnect and Global Fatal Error Log Registers: QPIPFFERRST QPIPFFERRHD QPIPFNERRST GFERRST GFFERRST GFFERRTIME GFNERRST Intel QuickPath Interconnect header is logged
D8	Intel QuickPath Interconnect Protocol Layer Received illegal packet field or incorrect target Node ID			
D9	Intel QuickPath Interconnect protocol received Viral indication in the Intel QuickPath Interconnect Packet.	2	The Intel QuickPath Interconnect port become viral causing all subsequent packets, sent or received, to have viral set. Outbound request to PCIe will be dropped and a Failed Response sent to the originating Intel QPI agent. If the request to PCIe is initiated by the SMBus agent, it proceeds as normal. Inbound read completions will be converted to completer abort. Inbound writes are either dropped or forwarded.	FERR/NERR is logged in Intel QuickPath Interconnect and Global Non-Fatal Error Log Registers: QPIPFFERRST QPIPFNERRST GFERRST GFFERRST GFFERRTIME GFNERRST No header logged for this error
DA	Intel QuickPath Interconnect Protocol Layer Queue/Table Overflow or Underflow	2	No Response – This error is not associated with a cycle. IOH detects and logs the error.	FERR/NERR is logged in Intel QuickPath Interconnect and Global Fatal Error Log Registers: QPIPFFERRST QPIPFNERRST GFERRST GFFERRST GFFERRTIME GFNERRST No header logged for this error

Table 16-3.IOH Error Summary (Sheet 12 of 13)

ID	Error	Default Error Severity	Transaction Response	Default Error Logging[1]
DB	Intel QuickPath Interconnect Protocol Parity Error.	2	No Response – This error is not associated with a cycle. IOH detects and logs the error.	FERR/NERR is logged in Intel QuickPath Interconnect and Global Fatal Error Log Registers: QPIPFFERRST QPIPFNERRST GFERRST GFFERRST GFFERRTIME GFNERRST
DC	IOH SAD illegal or non-existent memory for outbound snoop	2	Drop Transaction, No Response. This will cause time-out in the requester for non-posted requests. (for example, completion time-out in Intel QuickPath Interconnect request agent, or PCIe request agent.)	FERR/NERR is logged in Intel QuickPath Interconnect and Global Fatal Error Log Registers: QPIPFFERRST QPIPFFERRHD QPIPFNERRST GFERRST GFFERRST GFFERRTIME GFNERRST Intel QuickPath Interconnect header is logged
DE	IOH Routing Table invalid or non-existent entry reference			
DF	Illegal inbound request (includes VCp/VC1 request when they are disabled)			
DG	Intel QuickPath Interconnect Link Layer detected unsupported/ undefined packet (e.g., RSVD_CHK, message class, opcode, vn, viral)	2	No Response -- This error is not associated with a cycle. IOH detects and logs the error.	FERR/NERR is logged in Intel QuickPath Interconnect and Global Fatal Error Log Registers: QPIFFERRST QPIFNERRST GFERRST GFFERRST GFFERRTIME GFNERRST No header logged for this error
DH	Intel QuickPath Interconnect Protocol Layer Detected unsupported/ undefined packet Error (message class, opcode and vn only)	2	No Response -- This error is not associated with a cycle. IOH detects and logs the error.	FERR/NERR is logged in Intel QuickPath Interconnect Protocol and Global Fatal Error Log Registers: QPIPFFERRST QPIPFNERRST GFERRST GFFERRST GFFERRTIME GFNERRST

Table 16-3.IOH Error Summary (Sheet 13 of 13)

ID	Error	Default Error Severity	Transaction Response	Default Error Logging[1]
Thermal Error				
F0	Thermal Alert	1	No Response -- This error is not associated with a cycle. IOH detects and logs the error.	
F1	TSMAX Updated	0		FERR/NERR is logged in Thermal and Global Non-Fatal Error Log Registers: CTSTS.PKTRK
F2	Catastrophic Thermal Event	2		FERR/NERR is logged in Thermal and Global Fatal Error Log Registers: CTSTS.THRMTRIP

Notes:

1. This column notes the logging registers used assuming the error severity default remains. The error's severity dictates the actual logging registers used upon detecting an error.
2. It is possible that when a UR response is returned to the original requester, the error is logged in the AER of the root port connected to the requester.
3. It is possible that when a CA response is returned to the original requester, the error is logged in the AER of the root port connected to the requester.
4. Note that in some cases, IOH might not be able to log the error/header in AER when it signals CA back to the PCIe device.
5. Not all cases of this error are detected by IOH.

16.8 IOH PCIe Hot Add/Remove Support

Hot add/remove is the ability to add or remove a component without requiring the system to reboot. There are two types of hot add/remove:

- **Physical Hot add/remove**
  This is the conventional hot-plug of a physical component in the system. For example, an operator may decide to add a CPU to a running system. He/she may issue a hot-plug request to the system through the console interface. The console informs the operator of the appropriate steps of inserting the CPU. Once the CPU is inserted, the system incorporates the new CPU into the system.
- **Logical Hot add/remove**
  Logical hot add/remove differs from physical hot add/remove by not requiring physical removal or addition of a component. A component can be taken out of the system without the physical removal. Similarly, a disabled component can be hot added to the system. Logical hot add/remove enables dynamic partitioning, and allows resources to move in and out of a partition.

The IOH supports both physical and logical hot add/remove of various components in the system. These include:

- **CPU**
  Intel® 7500 chipset based platforms support CPU socket hot add/remove including the memory behind the CPU. CPU hot add/remove allows physical hot-plug/removal of a CPU, and enables dynamic partitioning of CPU components. Support of hot add/removal of CPU is expected to be restricted in some topologies due to hardware and software constraints. These constraints are explained in Section 16.8.1.
- **Memory**
  Intel 7500 chipset based platforms support memory hot add/remove with memory mirroring. Hot add/remove of memory allows physical hot-plug/removal of a memory component. Memory is a subcomponent of the CPU, hence hot add and remove of memory is expected to be coordinated by the CPUs or BMC, and does not involve IOHs.

- **IOH**
  Intel 7500 chipset based platforms support IOH hot add/remove. This feature allows physical hot-plug/removal of a IOH, and enables dynamic partitioning of IOH components. Support of hot add/removal of IOH is expected to be restricted in some topologies due to the hardware and software constraints. These constraints are explained in Section 16.8.1.

Note: Hot-plug events where the dual IOH configuration must be changed require a reset.

Note: The IOH does not support hot add/remove of the Legacy IOH and Legacy Bridge. The legacy IOH and its associated legacy bridge must be active at all times to provide legacy functions to the partition. The legacy IOH and its legacy bridge cannot be hot added/removed without shutting down the entire partition.

- **PCI Express and IO devices**
  Intel 7500 chipset based platforms support PCIe and IO device hot add/remove. This feature allows physical hot-plug/removal of an PCIe device connected to the IOH, and enables dynamic partitioning of the PCIe ports in IOH. In addition, physical hot-plug/remove for other IO devices downstream to IOH may be supported by downstream bridges. Hot-plug of PCIe and IO devices are well defined in PCIe/PCI specifications.

16.8.1 Hot Add/Remove Rules

1. Legacy IOH cannot be hot added/removed without shutting down the system.
2. Legacy bridge (ICH) itself cannot be hot added/removed from the IOH (no ESI hot-plug support).
3. Hot add/remove of the IOH is done through Intel QuickPath Interconnect hot add/remove (see Section 16.10.1.)
4. Hot add/remove of a field replaceable unit (FRU) is done through Intel QuickPath Interconnect hot add/remove (see Section 16.10.)
5. IOH is accessed via Intel QuickPath Interconnect link. Hot removing CPU or IOH must not cut off all Intel QuickPath Interconnect paths of any active IOH unless all devices below the orphaned IOH are first disabled (hot-removed).
6. IOH does not provide Intel QuickPath Interconnect route-through. Hot removing CPUs must not cut off all CPU-CPU Intel QuickPath Interconnect paths to an active CPU.

16.8.2 PCI Express Hot-Plug

PCI Express hot-plug is supported through the standard PCI Express native hot-plug mechanism. The IOH supports the sideband hot-plug signals; it does not support inband hot-plug messages. The IOH contains a Virtual Pin Port (VPP) that serially shifts the sideband PCI Express hot-plug signals in and out. External platform logic is required to convert the IOH serial stream to parallel. The virtual pin port is implemented via a dedicated SMBus port. The PCI Express hot-plug model implies a hot-plug controller per port, which is identified to software as a PCI Express capability of the peer-to-peer Bridge configuration space. Refer to the *PCI Express Base Specification,* Revision 2.0 for further details.

Summary of IOH PCI Express hot-plug support:

- Support for up to nine hot-plug slots, selectable by BIOS.
- Support for serial mode hot-plug only, using smbus devices such as PCA9555.

- Single SMBus is used to control hot-plug slots.
- Support for CEM/SIOM/Cable form factors.
- Support MSI or ACPI paths for hot-plug interrupts.
- Hot-plug is not supported on a non-legacy IOH ESI port or when the ESI port is used as a PCIe port.
- The IOH does not support inband hot-plug messages on PCIe:
  - The IOH does not issue these and the IOH discards them silently if received.
- A hot-plug event cannot change the number of ports of the PCIe interface (that is, bifurcation).

16.8.2.1 PCI Express Hot-Plug Interface

Table 16-4 describes the hot-plug signals supplied by the IOH for each PCI Express port. These signals are controlled and reflected in the PCI Express root port hot-plug registers.

Table 16-4. Hot-Plug Interface (Sheet 1 of 2)

Signal Name	Description	Action
ATNLED	This indicator is connected to the Attention LED on the baseboard. For a precise definition refer to *PCI Express Base Specification, Revision 1.0a and the associated set of Erratas and EC*'s*.	Indicator can be off, on, or blinking. The required state for the indicator is specified with the Attention Indicator Register. The IOH blinks this LED at 1Hz.
PWRLED	This indicator is connected to the Power LED on the baseboard. For a precise definition refer to *PCI Express Base Specification, Revision 1.0a and the associated set of Erratas and EC*'s*.	Indicator can be off, on, or blinking. The required state for the indicator is specified with the Power Indicator Register. The IOH blinks this LED at 1 Hz.
BUTTON#	Input signal per slot which indicates that the user wishes to hot remove or hot add a PCI Express card/module.	If the button is pressed (BUTTON# is asserted), the Attention Button Pressed Event bit is set and either an interrupt or a general-purpose event message Assert/ Deassert_HPGPE to the ICH is sent.[1]
PRSNT#	Input signal that indicates if a hot-pluggable PCI Express card/module is currently plugged into the slot.	When a change is detected in this signal, the Presence Detect Event Status register is set and either an interrupt or a general-purpose event message Assert/Deassert_HPGPE is sent to the ICH.[1]
PWRFLT#	Input signal from the power controller to indicate that a power fault has occurred.	When this signal is asserted, the Power Fault Event Register is set and either an interrupt or a general-purpose event message Assert/ Deassert_HPGPE message is sent to the ICH.[1]
PWREN	Output signal allowing software to enable or disable power to a PCI Express slot.	If the Power Controller Register is set, the IOH asserts this signal.
MRL#/EMILS	Manual retention latch status or Electro-mechanical latch status input indicates that the retention latch is closed or open. Manual retention latch is used on the platform to mechanically hold the card in place and can be open/closed manually. Electromechanical latch is used to electromechanically hold the card in place and is operated by software. MRL# is used for card-edge and EMLSTS# is used for SIOM formfactors.	Supported for the serial interface and MRL change detection results in either an interrupt or a general-purpose event message Assert/ Deassert_HPGPE message is sent to the ICH.[1]

Table 16-4. Hot-Plug Interface (Sheet 2 of 2)

Signal Name	Description	Action
EMIL	Electromechanical retention latch control output that opens or closes the retention latch on the board for this slot. A retention latch is used on the platform to mechanically hold the card in place. Refer to *PCI Express Server/Workstation Module Electromechanical Spec Rev 0.5a* for details of the timing requirements of this pin output.	Supported for the serial interface and is used only for the SIOM form-factor.

Notes:

1. For legacy operating systems, the described Assert_HPGPE/Deassert_HPGPE mechanism is used to interrupt the platform for PCI Express hot-plug events. For newer operating systems, this mechanism is disabled and the MSI capability is used by the IOH instead.

16.8.2.2 PCI Express Hot-Plug Interrupts

The IOH generates an Assert/Deasset_HPGPE message to the ICH over the ESI link or an MSI when a hot-plug event occurs on any of its standard PCI Express interfaces. Refer to Figure 16-12 for the hot-plug interrupt flow priority. The GPE messages are selected when bit 3 in the Miscellaneous Control and Status Register (MISCCTRLSTS) is set. Refer to Section 21.12.3.13. If this bit is clear, the MSI method is selected (note that the MSI Enable bit in the (MSIX)MSGCTRL register does not control selection of GPE versus MSI method). Refer to the *PCI Express Base Specification,* Revision 2.0 for details of MSI generation on a PCI Express Hot-Plug event. This section covers how the GPE event is generated for PCI Express hot-plug events.

PCI Express hot-plug events are defined as a set of actions: Command completed, Presence Detect changed, MRL sensor changed, power fault detected, Attention button pressed and data Link layer state changed events. Each of these hot-plug events have a corresponding bit in the PCI Express Slot status and control registers. The IOH processes hot-plug events using the wired-OR (collapsed) mechanism to emulate the level sensitive requirement for the legacy interrupts on ESI. When the wired-OR output is set, the Assert_HPGPE is sent to the ICH. When software clears all the associated register bits (that are enabled to cause an event) across the ports, the IOH will generate a Deassert_HPGPE message to the ICH. Refer to Chapter 8, “Interrupts,” for details of how these messages are routed to the ICH. Note that Assert/Deassert_HPGPE messages could be received from downstream of a PCIe port (when that port connects to a downstream IOH) and these messages are collapsed with internally generated PMEGPE virtual wires as well.

Figure 16-12.PCI Express Hot-Plug Interrupt Flow

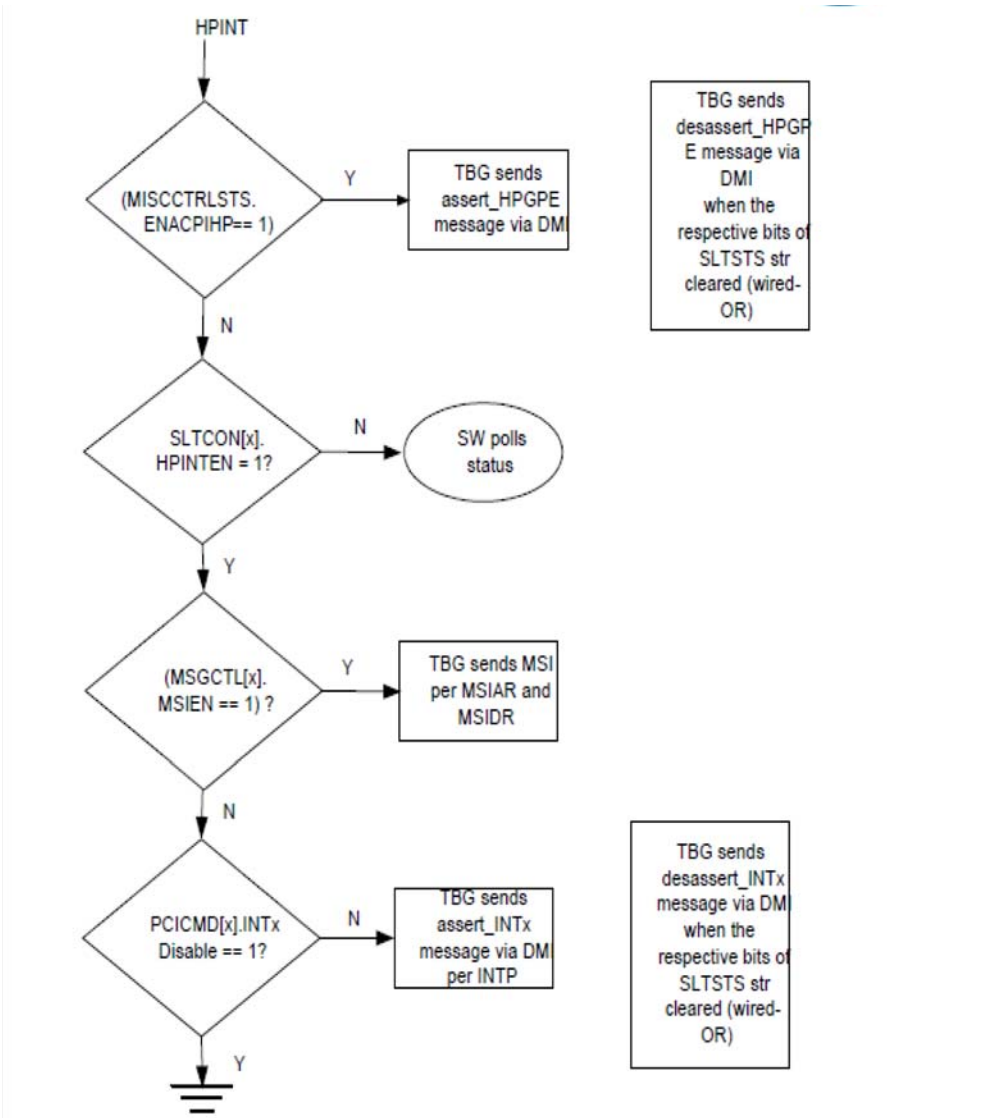

ENACPIHP	HPINTEN	MSIEN	INTx Disable	Output
1	x	x	x	Assert_HPGPE
0	1	1	x	MSI
0	1	0	0	Assert_INTx
0	1	0	1	--
0	0	x	x	--

16.9 Virtual Pin Ports (VPP)

The IOH contains a VPP that serially shifts the sideband PCI Express Hot-Plug signals in and out. VPP is a dedicated 100 KHz SMBus interface that connects to a number of serial to parallel I/O devices, such as the PCA9555. The PCA9555 supports 16 GPIOs structured as two 8-bit ports, with each GPIO configurable as an input or an output. Reading or writing to the PCA9555 component with a specific command value reads or writes the GPIOs or configures the GPIOs to be either input or output. The IOH supports up to nine PCIe Hot-Plug ports through the VPP interface with maximum of 5 PCA9555, or similar devices, populated.

The IOH VPP supports SMBus devices with command sequence as shown Table 16-5. Each PCI Express port is associated with one of the 8-bit ports of the serial-to-parallel I/O device. The mapping is defined by a Virtual Pin Port register field in the VPP control register (VPPCTRL) for each PCIe slot. The VPP register holds the SMBus address and Port (0 or 1) of the I/O Port associated with the PCI Express port. A[1:0] pins on each I/O Extender (that is, PCA9555, and so on) connected to the IOH must be strapped uniquely.

Table 16-5. I/O Port Registers in On-Board SMBus Devices Supported by IOH

Command	Register	IOH Usage
0	Input Port 0	Continuously Reads Input Values
1	Input Port 1	
2	Output Port 0	Continuously Writes Output Values
3	Output Port 1	
4	Polarity Inversion Port 0	Never written by IOH
5	Polarity Inversion Port 1	
6	Configuration Port 0	Direction (Input/Output)
7	Configuration Port 1	

16.10 Operation

When the IOH comes out of Powergood reset, the I/O ports are inactive. The IOH is not aware of how many I/O extenders are connected to the VPP, what their addresses are, nor what PCI Express ports are hot-pluggable. The IOH does not master any commands on the SMBus until a VPP enable bit is set.

For PCI Express 1.0a slots, an additional form factor (FF) bit the VPP control register (VPPCTRL) is used to differentiate card, module or cable hot-plug support. When BIOS sets the Hot-Plug Capable bit in the root port PCI Express capability register for the first time, the IOH initializes the associated VPP corresponding to that root port with direction and logic level configuration. From then on, the IOH continually scans in the inputs and scans out the outputs corresponding to that port. VPP registers for PCI Express 1.0a ports which do not have the VPP enable bit set are invalid and ignored.

Table 16-6 defines how the eight hot-plug signals are mapped to pins on the I/O extender's GPIO pins. When the IOH is not doing a direction or logic level write (which would happen when a PCI Express port is first setup for hot-plug), it performs input register reads and output register writes to all valid VPPs. This sequence repeats indefinitely until a new VPP enable bit is set. To minimize the completion time of this sequence, both ports in the external device are written or read in any sequence. If only

one port of the external device has yet been associated with a hot-plug capable root port, the value read from the other port of the external device are discarded and only de-asserted values are shifted out for the outputs. See Table 16-6 for the details.

Table 16-6. Hot-Plug Signals on the Virtual Pin Port

Bit	Direction	Voltage Logic Table	Signal	Logic True Meaning	Logic False Meaning
Bit 0	Output	High_True	ATNLED	ATTN LED is to be turned ON	ATTN LED is to be turned OFF
Bit 1	Output	High_True	PWRLED	PWR LED is to be turned ON	PWR LED is to be turned OFF
Bit 2	Output	High_True	PWREN	Power is to be enabled on the slot	Power is NOT to be enabled on the slot
Bit 3	Input	Low_True	BUTTON#	ATTN Button is pressed	ATTN Button is NOT pressed
Bit 4	Input	Low_True	PRSNT#	Card Present in slot	Card NOT Present in slot
Bit 5	Input	Low_True	PWRFLT#	PWR Fault in the VRM	NO PWR Fault in the VRM
Bit 6	Input	Low_True/ High_True	MRL#/EMILS	MRL is closed/ EMILS is disengaged	MRL is open/EMILS is engaged
Bit 7	Output	High_True	EMIL	Toggle interlock state -Pulse output 100 ms when '1' is written	No effect

Table 16-7 describes the sequence generated for a write to an I/O port. Both 8-bit ports are always written. If a VPP is valid for the 8-bit port, the output values are updated as per the PCI Express Slot Control register for the associated PCI Express slot.

Table 16-7. Write Command

Bits	IOH Drives	I/O Port Drives	Comment
1	Start		SDL falling followed by SCL falling
7	Address[6:0]		[6:3] = 0100 [2:0] = <Per the VPP Control Register (VPPCTL)>
1	0		indicates write.
1		ACK	If NACK is received, IOH completes with stop and sets status bit in the VPP Status Register (VPPSTS).
8	Command Code		Register Address see Table 16-5 [7:3]=00000,[2:1] = 01 for Output, 11 for Direction [0] = 0
1		ACK	If NACK is received, IOH completes with stop and sets in the VPP Status Register (VPPSTS).
8	Data		One bit for each I/O as per Table 16-6.
1		ACK	If NACK is received, IOH completes with stop and sets in the VPP Status Register (VPPSTS).
8	Data		One bit for each I/O as per Table 16-6
1		ACK	If NACK is received, IOH completes with stop and sets in the VPP Status Register (VPPSTS).
1	Stop		

The IOH issues Read Commands to update the PCIe Slot Status register from the I/O port. The I/O port requires that a command be sent to sample the inputs, then another command is issued to return the data. The IOH always reads inputs from both 8-bit ports. If the VPP is valid, the IOH updates the associated PEXSLOTSTS (for PCIe) register according to the values of MRL#/EMLSTS#, BUTTON#, PWRFLT# and PRSNT# read from the value register in the I/O port. Results from invalid VPPs are discarded. Table 16-8 defines the read command format.

Table 16-8. Read Command

Bits	IOH Drives	I/O Port Drives	Comment
1	Start		SDL falling followed by SCL falling.
7	Address[6:0]		[6:2] = 01000 [1:0] = <per the VPP Control Register (VPPCTL)>
1	0		indicates write.
1		ACK	If NACK is received, IOH completes with stop and sets in the VPP Status Register (VPPSTS).
8	Command Code		Register Address [2:0] = 000
1		ACK	If NACK is received, IOH completes with stop and sets in the VPP Status Register (VPPSTS).
1	Start		SDL falling followed by SCL falling.
7	Address[6:0]		[6:2] = 01000 [1:0] = per the VPP Control Register (VPPCTL)>
1	1		indicates read.
8		Data	One bit for each I/O as per Table 16-6. The IOH always reads from both ports. Results for invalid VPPs are discarded.
1	ACK		
8		Data	One bit for each I/O as per Table 16-6. The IOH always reads from both ports. Results for invalid VPPs are discarded.
1	NACK		
1	Stop		

16.10.1 Intel QuickPath Interconnect Hot-Plug

Refer to Figure 16-13. In the IOH, Intel QPI hot-plug is performed by the BMC. IOH provides a minimal set of hardware to assist Intel QPI hot-plug operation. In this model, BMC monitors and controls all hot-plug signals for Intel QPI agents (CPU and IOH). BMC is required to generate interrupts to request CPU for hot-plug event services. Interrupt to CPU is delivered through the assertion of GPIO pins provided by the ICH. The supported interrupts include PMI/SMI and SCI.

Figure 16-13. Intel QPI Hot Add/Remove Support

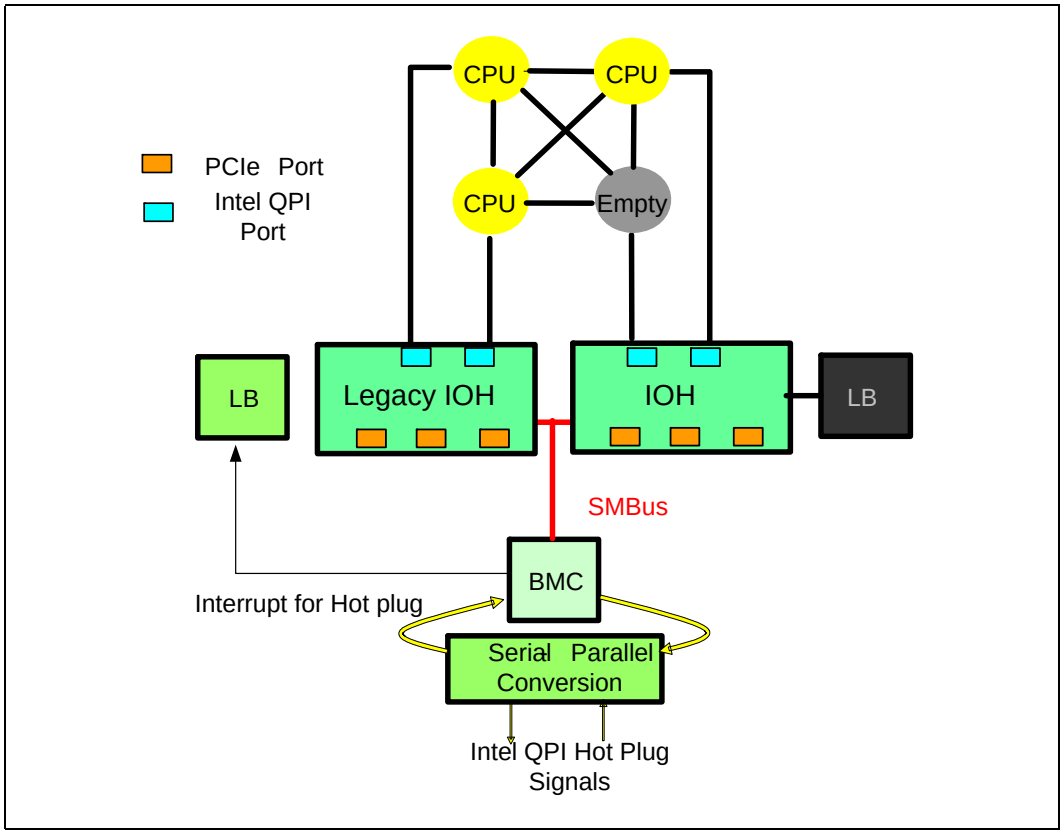

16.10.1.1 IOH Hardware Support for Intel QPI Hot-Plug

IOH core provides the following features for Intel QPI hot add/remove support.

1. Intel QPI participant list
   IOH provides a participant list (QPIPSB, QPIPNCB, QPIPLKBL, QPIPQBL registers). This is realized through a 32-bit vector, with each bit representing a NodeID. This means IOH supports only local broadcast where the maximum number of the node IDs is 32. The participation list will be modified by firmware for hot add/remove of IOH or CPU.

2. System Quiescence support
   Refer to Section 4.7, IOH provides a mechanism to quiesce the system through combination of inband message cycle and CSR bits. Writing to IOH quiescence CSR bit (QPIPQC) triggers the IOH to issue SpcStopReq messages to all nodes in the partition of the hot add/remove operation. Quiescence is required because the participation lists, source decoders, and routing tables of CPUs and IOHs need to change to reflect the new configuration. While the tables are being changed, the system must not allow traffic to reference these tables. Once the StartReq phase begins, the new information is used for routing stalled and subsequent traffic.

3. IOH write cache flushing and queue draining
   Hot add/remove requires flushing of the write cache and draining of queues. IOH provides CSR bits (QPIPWRF) for firmware to initiate cache flushing and queue draining operation. Upon setting of the CSR bit, IOH initiates the associated operation. The completion of the operation clears the corresponding CSR bit. See Section 4.8 for the details of write cache operations.

4. Intel QPI Link Layer Control/Status Registers

   IOH defines a set of CSRs associated with Intel QPI link layer (QPI*LS). These CSRs are located in the QPICFG space. The CSRs provide control/status of the link and interrupt generation due to a link change state. The interrupt is programmable to SMI, PMI, SCI, or disabled. Intel QPI physical layer registers (QPI*PHIS) are in DFx space.

5. Intel QPI Link Stall Before Physical Initialization

   IOH provides a BMCINIT strap pin that causes the IOH to stall before Intel QPI physical layer initialization. This stall allows the BMC to initialize the IOH (for example, Intel QPI Node ID, Agent Type, Routing Table,..., and so forth) prior to the Intel QPI link parameter exchange phase. Once IOH is setup properly, BMC writes a 1 to the PhyInitBegin bit in the QPI[1:0]PH_CTR register to start Intel QPI physical layer training and proceed to the Link layer initialization phase. In a system without a BMC, IOH can also be configured to complete the Intel QPI PHY and Link initialization rather than being stalled. In this case, the values for the Intel QPI parameters are derived from the straps and default CSR values. The method of holding the CPU in reset to stall the Intel QPI links can be used instead of using the BMCINIT strap.

6. Scratch Pad and Semaphore Registers

   IOH contains 16 scratch pad and semaphore registers in the unprivileged space (SR, CWR, IR, TSR TOR). 16 scratch pad and semaphore register in the privilege space (PSR, PCWR, PIR, PTSR, PTOR). These registers provide means of communication between the CPUs and BMC. Hot add/remove operations are coordinated between the CPUs, and between CPUs and BMC using these registers.

16.10.2 IOH Hot-plug

IOH component can be hot added/removed through the support of the Intel QPI or PCIe hot-plug features. By design, add/remove of an IOH causes either Intel QPI hot-plug event, or PCIe hot-plug event, but never both. Refer to the Intel QPI hot-plug described in this chapter and PCIe hot-plug described in the PCIe specification for more details.

Note: Above prescribes the limitations of IOH hot-plug including the requirement that the legacy IOH cannot be removed from the system. For any non-legacy IOHs which connect to an additional ICH, there is the further requirement that the IOH and ICH are both on the same FRU and are powered off together. ESI hot-plug is not supported.

16.10.3 SMBus and Memory Hot-plug

Both IOH and CPU have SMBus interfaces. When IOH or CPU is hot added/removed, it creates an SMBus hot-plug event in addition to PCIe or Intel QPI hot-plug. The support of SMBus hot-plug is done entirely out-of-band by the BMC. IOH provides no special hardware to support SMBus hot-plug.

CPU provides memory hot-plug feature. IOH provides no special hardware to support for memory hot-plug.

§

17 Intel® Trusted Execution Technology

17.1 Introduction

Intel's technology for safer computing, Intel® Trusted Execution Technology (Intel® TXT), defines platform-level enhancements that provide the building blocks for creating trusted platforms.

Whenever the word trust is used, there must be a definition of who is doing the trusting and what is being trusted. This enhanced platform helps to provide the authenticity of the controlling environment such that those wishing to rely on the platform can make an appropriate trust decision. The enhanced platform determines the identity of the controlling environment by accurately measuring the controlling software.

Another aspect of the trust decision is the ability of the platform to resist attempts to change the controlling environment. The enhanced platform will resist attempts by software processes to change the controlling environment or bypass the bounds set by the controlling environment.

Intel TXT is a set of extensions designed to provide a measured and controlled launch of system software that will then establish a protected environment for itself and any additional software that it may execute.

These extensions enhance two areas:

- The launching of the Measured Launched Environment (MLE).
- The protection of the MLE from potential corruption.

The enhanced platform provides these launch and control interfaces using Safer Mode Extensions (SMX). The SMX interface includes the following functions:

- Measured/Verified launch of the MLE.
- Mechanisms to ensure the above measurement is protected and stored in a secure location.
- Protection mechanisms that allow the MLE to control attempts to modify itself.

For more information refer to the *Intel® TXT BIOS Writer's Guide* and *Intel® TXT Measured Launched Environment Developer's Guide*. Also refer to http://download.intel.com/technology/security/downloads/315168.pdf for the configuration register settings and recommendations needed to support this feature.

§

18 Intel® Virtualization Technology

18.1 Introduction

Intel® Virtualization Technology (Intel® VT) is the technology that makes a single system appear as multiple independent systems to software. This allows for multiple independent operating systems to be running simultaneously on a single system. The first revision of this technology, Intel Virtualization Technology (Intel VT) for IA-32 Intel® Architecture (Intel VT-x) added hardware support in the processor to improve the virtualization performance and robustness. The second revision of this specification, Intel Virtualization Technology (Intel VT) for Directed I/O (Intel VT-d) adds chipset hardware implementation to improve I/O performance and robustness.

18.2 Intel VT-d

Features Supported

- Support for root entry, context entry and default context
- 48 bit max guest address width and 41/46/51 bit max host address width for non-isoch traffic, in MP profiles
- Support for 4K page sizes only
- Support for register based fault recording only and support for MSI interrupts for faults
  - — Support for fault collapsing based on Requester ID, OS-visible Intel ME PCI devices and CB3 DMA
- Support for both leaf and non-leaf caching
- Support for boot protection of default page table
- Support for non-caching of invalid page table entries
- Support for Intel VT-d read prefetching/snarfing, that is, translations within a cacheline are stored in an internal buffer for reuse for subsequent transactions.

18.3 Intel VT-d2 Features

- Support for PCISIG endpoint caching (ATS)
- Support for interrupt remapping
- Support for queue-based invalidation interface
- Support for Intel VT-d read prefetching/snarfing e.e. translations within a cacheline are stored in an internal buffer for reuse for subsequent transactions
- Intel VT-d Features Not Supported
- No support for advance fault reporting
- No support for super pages
- No support for 1 or 2 level page walks for 1, 2, or 3 level walks for non-isoch remap engine

- No support for Intel VT-d translation bypass address range (such usage models need to be resolved with VMM help in setting up the page tables correctly)
- Support for queue-based invalidation interface

18.4 Other Virtualization Features Supported

- Support for FLR for CB DMA per PCIE ECR
- Support for V, B, C, R and U bits in ACS ECN
  - IOH performs error checking for the V and B bits. C, R and U bits have no impact on IOH, that is, they are simply capability bits that IOH advertises and nothing more
- ARI ECN compliant to support IOV devices

§

19 Signal List

This chapter lists all the logical signals which interface to the IOH. This chapter should not be explicitly used to calculate the pin count for the IOH.

19.1 Conventions

The terms *assertion* and *deassertion* are used extensively when describing signals, to avoid confusion when working with a mix of active-high and active-low signals. The term *assert*, or *assertion*, indicates that the signal is active, independent of whether the active level is represented by a high or low voltage. The term *deassert*, or *deassertion*, indicates that the signal is inactive.

Signal names may or may not have a "_N" appended to them. The "_N" symbol at the end of a signal name indicates that the active, or asserted state occurs when the signal is at a low voltage level. When "_N" is not present after the signal name the signal is asserted when at the high voltage level.

When discussing data values used inside the component, the logical value is used; that is, a data value described as "1101b" would appear as "1101b" on an active-high bus, and as "0010b" on an active-low bus. When discussing the assertion of a value on the actual pin, the physical value is used; that is, asserting an active-low signal produces a "0" value on the pin.

Table 19-1 and Table 19-2 list the reference terminology used later for buffer technology types (for example, HCSL, and so on) used and buffering signal types (for example, input, output, and so on) used.

Table 19-1. Buffer Technology Types

Buffer Type	Description
Intel QuickPath Interconnect	Current-mode 6.4 GT/s forwarded-clock Intel QuickPath Interconnect signaling
PCIEX2	Current-mode 5 GHz PCI Express 2nd-generation signaling
PCIEX	Current-mode 2.5 GHz PCI Express 1st-generation signaling
HCSL	Current-mode differential reference clock input
GPIO (SMBus)	3.3 V 100 KHz SMBus Open Drain output with Schmidt trigger input
CMOS	1.1 V 200 MHz CMOS totem-pole output with Schmidt trigger input
GPIO (JTAG)	1.1 V 20 MHz CMOS open-drain output with Schmidt trigger input
Analog	Typically a voltage reference or specialty power supply
DDR	1.8 V VDDR2 reference

Table 19-2. Buffer Signal Directions

Buffer Direction	Description
I	Input pin
O	Output pin
I/O	Bidirectional (input/output) pin

Some signals or groups of signals have multiple versions. These signal groups may represent distinct but similar ports or interfaces, or may represent identical copies of the signal used to reduce loading effects. Table 19-3 shows the conventions the IOH uses.

Table 19-3. Signal Naming Conventions

Convention	Definition
SIG{0/1/2}XX	Expands to: SIG0XX, SIG1XX, and SIG2XX
SIG[2:0]	Denotes a bus and expands to: SIG[2], SIG[1], and SIG[0].
SIG(0/1/2)	Denotes multiple electrical copies of the same output signal and expands to: SIG2, SIG1, and SIG0.
SIG_N or SIG[2:0]_N	Denotes an active low signal or bus.

19.2 Signal List

In the following tables Signal Group column is used for signals with specific DC characteristics.

Table 19-4. JTAG Signals

Signal Name	Type	Direction	Signal Group	Description
TCK	GPIO(JTAG)	I	(u)	**JTAG Test Clock:** Clock input used to drive Test Access Port (TAP) state machine during test and debugging. Internal pullup
TDI	GPIO(JTAG)	I	(u)	**JTAG Test Data In:** Data input for test mode. Used to serially shift data and instructions into TAP. Internal pullup
TDO	GPIO(JTAG)	O	(u)	**JTAG Test Data Out:** Data: Data output for test mode. Used to serially shift data out of the device. Internal pullup. This pin is not tristated when POWERGOOD is not asserted. Therefore, if tristateing this signal at the platform level is required, use either a discrete component or a PLD device.
TMS	GPIO(JTAG)	I	(u)	**Test Mode Select:** This signal is used to control the state of the TAP controller.
TRST_N	GPIO(JTAG)	I	(u)	**Test Reset:** This signal resets the TAP controller logic.
SMBSCL	GPIO (SMBus)	I/O	(t)	**SMBus Clock:** Provides synchronous operation for the SMBus.
SMBSDA	GPIO (SMBus)	I/O	(t)	**SMBus Addr/Data:** Provides data transfer and arbitration for the SMBus.

Table 19-5. Intel QuickPath Interconnect Signals

Signal Name	Type	Direction	Signal Group	Description
QPI{0}R{P/N}DAT[19:0]	Intel QuickPath Inter-connect	I	(a)	Intel QuickPath Interconnect Data Input (Outbound)
QPI{0}R{P/N}CLK	Intel QuickPath Inter-connect	I	(d)	Intel QuickPath Interconnect Received Clock (Outbound)
QPI{0}T{P/N}DAT[19:0]	Intel QuickPath Inter-connect	O	(a)	Intel QuickPath Interconnect Data Output (Inbound)
QPI{0}T{P/N}CLK	Intel QuickPath Interconnect	O	(d)	Intel QuickPath Interconnect Forwarded Clock (Inbound)
QPI{0}{R/I}COMP	Analog	I/O	(c)	Intel QuickPath Interconnect Compensation: Used for the external impedance matching resistors.
QPI{0/1}RXBG[1:0]	Analog	I/O		Intel QuickPath Interconnect external reference voltage signal. This is back-up mode in case of RX band-gap circuit failure
QPI{0/1}TXBG[1:0]	Analog	I/O		Intel QuickPath Interconnect external reference voltage signal. This is back-up mode in case of TX band-gap circuit failure
QPI{0}REFCLK{P/N}	HCSL	I	(d)	Intel QuickPath Interconnect Reference Clock: Differential reference clock pair input.
QPIFREQSEL{1/0}	CMOS	I	(e)	Intel QuickPath Interconnect frequency selection: Used for determining the normal Intel QuickPath Interconnect operating frequency.
QPI{0/1}VRMVREFRX0	CMOS	I		Intel QuickPath Interconnect RX external VRM vref. IOH does not need this pin to be driven when QPI{0/1}VRMVREF is being internally generated. Leave pin as No Connect.
QPI{0/1}VRMVREFRX1	CMOS	I		Intel QuickPath Interconnect RX from external VRM vref. IOH does not need this pin to be driven when QPI{0/1}VRMVREF is being internally generated. Leave pin as No Connect.
QPI{0/1}VRMVREFRX2	CMOS	I		Intel QuickPath Interconnect RX from external VRM vref. IOH does not need this pin to be driven when QPI{0/1}VRMVREF is being internally generated.
QPI{0/1}VRMVREFRX3	CMOS	I		Intel QuickPath Interconnect RX from external VRM vref. IOH does not need this pin to be driven when QPI{0/1}VRMVREF is being internally generated.
QPI{0/1}VRMVREFTX	CMOS	I		Intel QuickPath Interconnect TX from external VRM vref. IOH does not need this pin to be driven when QPI{0/1}VRMVREF is being internally generated.

Table 19-6. PCI Express Signals (Sheet 1 of 2)

Signal Name	Type	Direction	Signal Group	Description
PE1T{P/N}[1:0]	PCIEX2	O	(g)	PCI Express outbound data port1
PE1R{P/N}[1:0]	PCIEX2	I	(f)	PCI Express inbound data port1
PE2T{P/N}[1:0]	PCIEX2	O	(g)	PCI Express outbound data port2
PE2R{P/N}[1:0]	PCIEX2	I	(f)	PCI Express inbound data port2

Table 19-6. PCI Express Signals (Sheet 2 of 2)

Signal Name	Type	Direction	Signal Group	Description
PE3T{P/N}[3:0]	PCIEX2	O	(g)	PCI Express outbound data por3
PE3R{P/N}[3:0]	PCIEX2	I	(f)	PCI Express inbound data port3
PE4T{P/N}[3:0]	PCIEX2	O	(g)	PCI Express outbound data port4
PE4R{P/N}[3:0]	PCIEX2	I	(f)	PCI Express inbound data port4
PE5T{P/N}[3:0]	PCIEX2	O	(g)	PCI Express outbound data port5
PE5R{P/N}[3:0]	PCIEX2	I	(f)	PCI Express inbound data port5
PE6T{P/N}[3:0]	PCIEX2	O	(g)	PCI Express outbound data port6
PE6R{P/N}[3:0]	PCIEX2	I	(f)	PCI Express inbound data port6
PE7T{P/N}[3:0]	PCIEX2	O	(g)	PCI Express outbound data port7
PE7R{P/N}[3:0]	PCIEX2	I	(f)	PCI Express inbound data port7
PE8T{P/N}[3:0]	PCIEX2	O	(g)	PCI Express outbound data port8
PE8R{P/N}[3:0]	PCIEX2	I	(f)	PCI Express inbound data port8
PE9T{P/N}[3:0]	PCIEX2	O	(g)	PCI Express outbound data port9
PE9R{P/N}[3:0]	PCIEX2	I	(f)	PCI Express inbound data port9
PE10T{P/N}[3:0]	PCIEX2	O	(g)	PCI Express outbound data port10
PE10R{P/N}[3:0]	PCIEX2	I	(f)	PCI Express inbound data port10
PE{0/1}CLK{P/N}	HCSL	I	(j)	PCI Express Reference Clock: Differential reference clock pair input.
PE{0/1}JCLK{P/N}	HCSL	I		PCI Express PLL jitter injection clock. Recommend to leave these pins floating on external platforms.
PE{0/1}{RCOMPO/ ICOMPO/ICOMPI}	ANALOG	I/O	(h)	PCI Express Compensation: Used for the external impedance matching resistors.
PE{0/1}RBIAS	ANALOG	I/O	(h)	PCI Express clock: External resistance to generate 500uA absolute reference current bias.
PEHPSCL	GPIO (SMBus)	O		PCI Express Hot-Plug SMBus Clock: Provides PCI Express Hot-Plug via dedicated SMBus.
PEHPSDA	GPIO (SMBus)	I/O		PCI Express Hot-Plug SMBus Data: Provides PCI Express Hot-Plug via dedicated SMBus.

Table 19-7. Signals

Signal Name	Type	Direction	Signal Group	Description
R{P/N}[3:0]	PCIEX	I	(k)	Inbound Data
T{P/N}[3:0]	PCIEX	O	(l)	Outbound Data

Table 19-8. MISC Signals (Sheet 1 of 3)

Signal	Type	Direction	Signal Group	Description
XDPDQ[15:0]	DDR	I/O	(y)	XDP data bus
XDPCLK1XP	DDR	O	(y)	XDP clock. Clock 1x reference for XDP
XDPCLK1XN	DDR	O	(y)	XDP clock. Clock 1x reference for XDP complement
XDPRDYACK_N	DDR	O	(y)	XDP TO XDP Ready Acknowledge
XDPRDYREQ_N	DDR	I	(y)	XDP Ready Acknowledge

Table 19-8. MISC Signals (Sheet 2 of 3)

Signal	Type	Direction	Signal Group	Description
XDPDQS{P/N}[1:0]	DDR	I/O	(y)	XDP Strobe
VCCXDP18	Analog	PWR		XDP Power
VCCXDP	Analog	PWR		XDP on-die termination
A20M_N	GPIO1.1 (CMOS)	I	(r)	A20M: Legacy signal from ICH. Translated to Intel QuickPath Interconnect message to CPU: "MASK ADDRESS BIT 20"
BMCINIT	GPIO1.1 (CMOS)	I	(r)	BMC initialized: Intel QuickPath Interconnect ports stall indefinitely on power-up physical initialization until an external agent (BMC) releases them. Strap
CORERST_N	GPIO3.3 (CMOS)	I	(q)	Reset input: Reset input driven by the system.
COREPWRGOOD	GPIO3.3 (CMOS)	I	(q)	Core power good: Clears the IOH. This signal is held low until all power supplies and reference clocks are in specification. This signal is followed by CORERST_N de-assertion
AUXPWRGOOD	GPIO3.3 (CMOS)	I	(q)	Auxiliary power good: Clears the IOH. This signal is held low until all power supplies and reference clocks are in specification. This signal is followed by CORERST_N de-assertion.
ESILEGACY_N	CMOS	I		Legacy Port: Indicates that ESI is connected to the legacy ICH.
PLLPWRDET	GPIO3.3 (CMOS)	I	(q)	Auxiliary PLL power detect: Power and master clocks are stable so PLL's can commence lock. Asserted prior to AUXPWRGOOD.
COREPLLPWRDET	GPIO3.3 (CMOS)	I	(q)	Core PLL power detect: Power and master clocks are stable so PLL's can commence lock. Asserted prior to COREPWRGOOD.
DDRFREQ[3:2]	GPIO1.1 (CMOS)	I	(r)	DDRFREQ[3:2] as DDR frequency selection defined as: "00" = 133MHz input "01" = 100 MHz input "10" = RSVD "11" = RSVD
ERR_N[2:0]	Smbus	O	(s)	Error output signals. Minimum assertion time is 12 cycles.
EXTSYSTRIG	GPIO	I/O	(u)	External System Trigger. Primary input to the on-die debug trigger mechanism.
FERR_N	GPIO	O	(r)	FERR: Legacy signal to ICH. Translated into Intel QuickPath Interconnect message to CPU: "FLOATING POINT ERROR"
INIT_N	GPIO	I	(r)	INIT: Legacy signal from ICH. Translated into Intel QuickPath Interconnect message to CPU: "INTERRUPT TO RESET VECTOR"
INTR	GPIO	I	(r)	INTR: Legacy signal from ICH. Translated into Intel QuickPath Interconnect message to CPU: "INTERRUPT"
LEGACYIOH	GPIO1.1 (CMOS)	I/O	(r)	Used to determine legacy or non-legacy selection: '1': Legacy IOH '0': Non-legacy IOH
LTRESET_N	GPIO	O	(s)	LT reset is a mechanism that stops the platform due to a security violation. It is a trigger for a HARD reset.
NMI	GPIO1.1 (CMOS)	I	(r)	NMI: Legacy signal from ICH. Translated into Intel QuickPath Interconnect message to CPU: "NON-MASKABLE INTERRUPT"
MP/NODEID[3:2]	I CMOS	N/A		Straps: MP strap. Node ID[3:2] Indicates QPI NodeID bits [3:2]. Indicates SMBus ID bits [2:1]. SMBus ID[3] will always be 0.

Table 19-8. MISC Signals (Sheet 3 of 3)

Signal	Type	Direction	Signal Group	Description
PESBLCSEL	GPIO	I	(i)	PESBLCSEL: 0 = PCIE LC PLL (default); 1 = PCIE SB PLL (backup)
PEWIDTH[5:0]	GPIO1.1 (CMOS)	I/O	(i)	PCIe Link Width Select.
QPICKFAIL	I CMOS	N/A	(e)	Intel QPI Clock Failover Mode: Sets Intel QPI physical clock failover support. '0' - Disable Clock Failover '1' - Enable Clock Failover Needs to be disabled for compatibility with components that do not support the same clock failover bits on the Intel QPI interface.
QPIFREQSEL[1:0]	CMOS	I	(e)	Intel QuickPath Interconnect frequency selection: Used for determining the normal Intel QuickPath Interconnect operating frequency. "QPIFREQSEL1 & QPIFREQSEL0" decoded as follows: "00" = 4.8 GT/s "01" = 5.867 GT/s (Intel Xeon processor 7500 series based only) "10" = 6.4 GT/s "11" = RSVD
QPISBLCSEL	CMOS	I	(e)	QPISBLCSEL: 0 = QPI LC PLL (default); 1 = QPI SB PLL (backup)
RESETO_N	JTAG/GPIO1.1 (OD)	O	(u)	RESETO_N: Reset signal to the CPU synchronized to QPICLK
SMBUSID	GPIO	I	(r)	SMBus ID: Indicates SMBus ID bits [7:4]. '1' indicates an upper-address ID of 1110 (0xE). '0' indicates an upper-address ID of 1100 (0xC). Strap
SMI_N	GPIO1.1 (CMOS)	I	(r)	SMI: Legacy signal from ICH. Translated into Intel QuickPath Interconnect message to CPU: "SYSTEM MANAGEMENT INTERRUPT"
TEST[4:0]	Analog	I/O		See the *Intel® Xeon® Processor 7500 Series-Based Platform Design Guide* for default settings.
TESTLO[26-21]; TESTLO[19-1]	GPIO	I		See the *Intel® Xeon® Processor 7500 Series-Based Platform Design Guide* for default settings
TESTHI[3:1]	GPIO	I		See the *Intel® Xeon® Processor 7500 Series-Based Platform Design Guide* for default settings
VRMEN	GPIO1.1 (CMOS)	I	(r)	Voltage regulator module enable '0': QPI PLL uses on-die voltage regulator '1': QPI PLL uses LC-filtered power supplied to the socket
THERMALERT_N	GPIO3.3 (OD)	O	(s)	The THRMALERT_N (Therm Alert) will go active when the IOH temperature monitoring sensor detected that the IOH has reached its throttle threshold high.
THERMTRIP_N	GPIO3.3 (OD)	I/O	(s)	Assertion of THERMTRIP_N (Thermal Trip) indicates the IOH junction temperature has reached a level beyond which permanent silicon damage may occur.
TSIREF	Analog	I		Thermal sensor current reference connected to external resistor of 2.5 KOhm to GND.

Table 19-9. Controller Link Signals

Signal Name	Type	Direction	Signal Group	Description
CLCLK	CMOS	I/O	(m)	Clink bi-directional clock
CLDATA	CMOS	I/O	(m)	Clink bi-directional data
CLRST_N	CMOS	I	(m)	Active low Clink reset

Table 19-10. RMII Signals

Signal Name	Type	Direction	Signal Group	Description
RMIITXD[1:0]	RMII (GPIO)	O	(y)	Transmit data
RMIIRXD[1:0]	RMII (GPIO)	I	(y)	Receive data
RMIITXEN	RMII (GPIO)	O	(y)	Transmit enable
RMIICRSDV	RMII (GPIO)	I	(y)	Carrier sense/receive data valid
RMIICLK	RMII (GPIO)	I	(y)	Reference clock
RMIIMDIO	RMII (GPIO)	I/O	(y)	Data signal for PHY management bus
RMIIMDC	RMII (GPIO)	O	(y)	Clock for PHY management bus
RMIICLKREFOUT	RMII (GPIO)	O	(y)	50 MHz clock reference output

Table 19-11. Power and Ground (Sheet 1 of 2)

Signal Name	Voltage	Description
VCCAQPI{0}TX	1.1V	Intel QuickPath Interconnect analog power supply
VCCAQPI{0}PLL	1.1V	Intel QuickPath Interconnect analog supply voltage for PLL core
VCCAQPI{0}RX	1.1V	Intel QuickPath Interconnect analog power supply
VCCQPI{0/1}VRMTXOP0	1.1V	Intel QuickPath Interconnect TX VRM power. When VRMEN pin is set to 0, VCCQPIxVRMRXOPx pins are outputs; when set to 1, VCCQPIxVRMRXOPx are inputs. In normal mode, these are debug/observation signals to measure output of the internal VRMs. In bypass mode, internal VRMs are disabled and these pins supply external VCC 1.1 for TX PLL. They should not be shorted and connected as a power pin.
VCCQPI{0/1}VRMRXOP0	1.1V	Intel QuickPath Interconnect RX VRM power. When VRMEN pin is set to 0, VCCQPIxVRMRXOPx pins are outputs; when set to 1, VCCQPIxVRMRXOPx are inputs. In normal mode, these are debug/observation signals to measure output of the internal VRMs. In bypass mode, internal VRMs are disabled and these pins supply external VCC 1.1 for to 4 sets of RX DLLs. They should not be shorted and connected as a power pin.
VCCQPI{0/1}VRMRXOP1	1.1V	Intel QuickPath Interconnect RX VRM power. When VRMEN pin is set to 0, VCCQPIxVRMRXOPx pins are outputs; when set to 1, VCCQPIxVRMRXOPx are inputs. In normal mode, these are debug/observation signals to measure output of the internal VRMs. In bypass mode, internal VRMs are disabled and these pins supply external VCC 1.1 for to 4 sets of RX DLLs. They should not be shorted and connected as a power pin.
VCCQPI{0/1}VRMRXOP2	1.1V	Intel QuickPath Interconnect RX VRM power. When VRMEN pin is set to 0, VCCQPIxVRMRXOPx pins are outputs; when set to 1, VCCQPIxVRMRXOPx are inputs. In normal mode, these are debug/observation signals to measure output of the internal VRMs. In bypass mode, internal VRMs are disabled and these pins supply external VCC 1.1 for to 4 sets of RX DLLs. They should not be shorted and connected as a power pin.
VCCQPI{0/1}VRMRXOP3	1.1V	Intel QuickPath Interconnect RX VRM power. When VRMEN pin is set to 0, VCCQPIxVRMRXOPx pins are outputs; when set to 1, VCCQPIxVRMRXOPx are inputs. In normal mode, these are debug/observation signals to measure output of the internal VRMs. In bypass mode, internal VRMs are disabled and these pins supply external VCC 1.1 for to 4 sets of RX DLLs. They should not be shorted and connected as a power pin.
VCCAQPI{0/1}RXBG	1.1V	Intel QuickPath Interconnect analog power supply used exclusively by RX band-gap block.
VCCQPI{0/1}VRMRX0	1.8V	Intel QuickPath Interconnect external power, connect to 1.8 V VRM power bump
VCCQPI{0/1}VRMRX1	1.8V	Intel QuickPath Interconnect external power, connect to 1.8 V VRM power bump
VCCQPI{0/1}VRMRX2	1.8V	Intel QuickPath Interconnect external power, connect to 1.8 V VRM power bump
VCCQPI{0/1}VRMRX3	1.8V	Intel QuickPath Interconnect external power, connect to 1.8 V VRM power bump
VCCAPE	1.1V	VCC for PCI Express analog circuits

Table 19-11. Power and Ground (Sheet 2 of 2)

Signal Name	Voltage	Description
VCCAPEBG	1.5V	Analog VCC for PCI Express band gap circuit
VCCAPE1BG	1.5V	Analog VCC for PCI Express band gap circuit
VCCAPEPLL	1.1V	Analog VCC for PCI Express PLL analog core
VCCPEVRM	1.5V	PCI Express VRM power supply
VCCAPE1PLL	1.1V	Analog VCC for PCI Express PLL analog core. Note that the power to this pin is only used when the Internal PCIe VRM is not being used.
VCCDPE1PLL	1.1V	PCI Express PLL digital power supply
VCCPE1VRM	1.5V	PCI Express VRM power supply. Note that the power to this pin is only used when the Internal PCIe VRM is not being used.
VCCDDR18	1.8	1.8 V FOR DDR2
VTTDDR	--	See the Platform Design Guide for connection information
VCCDDR18	1.8V	1.8 V DDR I/O supply
VTTDDR	0.9V	0.9 V Termination Power for DDR IO
VCCXDP18	1.8V	XDP I/O voltage
VTTXDP	0.9V	1/2 of XDP
VCCCLPWRP	1.1V	CLINK I/O power
VCCEPW	1.1V	1.1 V AUX domain
VCCMISC33	3.3V	GPIO 3.3 V power
VCCMISC33EPW	3.3V	3.3 V AUX domain
VCCTS	1.5V	Thermal sensor high voltage power supply 1.5 V ±5%
VSS	0V	Ground

19.3 PCI Express Width Strapping

Table 19-12. PEWIDTH[5:0] Strapping Options

	IOU2		IOU0				IOU1			
PEWIDTH[5:0]	Port1	Port2	Port3	Port4	Port5	Port6	Port7	Port8	Port9	Port10
0	x2	x2	x4	x4	x4	x4	x4	x4	x4	x4
1	x2	x2	x4	x4	x4	x4	x8	Not present	x4	x4
10	x2	x2	x4	x4	x4	x4	x4	x4	x8	Not present
11	x2	x2	x4	x4	x4	x4	x8	Not present	x8	Not present
100	x2	x2	x8	Not present	x4	x4	x4	x4	x4	x4
101	x2	x2	x8	Not present	x4	x4	x8	Not present	x4	x4
110	x2	x2	x8	Not present	x4	x4	x4	x4	x8	Not present
111	x2	x2	x8	Not present	x4	x4	x8	Not present	x8	Not present
1000	x2	x2	x4	x4	x8	Not present	x4	x4	x4	x4
1001	x2	x2	x4	x4	x8	Not present	x8	Not present	x4	x4
1010	x2	x2	x4	x4	x8	Not present	x4	x4	x8	Not present
1011	x2	x2	x4	x4	x8	Not present	x8	Not present	x8	Not present
1100	x2	x2	x8	Not present	x8	Not present	x4	x4	x4	x4
1101	x2	x2	x8	Not present	x8	Not present	x8	Not present	x4	x4
1110	x2	x2	x8	Not present	x8	Not present	x4	x4	x8	Not present
1111	x2	x2	x8	Not present	x8	Not present	x8	Not present	x8	Not present
10000	x2	x2	x16	Not present	Not present	Not present	x4	x4	x4	x4
10001	x2	x2	x16	Not present	Not present	Not present	x8	Not present	x4	x4
10010	x2	x2	x16	Not present	Not present	Not present	x4	x4	x8	Not present
10011	x2	x2	x16	Not present	Not present	Not present	x8	Not present	x8	Not present
10100	x2	x2	x4	x4	x4	x4	x16	Not present	Not present	Not present
10101	x2	x2	x8	Not present	x4	x4	x16	Not present	Not present	Not present
10110	x2	x2	x4	x4	x8	Not present	x16	Not present	Not present	Not present
10111	x2	x2	x8	Not present	x8	Not present	x16	Not present	Not present	Not present
11000	x2	x2	x16	Not present	Not present	Not present	x16	Not present	Not present	Not present
11001	x2	x2	x16	Not present	Not present	Not present	x16	Not present	Not present	Not present
11010	x2	x2	x16	Not present	Not present	Not present	x16	Not present	Not present	Not present
11011	x2	x2	x16	Not present	Not present	Not present	x16	Not present	Not present	Not present
11100	Wait-on-BIOS									
11101	Wait-on-BIOS									
11110	Wait-on-BIOS									
11111	Wait-on-BIOS									
100000	x4	Not present	x4	x4	x4	x4	x4	x4	x4	x4
100001	x4	Not present	x4	x4	x4	x4	x8	Not present	x4	x4
100010	x4	Not present	x4	x4	x4	x4	x4	x4	x8	Not present
100011	x4	Not present	x4	x4	x4	x4	x8	Not present	x8	Not present
100100	x4	Not present	x8	Not present	x4	x4	x4	x4	x4	x4
100101	x4	Not present	x8	Not present	x4	x4	x8	Not present	x4	x4
100110	x4	Not present	x8	Not present	x4	x4	x4	x4	x8	Not present
100111	x4	Not present	x8	Not present	x4	x4	x8	Not present	x8	Not present
101000	x4	Not present	x4	x4	x8	Not present	x4	x4	x4	x4
101001	x4	Not present	x4	x4	x8	Not present	x8	Not present	x4	x4
101010	x4	Not present	x4	x4	x8	Not present	x4	x4	x8	Not present
101011	x4	Not present	x4	x4	x8	Not present	x8	Not present	x8	Not present
101100	x4	Not present	x8	Not present	x8	Not present	x4	x4	x4	x4
101101	x4	Not present	x8	Not present	x8	Not present	x8	Not present	x4	x4
101110	x4	Not present	x8	Not present	x8	Not present	x4	x4	x8	Not present
101111	x4	Not present	x8	Not present	x8	Not present	x8	Not present	x8	Not present
110000	x4	Not present	x16	Not present	Not present	Not present	x4	x4	x4	x4
110001	x4	Not present	x16	Not present	Not present	Not present	x8	Not present	x4	x4
110010	x4	Not present	x16	Not present	Not present	Not present	x4	x4	x8	Not present
110011	x4	Not present	x16	Not present	Not present	Not present	x8	Not present	x8	Not present
110100	x4	Not present	x4	x4	x4	x4	x16	Not present	Not present	Not present
110101	x4	Not present	x8	Not present	x4	x4	x16	Not present	Not present	Not present
110110	x4	Not present	x4	x4	x8	Not present	x16	Not present	Not present	Not present
110111	x4	Not present	x8	Not present	x8	Not present	x16	Not present	Not present	Not present
111000	x4	Not present	x16	Not present	Not present	Not present	x16	Not present	Not present	Not present
111001	x4	Not present	x16	Not present	Not present	Not present	x16	Not present	Not present	Not present
111010	x4	Not present	x16	Not present	Not present	Not present	x16	Not present	Not present	Not present
111011	x4	Not present	x16	Not present	Not present	Not present	x16	Not present	Not present	Not present

19.4 IOH Signal Strappings

Pin Name	Location	Connection
TEST0	A2	In Circuit Test: This signal should be connected to a test point on the motherboard. It is internally shorted to the package ground and can be used to determine if the corner ball on the IOH are correctly soldered down to the motherboard. This signal should NOT connect to ground on the motherboard. If TEST0 is not going to be used, it should be left as No Connect.
TEST1	A36	In Circuit Test: This signal should be connected to a test point on the motherboard. It is internally shorted to the package ground and can be used to determine if the corner ball on the IOH are correctly soldered down to the motherboard. This signal should NOT connect to ground on the motherboard. If TEST1 is not going to be used, it should be left as No Connect.
TEST2	B1	In Circuit Test: This signal should be connected to a test point on the motherboard. It is internally shorted to the package ground and can be used to determine if the corner ball on the IOH are correctly soldered down to the motherboard. This signal should NOT connect to ground on the motherboard. If TEST2 is not going to be used, it should be left as No Connect.
TEST3	AT1	In Circuit Test: This signal should be connected to a test point on the motherboard. It is internally shorted to the package ground and can be used to determine if the corner ball on the IOH are correctly soldered down to the motherboard. This signal should NOT connect to ground on the motherboard. If TEST3 is not going to be used, it should be left as No Connect.
TEST4	AT36	In Circuit Test: This signal should be connected to a test point on the motherboard. It is internally shorted to the package ground and can be used to determine if the corner ball on the IOH are correctly soldered down to the motherboard. This signal should NOT connect to ground on the motherboard. If TEST4 is not going to be used, it should be left as No Connect.
TESTHI1	P29	If Intel ME used: Pull up to P1V1_STBY_IOH via a 10K ohm ±5% resistor. If Intel ME not used: Pull up to P1V1_STBY_IOH or P1V1_VCC via a 10K ohm ±5% resistor.
TESTHI2	U28	Connect to debug port XDP. If Intel ME used: Pull up to P1V1_STBY_IOH via a 51 ohm ±1% resistor. If Intel ME not used: Pull up to P1V1_STBY_IOH or P1V1_VCC via a 51 ohm ±1% resistor.
TESTHI3	R29	If Intel ME used: Pull up to P1V1_STBY_IOH=VCCEPW via a 10K Ohm ±5% resistor. If Intel ME not used: Pull up to P1V1_STBY_IOH=VCCEPW or P1V1_VCC via a 10K Ohm ±5% resistor.
TESTLO1	AR12	Pull down via 1K ohm ±1% resistor
TESTLO2	AN9	Pull down via 1K ohm ±1% resistor
TESTLO3	AN8	Pull down via 1K ohm ±1% resistor
TESTLO4	AM6	Pull down via 1K ohm ±1% resistor
TESTLO5	AJ34	Pull down via 1K ohm ±1% resistor
NODEID2	AH34	Pull down via 100 ohm ±1% resistor
TESTHI[4]	AH33	Pull high via 10K ohm ±1% resistor
TESTLO8	AF35	Pull down via 1K ohm ±1% resistor
TESTLO9	AF34	Pull down via 0 ohm ±5% resistor
TESTLO10	AF32	Pull down via 1K ohm ±1% resistor
TESTLO11	AE34	Pull down via 1K ohm ±1% resistor
TESTLO12	AC32	Pull down via 1K ohm ±1% resistor
TESTLO13	AB30	Pull down via 1K ohm ±1% resistor
TESTLO14	AA29	Pull down via 100 ohm ±1% resistor
TESTLO15	Y28	Pull down via 1K ohm ±1% resistor

Pin Name	Location	Connection
TESTLO16	W27	Pull down via 1K ohm ±1% resistor
TESTLO17	V32	Pull down via 1K ohm ±1% resistor
TESTLO18	T27	Pull down via 100 ohm ±1% resistor
TESTLO19	R35	Pull down via 1K ohm ±1% resistor
TESTLO21	AD33	Pull down via 10K ohm ±1% resistor
TESTLO22	C33	Pull down via 10K ohm ±1% resistor
TESTLO23	AC29	Pull down via 10K ohm ±1% resistor
TESTLO24	AA26	Pull down via 10K ohm ±1% resistor
TESETLO26	D36	Pull down via 10K ohm ±1% resistor
XOROUT	AE33	Pull down via 10K ohm ±1% resistor

§

20 DC Electrical Specifications

In this section, each interface is broken down into groups of signals that have similar characteristics and buffer types.

20.1 DC Characteristics

This section documents the DC characteristics of Intel® 7500 chipset. The specification is split into several sections:

- Clocks
- PCI Express/ESI
- GPIO (CMOS) 1.1v I/O
- GPIO 3.3v (CMOS) I/O
- GPIO 3.3v (OD) I/O
- SMBus Interface
- JTAG Interface
- ME RMII Interface

Table 20-1. Clock DC Characteristics (Sheet 1 of 2)

Symbol	Signal Group	Parameter	Min	Nom	Max	Unit	Notes
133 MHz							
V_{IL}	(d)	Input Low Voltage	-0.150	0	0.150	V	1
V_{IH}	(d)	Input High Voltage	0.660	0.700	0.850	V	
$V_{CROSS(abs)}$	(d)	Absolute Crossing Point	0.250		0.550	V	2, 7
$V_{CROSS(rel)}$	(d)	Relative Crossing Point	0.250 + 0.5 x (V_{Havg} – 0.700)		0.550 - 0.5 x (0.700 - V_{Havg})	V	7, 8
ΔV_{CROSS}	(d)	Range of Crossing Points			0.140	V	
V_{OS}	(d)	Overshoot			V_{IH} + 0.300	V	3
V_{US}	(d)	Undershoot	-0.300			V	4
V_{RBM}	(d)	Ringback Margin	0.200			V	5
V_{TR}	(d)	Threshold Region	V_{CROSS} – 0.100		V_{CROSS} + 0.100	V	6
100 MHz							
V_{IL}	(j)	Input Low Voltage	-0.150	0		V	
V_{IH}	(j)	Input High Voltage	0.660	0.700	0.850	V	
$V_{CROSS(abs)}$	(j)	Absolute Crossing Point	0.250		0.550	V	2, 7
$V_{CROSS(rel)}$	(j)	Relative Crossing Point	0.250 + 0.5 x (V_{Havg} – 0.700)		0.550 + 0.5 x (V_{Havg} – 0.700)	V	7, 8
ΔV_{CROSS}	(j)	Range of Crossing Points			0.140	V	2
V_{OS}	(j)	Overshoot			V_{IH} + 0.300	V	3
V_{US}	(j)	Undershoot	-0.300			V	4

Table 20-1. Clock DC Characteristics (Sheet 2 of 2)

Symbol	Signal Group	Parameter	Min	Nom	Max	Unit	Notes
V_{RBM}	(j)	Ringback Margin	0.200			V	5
V_{TR}	(j)	Threshold Region	V_{CROSS} – 0.100		V_{CROSS} + 0.100	V	6

Notes:
1. Refer to Figure 20-1 Differential Clock Crosspoint Specification and Figure 20-2 Differential Clock Waveform.
2. Crossing voltage is defined as the instantaneous voltage when the rising edge of CORECLKP is equal to the falling edge of CORECLKN.
3. Overshoot is defined as the absolute value of the maximum voltage.
4. Undershoot is defined as the absolute value of the minimum voltage.
5. Ringback Margin is defined as the absolute voltage difference between the maximum Rising Edge Ringback and the maximum Falling Edge Ringback. Both maximum Rising and Falling Ringbacks should not cross the threshold region.
6. Threshold Region is defined as a region centered around the crossing point voltage in which the differential receiver switches. It includes input threshold hysteresis.
7. The crossing point must meet the absolute and relative crossing point specifications simultaneously.
8. VHavg (the average of V_{IH}) can be measured directly using “Vtop” on Agilent* scopes and “High” on Tektronix* scopes.

20.2 PCI Express* / ESI Interface DC Characteristics

Table 20-2. PCI Express / ESI Differential Transmitter (Tx) Output DC Characteristics

Symbol	Signal Group	Parameter	Min	Nom	Max	Unit	Notes
VTX-CM-DC-ACTIVE-IDLE-DELTA	(f) (k)	Absolute Delta of DC Common Mode Voltage During L0 and Electrical Idle	0		100	mV	1
VTX-CM-DC-LINE-DELTA	(f) (k)	Absolute Delta of DC Common Mode Voltage between D+ and D-	0		25	mV	1
VTX-IDLE-DIFFp	(f) (k)	Electrical Idle Differential Peak Output Voltage			20	mV	1
VTX-RCV-DETECT	(f) (k)	The amount of voltage change allowed during Receiver Detection			600	mV	
VTX-DC-CM	(f) (k)	The TX DC Common Mode Voltage	0		3.6	V	1
ITX-SHORT	(f) (k)	The Short Circuit Current Limit			90	mA	
ZTX-DIFF-DC	(f) (k)	DC Differential TX Impedance	80	100	120	Ω	
ZTX-DC	(f) (k)	Transmitter DC Impedance	40			Ω	

Notes:
1. Specified at the measurement point into a timing and voltage compliance test load and measured over any 250 consecutive TX UIs.

Table 20-3. PCI Express / ESI Differential Receiver (Rx) Input DC Characteristics

Symbol	Signal Group	Parameter	Min	Nom	Max	Unit	Notes
ZRX-DIFF-DC	(g) (l)	DC Differential Input Impedance	80	100	120	Ω	3
ZRX-DC	(g) (l)	DC Input Impedance	40	50	60	Ω	1, 2
ZRX-High-Imp-DC	(g) (l)	Power Down DC Input Common Mode Impedance	200			kΩ	4
VRX-IDLE-DET-DIFFp	(g) (l)	Electrical Idle Detect Threshold	65		175	mV	

Notes:

1. Specified at the measurement point and measured over any 250 consecutive UIs. If the clock to the RX and TX are not derived from the same reference clock, the TX UI recovered from 3500 consecutive UI must be used as a reference for the eye diagram.
2. A TRX-EYE=0.40UI provides for a total sum of 0.60 UI deterministic and random jitter budget for the Transmitter and interconnect collected any 250 consecutive UIs. The TRX-EYE-MEDIAN-to-MAX-JITTER specification ensures a jitter distribution in which the median and the maximum deviation from the median is less than half of the total .6 UI jitter budget collected over any 250 consecutive TX UIs. It should be noted that the median is not the same as the mean. The jitter median describes the point in time where the number of jitter points on either side is approximately equal as opposed to the averaged time value. If the clocks to the RX and TX are not derived from the same reference clock, the TX UI recovered from 3500 consecutive UI must be used as the reference for the eye diagram.
3. Impedance during all LTSSM states. When transitioning from a Fundamental Reset to Detect (the initial state of the LTSSM) there is a 5 ms transition time before Receiver termination values must be met on all un-configured Lanes of a Port.
4. The RX DC Common Mode Impedance that exists when no power is present or Fundamental Reset is asserted. This helps ensure that the Receiver Detect circuit will not falsely assume a Receiver is powered on when it is not. This term must be measured at 300 mV above the RX ground.

20.3 Miscellaneous DC Characteristics

Table 20-4. CMOS, JTAG, SMBUS, GPIO3.3V, and MISC DC Characteristics (Sheet 1 of 2)

Symbol	Signal Group	Parameter	Min	Nom	Max	Unit	Notes
GPIO1.1 (CMOS) I/O Signals							
V_{OH_CMOS}	(e,i,m,n,r)	Output High Voltage	0.25*Vcc1.1V			V	
V_{OL_CMOS}	(e,i,m,n,r)	Output Low Voltage			0.25*Vcc1.1V	V	
V_{IH_CMOS}	(e,i,m,n,r)	Input High Voltage	0.35*Vcc1.1V		Vcc1.1v+0.2	V	
V_{IL_CMOS}	(e,i,m,n,r)	Input Low Voltage	-0.2		0.35*Vcc1.1v	V	
I_{OH_CMOS}	(e,i,m,n,r)	Output High Current	4		4	mA	
I_{OL_CMOS}	(e,i,m,n,r)	Output Low Current	4		4	mA	
I_{LEAK_CMOS}	(e,i,m,n,r)	Leakage Current			15	µA	
C_{PAD_CMOS}	(e,i,m,n,r)	Pad Capacitance			7	pF	
GPIO3.3(OD) Signals							
$V_{OH_GPIO3.3}$	(s)	Output High Voltage	N/A		N/A	V	1
$V_{OL_GPIO3.3}$	(s)	Output Low Voltage			0.4	V	
$V_{IH_GPIO3.3}$	(s)	Input High Voltage	2.1			V	
$V_{IL_GPIO3.3}$	(s)	Input Low Voltage			0.8	V	
$I_{OL_GPIO3.3}$	(s)	Output Low Current			4	mA	
$I_{LEAK_GPIO3.3}$	(s)	Leakage Current			15	µA	
$C_{PAD_GPIO3.3}$	(s)	Pad Capacitance			10	pF	
SMBUS Signals							
V_{OH_SMBUS}	(t)	Output High Voltage	N/A			V	1
V_{OL_SMBUS}	(t)	Output Low Voltage			0.4	V	
V_{IH_SMBUS}	(t)	Input High Voltage	2.1			V	
V_{IL_SMBUS}	(t)	Input Low Voltage			0.8	V	
I_{OL_SMBUS}	(t)	Output Low Current			4	mA	
I_{LEAK_SMBUS}	(t)	Leakage Current			10	µA	
C_{PAD_SMBUS}	(t)	Pad Capacitance			10	pF	

Table 20-4. CMOS, JTAG, SMBUS, GPIO3.3V, and MISC DC Characteristics (Sheet 2 of 2)

Symbol	Signal Group	Parameter	Min	Nom	Max	Unit	Notes
JTAG and Misc GPIO1.1(OD) Signals							
V_{OH_JTAG}	(u)	Output High Voltage	N/A		N/A	V	1
V_{OL_JTAG}	(u)	Output Low Voltage			0.25*Vcc1.1V	V	
V_{IH_JTAG}	(u)	Input High Voltage	0.65*Vcc1.1V			V	
V_{IL_JTAG}	(u)	Input Low Voltage			0.35*Vcc1.1V	V	
I_{OL_JTAG}	(u)	Output Low Current	16			mA	
I_{LEAK_JTAG}	(u)	Leakage Current			15	µA	
C_{PAD_JTAG}	(u)	Pad Capacitance			7	pF	
RMII Signals							
V_{REF}	(y)	Bus High Reference	3.0	3.3	3.6	V	
V_{ABS}	(y)	Signal Voltage Range	-0.3		3.765	V	
V_{IL}	(y)	Input Low Voltage			0.8	V	
V_{IH}	(y)	Input High Voltage	2			V	
V_{OH}	(y)	Output High Voltage	2.4			V	
V_{OL}	(y)	Output Low Voltage	0		400	mV	
I_{IH}	(y)	Input High Current	0		200	µA	
I_{IL}	(y)	Input Low Current	-20		0	µA	
I_{LEAK}	(y)	Leakage Current	-20		20	µA	
V_{CKM}	(y)	Clock Midpoint Ref. Level			1.4	V	

Notes:
1. N/A for Open Drain pins.

Figure 20-1. Differential Measurement Point for Rise and Fall Time

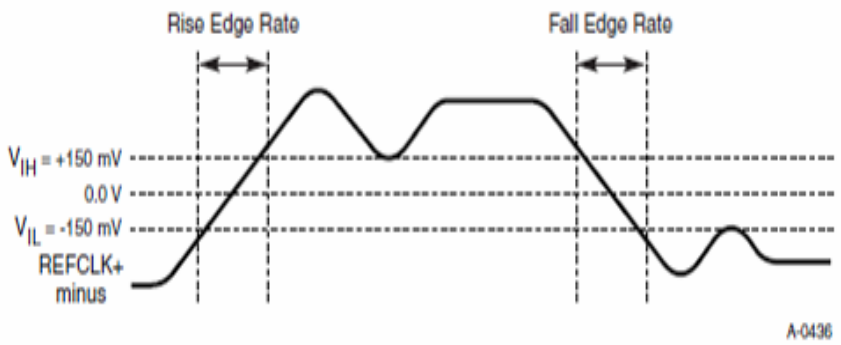

Figure 20-2. Differential Measurement Point for Ringback

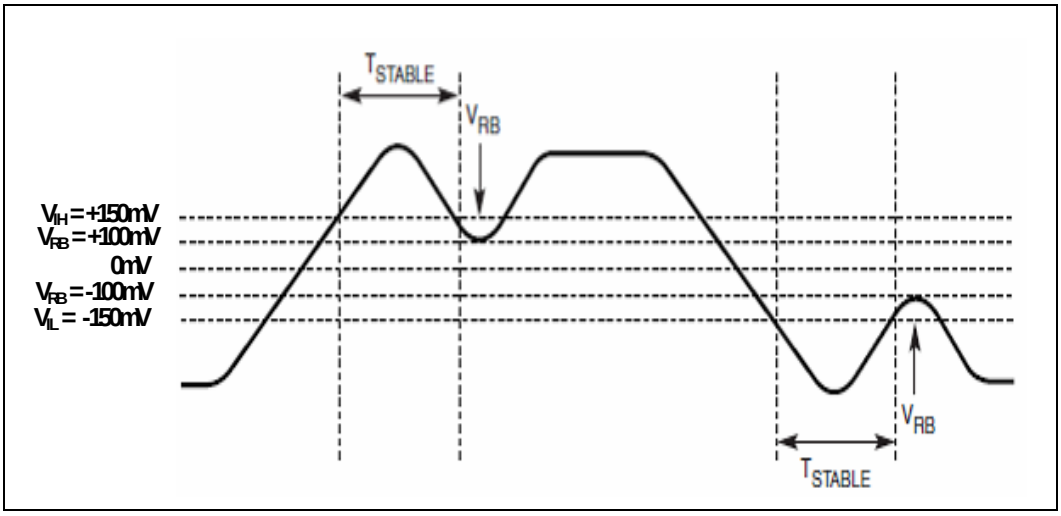

§

21 Configuration Register Space

This chapter describes both the PCI configuration space and CSRCFG configuration space registers.

21.1 Device Mapping: Functions Specially Routed by the IOH

All devices on the IOH reside on Bus 0. The following table describes the devices and functions that the IOH implements or routes specially.

Table 21-1. Functions Specially Handled by the IOH

Register Group	DID	Device	Function	Comment
ESI (Dev 0 in ESI mode)	0011_0100_0000_0xxxb	0	0	The ESI port will have the last 3 bits of the DID (xxx) Intel® 7500 Chipset = 111
PCI Express Root Port 0 (Dev#0 in PCIe mode)	3420h or 3421h	0	0	Dev#0 will work as a X4 Gen1 port. DID is depending on LEGACYIOH straps.
PCI Express Root Port 1	3408h	1	0	x4 or x2 max link width
PCI Express Root Port 2	3409h	2	0	x2 max link width
PCI Express Root Port 3	340Ah	3	0	x8, or x4 max link width
PCI Express Root Port 4	340Bh	4	0	x4 max link width
PCI Express Root Port 5	340Ch	5	0	x8 or x4 max link width
PCI Express Root Port 6	340Dh	6	0	x4 max link width
PCI Express Root Port 7	340Eh	7	0	x8, or x4 max link width
PCI Express Root Port 8	340Fh	8	0	x4 max link width
PCI Express Root Port 9	3410h	9	0	x8 or x4 max link width
PCI Express Root Port 10	3411h	10	0	x4 max link width
Intel QuickPath Interconnect Port 0	3425h	16	0	
Intel QuickPath Interconnect Port 0	3426h	16	1	
Intel QuickPath Interconnect Port 1	3427h	17	0	
Intel QuickPath Interconnect Port 1	3428h	17	1	
IOxAPIC	342Dh	19	0	
Core	342Eh	20	0	Address mapping, Intel VT-d, Ctrl/Status, Misc.Registers
Core	3422h	20	1	Scratchpads and GPIO registers
Core	3423h	20	2	IOH control/status and RAS registers
Core	3438h	20	3	Throttling registers

21.2 Unimplemented Devices/Functions and Registers

Configuration reads to unimplemented functions and devices will return all ones emulating a master abort response. There is no asynchronous error reporting when a configuration read master aborts. Configuration writes to unimplemented functions and devices will return a normal response to Intel QuickPath Interconnect.

Software should not attempt or rely on reads or writes to unimplemented registers or register bits. Unimplemented registers return all zeroes when read. Writes to unimplemented registers are ignored. For configuration writes to these registers, the completion is returned with a normal completion status (not master-aborted).

21.2.1 Register Attribute Definition

The bits in the configuration register descriptions will all be assigned attributes. The following table defines all the attributes types. All bits will be set to their default value by any reset that resets the IOH core, except the Sticky bits. Sticky bits are only reset by the PWRGOOD reset.

Table 21-2. Register Attributes Definitions (Sheet 1 of 2)

Attr	Description
RO	**Read Only:** These bits can only be read by software, writes have no effect. The value of the bits is determined by the hardware only.
RW	**Read / Write:** These bits can be read and written by software.
RWO	**Read / Write Once:** These bits can be read by software. After reset, these bits can only be written by software once, after which the bits becomes 'Read Only'.
RWL	**Read / Write Lock:** These bits can be read and written by software. Hardware can make these bits 'Read Only' via a separate configuration bit or other logic.
RW1C	**Read / Write 1 to Clear:** These bits can be read and cleared by software. Writing a '1' to a bit clears it, while writing a '0' to a bit has no effect.
RC	**Read Clear:** These bits can only be read by software, but a read causes the bits to be cleared. ***Note***: *Use of this attribute type is deprecated, as reads with side-effects are harmful for debug.*
RCW	**Read Clear / Write:** These bits can be read and written by software, but a read causes the bits to be cleared. *NOTE: Use of this attribute type is deprecated, as reads with side-effects are harmful for debug.*
ROS	**RO Sticky:** These bits can only be read by software, writes have no effect. The value of the bits is determined by the hardware only. These bits are only re-initialized to their default value by a PWRGOOD reset.
RWS	**R / W Sticky:** These bits can be read and written by software. These bits are only re-initialized to their default value by a PWRGOOD reset.
RW1CS	**R / W1C Sticky:** These bits can be read and cleared by software. Writing a '1' to a bit clears it, while writing a '0' to a bit has no effect. These bits are only re-initialized to their default value by a PWRGOOD reset.
RV	**Reserved:** These bits are reserved for future expansion and their value must not be modified by software. When writing these bits, software must preserve the value read. The bits are read-only must return '0' when read.
RWD	RW, value written will take effect on the next Link Layer init.
RWDS	RW, RW and sticky. Re-initialized to default value only with POWERGOOD reset. Value written will take effect on the next Link layer init.
RWDN	Reset to default only after next hard Intel QuickPath Interconnect link layer initialization occurs
RWNN	RW, reset to default when soft Intel QuickPath Interconnect link layer initialization occurs
RW1CN	RW1C, reset to default when hard Intel QuickPath Interconnect link layer initialization occurs
RONN	RO, reset to default when soft Intel QuickPath Interconnect link layer initialization occurs
RWP	RW, reset to default when hard Intel QuickPath Interconnect physical layer initialization occurs

Table 21-2. Register Attributes Definitions (Sheet 2 of 2)

Attr	Description
RWDP	RW, reset to default only after next hard Intel QuickPath Interconnect physical layer initialization occurs
RWPP	RW, reset to default when soft Intel QuickPath Interconnect physical layer initialization occurs
ROPP	RO, reset to default when soft Intel QuickPath Interconnect physical layer initialization occurs
RW1CPP	RW1C, reset to default when soft Intel QuickPath Interconnect physical layer initialization occurs
Modifiers	These can be appended to the end of base modifiers. Some of the attributes above include the modifiers
G	General modifier: This modifier is applicable to register attribute, for example, RWOG. Registers bits with G modifier are not specific to the Function and so are only reinitialized to their default value by a Conventional Reset (not Function Level Reset).
S	Sticky. For example RWS means R/W sticky
N	Reset to default when hard Intel QuickPath Interconnect link layer initialization occurs
NN	Reset to default when soft Intel QuickPath Interconnect link layer initialization occurs
P	Reset to default when hard Intel QuickPath Interconnect physical layer initialization occurs
PP	Reset to default when soft Intel QuickPath Interconnect physical layer initialization occurs
D	Late action on link/phy init. Typically value written will take effect on the next Link/Phy init.
DP	Reset to default only after next hard QPI physical layer initialization occurs. This attribute is mainly used by DFx spec.
DS	Re-initialized to default value only with POWERGOOD reset. Value written will take effect on the next Link layer init.
1C	1 clear: Writing a ‘1’ to a bit clears it, while writing a ‘0’ to a bit has no effect.
L	Lock: Hardware can make these bits ‘Read Only’ via a separate configuration bit or other logic.

21.3 RID Implementation in IOH

21.3.1 Background

Historically, a new value has been assigned to Revision ID (RID in PCI header space) for every stepping of a chipset. RID provides a way for software to identify a particular component stepping when a driver change or patch unique to that stepping is needed.

Operating systems detect RID during device enumeration to notify the user on the presence of new hardware. This may create problems for OEM when installing OS images on a new stepping of a product that is essentially identical to the previous stepping. In some cases, “New Hardware Found” messages may disrupt end user IT customer software images.

The solution is to implement a mechanism to select one of the two possible values to be read from the RID register. The default power-on value for the RID register will be called the Stepping Revision ID (SRID). When necessary, the BIOS can select a second value, called the Compatible Revision ID (CRID), to be read from the RID register.

Stepping Revision ID (SRID): This is the default power on value for mask/metal steppings.

Compatible Revision ID (CRID): The CRID functionality gives BIOS the flexibility to load OS drivers optimized for a previous revision of the silicon instead of the current revision of the silicon in order to reduce drivers updates and minimize changes to the OS image for minor optimizations to the silicon for yield improvement, or feature enhancement reasons that do not negatively impact the OS driver functionality.

21.3.2 Stepping Revision ID (SRID)

The SRID is a 4-bit hardwired value assigned by Intel, based on product’s stepping. The SRID is not a directly addressable PCI register. The SRID value is reflected through the RID register when appropriately addressed. The 4 bits of the SRID are reflected as the two least significant bits of the major and minor revision field respectively.

21.3.3 Conceptual Description

Following reset, the SRID value may be read from the RID register at offset 08h of all devices and functions in the IOH chipset, which reflects the actual product stepping. To select the CRID value, BIOS/configuration software writes a 32-bit key value of 00000069h to Bus 0, Device 0, Function 0 (ESI port) of the IOH’s RID register at offset 08h. Through a comparator, the written value is matched with a key value of “00000069h”. The comparator output is flopped and controls the selection of either CRID or RID. Subsequent reads to RID register at offset 08h will return CRID if the comparator flop is set. Otherwise it will always return the SRID when the comparator flop is reset. The internal RID comparator flop in the ESI port (Bus 0 device 0 Function 0) is a “write-once” register and gets locked after the first write to offset 08h.

The RID values for all devices and functions in IOH are changed together by writing the key value (00000069h) to the RID register in Bus 0, Device 0, Function 0. Writing to the RID register of other devices has no effect. A reset will change the RID selection back to SRID. The CRID values are programmed during manufacture to suit the customer needs and the BIOS can set the comparator as described above for software to read the CRID values.

21.4 Standard PCI Configuration Space (0x0 to 0x3F) - Type 0/1 Common Configuration Space

This section covers registers in the 0x0 to 0x3F region that are common to all the devices 0 to 22. Comments at the top of the table indicate what devices/functions the description applies to. Exceptions that apply to specific functions are noted in the individual bit descriptions.

21.4.1 Configuration Register Map

Table 21-3. PCIe Capability Registers for Devices with PCIe Extended Configuration Space

DID	VID		00h	PEXCAPH 100h
PCISTS	PCICMD		04h	
CCR		RID	08h	
HDR		CLS	0Ch	
			10h	
			14h	
			18h	
			1Ch	
			20h	
			24h	
			28h	
SID	SVID		2Ch	
			30h	
		CAPPTR[1]	34h	
			38h	
	INTP	INTL	3Ch	
EXPCAP	*NXTPTR*	*CAPID*	40h	
DEVCAP			44h	
DEVSTS	*DEVCON*		48h	
LNKCAP			4Ch	
LNKSTS	*LNKCON*		50h	
SLTCAP			54h	
SLTSTS	*SLTCON*		58h	
ROOTCAP	*ROOTCON*		5Ch	
ROOTSTS			60h	
DEVCAP2			64h	
DEVSTS2	*DEVCON2*		68h	
LNKCAP2			6Ch	
LNKSTS2	*LNKCON2*		70h	
SLTCAP2			74h	
SLTSTS2	*SLTCON2*		78h	
			7Ch	

Notes:

1. CAPPTR points to the first capability block which is at 0x40h
   Italics indicates register only present in devices/functions with extended configuration space.
   For the PCI Express port registers, please refer to the PCI Express register section.

21.4.2 Register Definitions - Common

This section describes the common header registers that are present in all PCI Express devices. It covers registers from offset 0x0 to 0x3F. Note that the PCI Express ports and DMA registers are being defined in their own sections and should be used instead of this section.

21.4.2.1 VID: Vendor Identification Register

The Vendor Identification Register contains the Intel identification number.

Device: 16, 17
Function: 0, 1

Device: 20
Function: 0-3

Offset: 00h

Bit	Attr	Default	Description
15:0	RO	8086h	**Vendor Identification Number** The value is assigned by PCI-SIG to Intel.

21.4.2.2 DID: Device Identification Register

Device ID register with IOH-specific device IDs.

Device: 16, 17
Function: 0, 1

Device: 20
Function: 0-3

Offset: 02h

Bit	Attr	Default	Description
15:0	RO	See Table 21-1	**Device Identification Number** The value is assigned by Intel to each product. IOH will have a unique device id for each of its single function devices and a unique device id for each function in the multi-function devices. IOH will also have a unique Device ID for Device#0.

21.4.2.3 PCICMD: PCI Command Register

This register defines the PCI 3.0 compatible command register values applicable to PCI Express space.

Device: 16, 17
Function: 0, 1

Device: 20
Function: 0-3

Offset: 04h

Bit	Attr	Default	Description
15:11	RV	0	Reserved (by PCI SIG)
10	RO	0	**Interrupt Disable** Controls the ability of DMA to generate legacy INTx interrupt (when legacy INTx mode is enabled). This bit does not affect the ability of the Express port to route interrupt messages received at the PCI Express port. 1: Legacy Interrupt message generation is disabled 0: Legacy Interrupt message generation is enabled If this bit transitions from 1->0 when a previous Assert_INTx message was sent but no corresponding Deassert_INTx message sent yet, a Deassert_INTx message is sent on this bit transition.
9	RO	0	**Fast Back-to-Back Enable** Not applicable to PCI Express and is hardwired to 0
8	RO	0	**SERR Enable** For PCI Express/ESI ports, this field enables notifying the internal core error logic of occurrence of an uncorrectable error (fatal or non-fatal) at the port. The internal core error logic of IOH then decides if/how to escalate the error further (pins/message and so on).This bit also controls the propagation of PCI Express ERR_FATAL and ERR_NONFATAL messages received from the port to the internal IOH core error logic. 1: Fatal and Non-fatal error generation and Fatal and Non-fatal error message forwarding is enabled 0: Fatal and Non-fatal error generation and Fatal and Non-fatal error message forwarding is disabled Refer to *PCI Express Base Specification, Revision 1.1 and post 1.1 Erratas and EC*'s* for details of how this bit is used in conjunction with other control bits in the Root Control register for forwarding errors detected on the PCI Express interface to the system core error logic. This bit has no impact on error reporting from the other devices - DMA, I/OxAPIC registers.
7	RO	0	**IDSEL Stepping/Wait Cycle Control** Not applicable to internal IOH devices. Hardwired to 0.
6	RO	0	**Parity Error Response** For PCI Express/ESI ports, IOH ignores this bit and always does ECC/parity checking and signaling for data/address of transactions both to and from IOH. This bit though affects the setting of bit 8 in the PCISTS (see bit 8 in Section 21.4.2.4) register. This bit has no impact on error reporting from the other devices - DMA, I/OxAPIC registers.
5	RO	0	**VGA palette snoop Enable** Not applicable to internal IOH devices. Hardwired to 0.
4	RO	0	**Memory Write and Invalidate Enable** Not applicable to internal IOH devices. Hardwired to 0.
3	RO	0	**Special Cycle Enable** Not applicable to PCI Express. Hardwired to 0.

Device: 16, 17
Function: 0, 1

Device: 20
Function: 0-3

Offset: 04h

Bit	Attr	Default	Description
2	RO	0	**Bus Master Enable** Controls the ability of the PCI Express/ESI port in generating/forwarding memory (including MSI writes) or I/O transactions (and not messages) or configuration transactions from the secondary side to the primary side. For DMA and I/OxAPIC, this bit enables them to generate memory write/MSI and memory read transactions (read applies only to DMA). 1: Enables the PCI Express/ESI port, I/OxAPIC or DMA to generate/ forward memory, config or I/O read/write requests. 0: The Bus Master is disabled. When this bit is 0, IOH root ports will treat upstream PCI Express memory writes/reads, IO writes/reads, and configuration reads and writes as unsupported requests (and follow the rules for handling unsupported requests). This behavior is also true towards transactions that are already pending in the IOH root port's internal queues when the BME bit is turned off. I/OxAPIC and DMA cannot generate any memory transactions when this bit is 0.
1	RO	0	**Memory Space Enable** 1: Enables a PCI Express/ESI port's memory range registers, internal I/ OxAPIC's MBAR register (ABAR range decode is not enabled by this bit) or DMA device's memory BARs to be decoded as valid target addresses for transactions from primary side. 0: Disables a PCI Express/ESI port's memory range registers (excluding the IOxAPIC range registers), internal I/OxAPIC's MBAR register (but not ABAR register) or DMA device's memory BARs to be decoded as valid target addresses for transactions from primary side. Note that if a PCI Express/ESI port's MSE bit is clear, that port can still be target of any memory transaction if subtractive decoding is enabled on that port.
0	RO	0	**IO Space Enable** Applies only to PCI Express/ESI ports 1: Enables the I/O address range, defined in the IOBASE and IOLIM registers of the PCI-to-PCI bridge header, for target decode from primary side 0: Disables the I/O address range, defined in the IOBASE and IOLIM registers of the PCI-to-PCI bridge header, for target decode from primary side Note that if a PCI Express/ESI port's IOSE bit is clear, that port can still be target of an I/O transaction if subtractive decoding is enabled on that port.

21.4.2.4 PCISTS: PCI Status Register

The PCI Status register is a 16-bit status register that reports the occurrence of various events associated with the primary side of the "virtual" PCI-PCI bridge embedded in PCI Express ports and also primary side of the other devices on the internal IOH bus.

Device: 19
Function: 0

Device: 16, 17
Function: 0, 1

Device: 20
Function: 0-3

Offset: 06h

Bit	Attr	Default	Description
15	RW1C	0	**Detected Parity Error** This bit is set by a device when it receives a packet on the primary side with an uncorrectable data error (that is, a packet with poison bit set or an uncorrectable data ECC error was detected at the XP-DP interface when ECC checking is done) or an uncorrectable address/control parity error. The setting of this bit is regardless of the Parity Error Response bit (PERRE) in the PCICMD register.
14	RO	0	**Signaled System Error** 1: The device reported fatal/non-fatal (and not correctable) errors it detected on its PCI Express interface. Software clears this bit by writing a '1' to it. For Express ports, this bit is also set (when SERR enable bit is set) when a FATAL/NON-FATAL message is forwarded from the Express link. Note that IOH internal 'core' errors (like parity error in the internal queues) are not reported via this bit. 0: The device did not report a fatal/non-fatal error
13	RO	0	**Received Master Abort** This bit is set when a device experiences a master abort condition on a transaction it mastered on the primary interface (IOH internal bus). Note that certain errors might be detected right at the PCI Express interface and those transactions might not 'propagate' to the primary interface before the error is detected (for example, accesses to memory above TOCM in cases where the PCIe interface logic itself might have visibility into TOCM). Such errors do not cause this bit to be set, and are reported via the PCI Express interface error bits (secondary status register). Conditions that cause bit 13 to be set, include: • Device receives a completion on the primary interface (internal bus of IOH) with Unsupported Request or master abort completion Status. This includes UR status received on the primary side of a PCI Express port on peer-to-peer completions also. • Device accesses to holes in the main memory address region that are detected by the Intel® QuickPath Interconnect source address decoder. • Other master abort conditions detected on the IOH internal bus amongst those listed in Chapter 7, "System Address Map".
12	RO	0	**Received Target Abort** This bit is set when a device experiences a completer abort condition on a transaction it mastered on the primary interface (IOH internal bus). Note that certain errors might be detected right at the PCI Express interface and those transactions might not 'propagate' to the primary interface before the error is detected (for example, accesses to memory above VTCSRBASE). Such errors do not cause this bit to be set, and are reported via the PCI Express interface error bits (secondary status register). Conditions that cause bit 12 to be set, include: • Device receives a completion on the primary interface (internal bus of IOH) with completer abort completion Status. This includes CA status received on the primary side of a PCI Express port on peer-to-peer completions also. • Accesses to Intel QuickPath Interconnect that return a failed completion status • Other completer abort conditions detected on the IOH internal bus amongst those listed in Chapter 7, "System Address Map".

Device: 19
Function: 0

Device: 16, 17
Function: 0, 1

Device: 20
Function: 0-3

Offset: 06h

Bit	Attr	Default	Description
11	RO	0	**Signaled Target Abort** This bit is set when a device signals a completer abort completion status on the primary side (internal bus of IOH). This condition includes a PCI Express port forwarding a completer abort status received on a completion from the secondary side and passed to the primary side on a peer2peer completion.
10:9	RO	0h	**DEVSEL# Timing** Not applicable to PCI Express. Hardwired to 0.
8	RO	0	**Master Data Parity Error** This bit is set by a device if the Parity Error Response bit in the PCI Command register is set and it receives a completion with poisoned data from the primary side or if it forwards a packet with data (including MSI writes) to the primary side with poison.
7	RO	0	**Fast Back-to-Back** Not applicable to PCI Express. Hardwired to 0.
6	RV	0	*Reserved*
5	RO	0	**66 MHz capable** Not applicable to PCI Express. Hardwired to 0.
4	RO	Dev_fun:def 16_1:0h 17_1:0h 20_3:0h 21_0:0h else:1h	**Capabilities List** This bit indicates the presence of a capabilities list structure
3	RO	0	**INTx Status** Indicates that a legacy INTx interrupt condition is pending internally in the DMA device. This bit has meaning only in the legacy interrupt mode. This bit is always 0 when MSI-X (see Section 21.12.4.7) has been selected for DMA interrupts. Note that the setting of the INTx status bit is independent of the INTx enable bit in the PCI command register, that is, this bit is set anytime the DMA engine is setup by its driver to generate any interrupt and the condition that triggers the interrupt has occurred, regardless of whether a legacy interrupt message was signaled to the ICH or not. Note that the INTx enable bit has to be set in the PCICMD register for DMA to generate a INTx message to the ICH. This bit is not applicable to PCI Express and ESI ports and this bit does not get set for interrupts forwarded from a PCI Express port to the ICH from downstream devices. This bit also does not apply to Perf Mon, I/OxAPIC and DF* register devices.
2:0	RV	0h	Reserved

21.4.2.5 RID: Revision Identification Register

This register contains the revision number of the IOH. The revision number steps the same across all devices and functions, that is, individual devices do not step their RID independently. Note that the revision id for the JTAG IDCODE register also steps with this register.

IOH supports the CRID feature where this register's value can be changed by BIOS.

Device: 19, 21
Function: 0

Device: 16, 17
Function: 0, 1

Device: 20
Function: 0-3

Offset: 08h

Bit	Attr	Default	Description
7:4	RO	0	**Major Revision** Steppings which require all masks to be regenerated. 1: A stepping 2: B stepping
3:0	RO	0	**Minor Revision** Incremented for each stepping which does not modify all masks. Reset for each major revision. 0: x0 stepping 1: x1 stepping 2: x2 stepping

21.4.2.6 CCR: Class Code Register

This register contains the Class Code for the device.

Device: 19
Function: 0

Device: 16, 17
Function: 0, 1

Device: 20
Function: 0-3

Offset: 09h

Bit	Attr	Default	Description
23:16	RO	Dev:def 13: 06h 14: 06h 15: 11h else: 08h	**BaseClass: Base Class** Provides the PCIe base class type. Most common registers will default to 08h. (Base system peripherals.) DF* functions related to PCIe and ESI will default to 06h (bridge devices) Performance monitoring (Dev #15) will default to 11h, indicating a "Signal Acquisition Device". ESI, PCIe, and CCRs are defined in their own register sections.
15:8	RO	Dev:def 15: 01h 19, 20: 00h else: 80h	**SubClass: Sub-Class** PCI Express/ESI ports, DMA device are covered in their own sections. For I/OxAPIC device (dev#19), this field is always fixed at 00h to indicate interrupt controller.
7:0	RO	Dev:def 19: 20h else: 00h	**RLProgInt: Register-Level Programming Interface** This field is hardwired to 20h for I/OxAPIC and is set to 00h for all other devices.

21.4.2.7 CLS: Cacheline Size Register

Device: 19
Function: 0

Device: 16, 17
Function: 0, 1

Device: 20
Function: 0-3

Offset: 0Ch

Bit	Attr	Default	Description
7:0	RW	0	**Cacheline Size** This register is set as RW for compatibility reasons only. Cacheline size for IOH is always 64B. IOH hardware ignore this setting.

21.4.2.8 HDR: Header Type Register

This register identifies the header layout of the configuration space.

Device: 19
Function: 0

Device: 16, 17
Function: 0, 1

Device: 20
Function: 0-3

Offset: 0Eh

Bit	Attr	Default	Description
7	RO	Dev: def 16:1 17:1 19:1 20:1	**Multi-function Device:** This bit is set for Devices 16, 17, 19 and 20.
6:0	RO	00h	**Configuration Layout** This field identifies the format of the configuration header layout. For devices defined in this section, this is type 0. (Type 1 devices are defined in their own sections)

21.4.2.9 SVID: Subsystem Vendor ID

Subsystem vendor ID.

Device: 16, 17
Function: 0, 1

Device: 20
Function: 0-3

Offset: 2Ch

Bit	Attr	Default	Description
7:0	RWO	0h	**Subsystem Vendor ID** Assigned by PCI-SIG for the subsystem vendor

21.4.2.10 SID: Subsystem Device ID

Subsystem device ID.

Device: 16, 17
Function: 0, 1

Device: 20
Function: 0-3

Offset: 2Eh

Bit	Attr	Default	Description
7:0	RWO	00h	**Subsystem Device ID** Assigned by the subsystem vendor to uniquely identify the subsystem

21.4.2.11 CAPPTR: Capability Pointer

The CAPPTR is used to point to a linked list of additional capabilities implemented by the device. It provides the offset to the first set of capabilities registers located in the PCI compatible space from 40h.

Device: 19
Function: 0

Device: 16, 17
Function: 0, 1

Device: 20
Function: 0-3

Offset: 34h

Bit	Attr	Default	Description
7:0	RO	Dev_fun: Def 16_0:50h 16_1:00h 17_0:50h 17-1:00h 19_0:6Ch 20_3:00h else:40h	**Capability Pointer** Points to the first capability structure for the device.

21.4.2.12 INTL: Interrupt Line Register

The Interrupt Line register is used to communicate interrupt line routing information between initialization code and the device driver.

Device: 19
Function: 0

Device: 16, 17
Function: 0, 1

Device: 20
Function: 0-3

Offset: 3Ch

Bit	Attr	Default	Description
7:0	RO	0	**Interrupt Line** This bit is RW for devices that can generate a legacy INTx message and is needed only for compatibility purposes.

21.4.2.13 INTP: Interrupt Pin Register

Indicates what INTx message a device generates. This register has no meaning for the IOH devices covered by this section.

Device: 19
Function: 0

Device: 16, 17
Function: 0, 1

Device: 20
Function: 0-3

Offset: 3Dh

Bit	Attr	Default	Description
7:0	RO	0	**Interrupt Pin** Only DMA and PCIe are capable of generating INTx interrupt (see INTPIN register in the respective sections). These bits have no meaning for the IOH devices covered by this section and are hard coded to '0.

21.4.3 Register Definitions - Extended Config Space

The registers in this section are common for devices/functions with extended configuration space. These registers allow software to access the extended space while running under shrink wrapped OS's. The only exceptions are that the PCI Express ports and DMA registers, which may have additional characteristics are being defined in their own respective sections.

21.4.3.1 CAPID: PCI Express Capability List Register

The PCI Express Capability List register enumerates the PCI Express Capability structure in the PCI 3.0 configuration space.

Device: 20
Function: 0-2
Offset: 40h

Bit	Attr	Default	Description
7:0	RO	10h	Capability ID Provides the PCI Express capability ID assigned by PCI-SIG.

21.4.3.2 NXTPTR: PCI Express Next Capability List Register

The PCI Express Capability List register enumerates the PCI Express Capability structure in the PCI 3.0 configuration space.

Device: 20
Function: 0-2
Offset: 41h

Bit	Attr	Default	Description
7:0	RO	0	**Next Ptr** This field is set to the PCI PM capability.

21.4.3.3 EXPCAP: PCI Express Capabilities Register

The PCI Express Capabilities register identifies the PCI Express device type and associated capabilities.

Device: 20
Function: 0-2

Offset: 42h

Bit	Attr	Default	Description
15:14	RV	0h	Reserved
13:9	RO	00h	**Interrupt Message Number** Applies (that is, meaningful) only to the root ports and does not apply to the DMA register devices. This field indicates the interrupt message number that is generated for PM/HP/BW-change events. When there are more than one MSI interrupt Number, this register field is required to contain the offset between the base Message Data and the MSI Message that is generated when the associated status bits in this capability register are set. IOH assigns the first vector for PM/HP/BW-change events and so this field is set to 0.
8	RO	0	**Slot Implemented** Applies only to the root ports and does not apply to the DMA device. 1: indicates that the PCI Express link associated with the port is connected to a slot. 0: indicates no slot is connected to this port. This register bit is of type “write once” and is controlled by BIOS/special initialization firmware.
7:4	RO	1001	**Device/Port Type** This field identifies the type of device. It is set to 0100 for all the Express ports and 1001 for the DMA register device.
3:0	RO	2h	**Capability Version** This field identifies the version of the PCI Express capability structure. Set to 2h for PCI Express and DMA devices for compliance with the extended base registers.

21.4.3.4 DEVCAP: PCI Express Device Capabilities Register

The PCI Express Device Capabilities register identifies device specific information for the device.

Device: 20
Function: 0-2

Offset: 44h

Bit	Attr	Default	Description
31:28	RV	0h	Reserved
27:26	RO	0h	**Captured Slot Power Limit Scale** Does not apply to root ports or integrated devices
25:18	RO	0h	**Captured Slot Power Limit Value** Does not apply to root ports or integrated devices
17:16	RV	0h	Reserved
15	RO	1h	**Role Based Error Reporting:** IOH is 1.1 compliant and so supports this feature
14	RO	0h	Power Indicator Present on Device Does not apply to root ports or integrated devices
13	RO	0h	Attention Indicator Present Does not apply to root ports or integrated devices

Device: 20 Function: 0-2 Offset: 44h			
Bit	**Attr**	**Default**	**Description**
12	RO	0	Attention Button Present Does not apply to root ports or integrated devices
11:9	RO	000	Endpoint L1 Acceptable Latency Does not apply to IOH
8:6	RO	000	Endpoint L0s Acceptable Latency Does not apply to IOH
5	RO	0	Extended Tag Field Supported IOH devices support only 5-bit tag field.
4:3	RO	0h	Phantom Functions Supported IOH does not support phantom functions.
2:0	RO	000	Max Payload Size Supported IOH supports 256B payloads on Express port and 128B on the reminder of the devices.

21.4.3.5 DEVCON: PCI Express Device Control Register

The PCI Express Device Control register controls PCI Express specific capabilities parameters associated with the device.

Device: 20 Function: 0-2 Offset: 48h			
Bit	**Attr**	**Default**	**Description**
15	RV	0h	Reserved
14:12	RO	000	**Max_Read_Request_Size** Express/ESI/DMA ports in IOH do not generate requests greater than 128B and this field is ignored.
11	RO	0	**Enable No Snoop** Not applicable to root ports since they never set the 'No Snoop' bit for transactions they originate (not forwarded from peer) to PCI Express. For DMA, when this bit is clear, all DMA transactions must be snooped. When set, DMA transactions to main memory can utilize No Snoop optimization under the guidance of the device driver. This bit has no impact on forwarding of NoSnoop attribute on peer requests.
10	RO	0	**Auxiliary Power Management Enable** Not applicable to IOH
9	RO	0	**Phantom Functions Enable** Not applicable to IOH since it never uses phantom functions as a requester.
8	RO	0h	**Extended Tag Field Enable** This bit enables the PCI Express port/ESI to use an 8-bit Tag field as a requester.

Device: 20
Function: 0-2

Offset: 48h

Bit	Attr	Default	Description
7:5	RO	000	**Max Payload Size** This field is set by configuration software for the maximum TLP payload size for the PCI Express port. As a receiver, the IOH must handle TLPs as large as the set value. As a requester (that is, for requests where IOH's own RequesterID is used), it must not generate TLPs exceeding the set value. Permissible values that can be programmed are indicated by the Max_Payload_Size_Supported in the Device Capabilities register: 000: 128B max payload size 001: 256B max payload size (applies only to standard PCI Express ports and other devices alias to 128B) others: alias to 128B
4	RO	0	**Enable Relaxed Ordering** Not applicable to root ports since they never set relaxed ordering bit as a requester (this does not include tx forwarded from peer devices). For DMA, when this bit is clear, all DMA transactions must follow strict ordering. When set, DMA transactions are allowed to be relaxed ordered under the guidance of the device driver. This bit has no impact on forwarding of relaxed ordering attribute on peer requests.
3	RO	0	**Unsupported Request Reporting Enable** Applies only to the PCI Express/ESI ports. This bit controls the reporting of unsupported requests that IOH itself detects on requests its receives from a PCI Express/ESI port. 0: Reporting of unsupported requests is disabled 1: Reporting of unsupported requests is enabled. Refer to *PCI Express Base Specification, Revision 1.1 and post 1.1 Erratas and EC*'s* for complete details of how this bit is used in conjunction with other bits to UR errors.
2	RO	0	**Fatal Error Reporting Enable** Applies only to the PCI Express/ESI ports. Controls the reporting of fatal errors that IOH detects on the PCI Express/ESI interface. 0: Reporting of Fatal error detected by device is disabled 1: Reporting of Fatal error detected by device is enabled Refer to *PCI Express Base Specification, Revision 1.1 and post 1.1 Erratas and EC*'s* for complete details of how this bit is used in conjunction with other bits to report errors. For the PCI Express/ESI ports, this bit is not used to control the reporting of other internal component uncorrectable fatal errors (at the port unit) in any way.
1	RO	0	**Non Fatal Error Reporting Enable** Applies only to the PCI Express/ESI ports. Controls the reporting of non-fatal errors that IOH detects on the PCI Express/ESI interface or any non-fatal errors that DMA detect 0: Reporting of Non Fatal error detected by device is disabled 1: Reporting of Non Fatal error detected by device is enabled Refer to *PCI Express Base Specification, Revision 1.1 and post 1.1 Erratas and EC*'s* for complete details of how this bit is used in conjunction with other bits to report errors. For the PCI Express/ESI ports, this bit is not used to control the reporting of other internal component uncorrectable non-fatal errors (at the port unit) in any way.

Device: 20 Function: 0-2 Offset: 48h			
Bit	**Attr**	**Default**	**Description**
0	RO	0	**Correctable Error Reporting Enable** Applies only to the PCI Express/ESI ports. Controls the reporting of correctable errors that IOH detects on the PCI Express/ESI interface 0: Reporting of link Correctable error detected by the port is disabled 1: Reporting of link Correctable error detected by port is enabled Refer to *PCI Express Base Specification, Revision 1.1 and post 1.1 Erratas and EC*'s* for complete details of how this bit is used in conjunction with other bits to report errors. For the PCI Express/ESI ports, this bit is not used to control the reporting of other internal component correctable errors (at the port unit) in any way.

21.4.3.6 DEVSTS: PCI Express Device Status Register

The PCI Express Device Status register provides information about PCI Express device specific parameters associated with the device.

Device: 20 Function: 0-2 Offset: 4Ah			
Bit	**Attr**	**Default**	**Description**
15:6	RV	0	*Reserved.*
5	RO	0	**Transactions Pending** Does not apply to root/ESI ports, I/OxAPIC bit hardwired to 0 for these devices. 1: indicates that the DMA device has outstanding Non-Posted Request which it has issued either towards main memory or a peer PCI Express port, which have not been completed. 0: DMA reports this bit cleared only when all Completions for any outstanding Non-Posted Requests it owns have been received.
4	RO	0	**AUX Power Detected** Does not apply to IOH
3	RO	0	**Unsupported Request Detected** This bit applies only to the root/ESI ports and does not apply to DMA, I/OxAPIC devices hardwire this bit to 0. This bit indicates that the root port detected an Unsupported Request. Errors are logged in this register regardless of whether error reporting is enabled or not in the Device Control Register. 1: Unsupported Request detected at the device/port. These unsupported requests are NP requests inbound that the root port received and it detected them as unsupported requests (for example, address decoding failures that the root port detected on a packet, receiving inbound lock reads, BME bit is clear, and so on). Note that this bit is not set on peer2peer completions with UR status that are forwarded by the root port to the PCIe link. 0: No unsupported request detected by the root port
2	RO	0	**Fatal Error Detected** This bit applies only to the root/ESI ports and does not apply to DMA, I/OxAPIC devices hardwire this bit to 0. This bit indicates that a fatal (uncorrectable) error is detected by the device. Errors are logged in this register regardless of whether error reporting is enabled or not in the Device Control register. 1: Fatal errors detected 0: No Fatal errors detected

Device: 20 Function: 0-2 Offset: 4Ah			
Bit	**Attr**	**Default**	**Description**
1	RO	0	**Non Fatal Error Detected** This bit applies only to the root/ESI ports and does not apply to DMA, I/OxAPIC devices hardwire this bit to 0. This bit gets set if a non-fatal uncorrectable error is detected by the device. Errors are logged in this register regardless of whether error reporting is enabled or not in the Device Control register. 1: Non Fatal errors detected 0: No non-Fatal Errors detected
0	RO	0	**Correctable Error Detected** This bit applies only to the root/ESI ports and does not apply to DMA, I/OxAPIC devices hardwire this bit to 0. This bit gets set if a correctable error is detected by the device. Errors are logged in this register regardless of whether error reporting is enabled or not in the PCI Express Device Control register. 1: correctable errors detected 0: No correctable errors detected

21.4.3.7 LNKCAP: PCI Express Link Capabilities Register

The Link Capabilities register identifies the PCI Express specific link capabilities.

Device: 20 Function: 0-2 Offset: 4Ch			
Bit	**Attr**	**Default**	**Description**
31:24	RO	0	Port Number This field indicates the PCI Express port number for the link and is initialized by software/BIOS.
23:22	RV	0h	*Reserved.*
21	RO	1	**Link Bandwidth Notification Capability** A value of 1b indicates support for the Link Bandwidth Notification status and interrupt mechanisms.
20	RO	1	**Data Link Layer Link Active Reporting Capable** IOH supports reporting status of the data link layer so software knows when it can enumerate a device on the link or otherwise know the status of the link.
19	RO	1	**Surprise Down Error Reporting Capable** IOH supports reporting a surprise down error condition
18	RO	0	**Clock Power Management** Does not apply to IOH.
17:15	RO	7h	**L1 Exit Latency** IOH does not support L1 ASPM
14:12	RO	7h	**L0s Exit Latency**
11:10	RO	01	**Active State Link PM Support** Only L0s is supported

Device: 20 Function: 0-2 Offset: 4Ch			
Bit	**Attr**	**Default**	**Description**
9:4	RO	0	**Maximum Link Width** This field indicates the maximum width of the given PCI Express Link attached to the port. 000001: x1 000010: x2[1] 000100: x4 001000: x8 010000: x16 Others - *Reserved* This is left as a RWO register for bios to update based on the platform usage of the links.
3:0	RO	0	**Link Speeds Supported** IOH supports both 2.5 Gbps and 5Gbps speeds if Gen2_OFF fuse is OFF else it supports only Gen1 This register is RWO when Gen2_OFF so that BIOS can change the supported speeds field to be 0001b (Gen1 only) if the board routing is not capable of Gen2 (even though IOH silicon itself is capable of Gen2) This bit is RWO if Gen2_OFF fuse is OFF and is RO if Gen2_OFF fuse is ON.

Notes:

1. There are restrictions with routing x2 lanes from IOH to a slot. See Section 5.2 for details.

21.4.3.8 LNKCON: PCI Express Link Control Register

The PCI Express Link Control register controls the PCI Express Link specific parameters.

Device: 20 Function: 0-2 Offset: 50h			
Bit	**Attr**	**Default**	**Description**
15:12	RV	0	Reserved
11	RO	0	**Link Autonomous Bandwidth Interrupt Enable** When set to 1b this bit enables the generation of an interrupt to indicate that the Link Autonomous Bandwidth Status bit has been set.
10	RO	0	**Link Bandwidth Management Interrupt Enable** When set to 1b this bit enables the generation of an interrupt to indicate that the Link Bandwidth Management Status bit has been set.
9	RO	0	**Hardware Autonomous Width Disable** IOH never changes a configured link width for reasons other than reliability.
8	RO	0	**Enable Clock Power Management** N/A to IOH
7	RO	0	**Extended Synch** This bit when set forces the transmission of additional ordered sets when exiting L0s and when in recovery. See *PCI Express Base Specification, Revision 1.1 and post 1.1 Erratas and EC*'s* for details.
6	RO	0	**Common Clock Configuration** IOH does nothing with this bit

Device: 20 Function: 0-2 Offset: 50h			
Bit	**Attr**	**Default**	**Description**
5	RO	0	**Retrain Link** A write of 1 to this bit initiates link retraining in the given PCI Express port by directing the LTSSM to the recovery state if the current state is [L0, L0s or L1]. If the current state is anything other than L0, L0s, L1 then a write to this bit does nothing. This bit always returns 0 when read. If the Target Link Speed field has been set to a non-zero value different than the current operating speed, then the LTSSM will attempt to negotiate to the target link speed. It is permitted to write 1b to this bit while simultaneously writing modified values to other fields in this register. When this is done, all modified values that affect link retraining must be applied in the subsequent retraining.
4	RO	0	**Link Disable** This field controls whether the link associated with the PCI Express port is enabled or disabled. When this bit is a 1, a previously configured link (a link that has gone past the polling state) would return to the "disabled" state as defined in the *PCI Express Base Specification, Revision 1.1 and post 1.1 Erratas and EC*'s*. When this bit is clear, an LTSSM in the "disabled" state goes back to the detect state. 0: Enables the link associated with the PCI Express port 1: Disables the link associated with the PCI Express port
3	RO	0	**Read Completion Boundary** Set to zero to indicate IOH could return read completions at 64B boundaries
2	RV	0	*Reserved.*
1:0	RO	00	**Active State Link PM Control** When 01b or 11b, L0s on transmitter is enabled, otherwise it is disabled.

21.4.3.9 LNKSTS: PCI Express Link Status Register

The PCI Express Link Status register provides information on the status of the PCI Express Link such as negotiated width, training, and so on.

Device: 20 Function: 0-2 Offset: 52h			
Bit	**Attr**	**Default**	**Description**
15	RO	0	**Link Autonomous Bandwidth Status** This bit is set to 1b by hardware to indicate that hardware has autonomously changed link speed or width, without the port transitioning through DL_Down status, for reasons other than to attempt to correct unreliable link operation. IOH sets this bit when it receives eight consecutive TS1 or TS2 ordered sets with the Autonomous Change bit set. Note that if the status bit is set by hardware in the same clock software clears the status bit, the status bit should remain set and if MSI is enabled, the hardware should trigger a new MSI.
14	RO	0	**Link Bandwidth Management Status** This bit is set to 1b by hardware to indicate that either of the following has occurred without the port transitioning through DL_Down status: a) A link retraining initiated by a write of 1b to the Retrain Link bit has completed b) Hardware has autonomously changed link speed or width to attempt to correct unreliable link operation Note that if the status bit is set by hardware in the same clock software clears the status bit, the status bit should remain set and if MSI is enabled, the hardware should trigger a new MSI.

Device: 20
Function: 0-2

Offset: 52h

Bit	Attr	Default	Description
13	RO	0	Data Link Layer Link Active Set to 1b when the Data Link Control and Management State Machine is in the DL_Active state, 0b otherwise. On a downstream port or upstream port, when this bit is 0b, the transaction layer associated with the link will abort all transactions that would otherwise be routed to that link.
12	RO	1	Slot Clock Configuration This bit indicates whether IOH receives clock from the same xtal that also provides clock to the device on the other end of the link. 1: indicates that same xtal provides clocks to devices on both ends of the link 0: indicates that different xtals provide clocks to devices on both ends of the link
11	RO	0	Link Training This field indicates the status of an ongoing link training session in the PCI Express port 0: LTSSM has exited the recovery/configuration state 1: LTSSM is in recovery/configuration state or the Retrain Link was set but training has not yet begun. The IOH hardware clears this bit once LTSSM has exited the recovery/ configuration state. Refer to *PCI Express Base Specification, Revision 1.1 and post 1.1 Erratas and EC*'s* for details of which states within the LTSSM would set this bit and which states would clear this bit.
10	RV	0	**Reserved**
9:4	RO	0	**Negotiated Link Width** This field indicates the negotiated width of the given PCI Express link after training is completed. Only x1, x2, x4 and x8 link width negotiations are possible in IOH. A value of 0x01 in this field corresponds to a link width of x1, 0x02 indicates a link width of x2 and so on, with a value of 0x8 for a link width of x8. The value in this field is reserved and could show any value when the link is not up. Software determines if the link is up or not by reading bit 13 of this register.
3:0	RO	0	**Current Link Speed** This field indicates the negotiated Link speed of the given PCI Express Link. 0001- 2.5 Gbps 0010 - 5Gbps (IOH will never set this value when Gen2_OFF fuse is blown) Others - *Reserved* The value in this field is not defined and could show any value, when the link is not up. Software determines if the link is up or not by reading bit 13 of this register.

21.4.3.10 SLTCAP: PCI Express Slot Capabilities Register

The Slot Capabilities register identifies the PCI Express specific slot capabilities. These registers must be ignored by software on the ESI links.

Device: 20
Function: 0-2

Offset: 54h

Bit	Attr	Default	Description
31:19	RO	0	Physical Slot Number This field indicates the physical slot number of the slot connected to the PCI Express port and is initialized by bios.
18	RO	0	**Command Complete Not Capable:** IOH is capable of command complete interrupt.
17	RO	0	**Electromechanical Interlock Present** This bit when set indicates that an Electromechanical Interlock is implemented on the chassis for this slot and that lock is controlled by bit 11 in Slot Control register. Bios note: this capability is not set if the Electromechanical Interlock control is connected to main slot power control.
16:15	RO	0	**Slot Power Limit Scale** This field specifies the scale used for the Slot Power Limit Value and is initialized by bios. IOH uses this field when it sends a Set_Slot_Power_Limit message on PCI Express. Range of Values: 00: 1.0x 01: 0.1x 10: 0.01x 11: 0.001x
14:7	RO	0	**Slot Power Limit Value** This field specifies the upper limit on power supplied by slot in conjunction with the Slot Power Limit Scale value defined previously Power limit (in Watts) = SPLS x SPLV. This field is initialized by bios. IOH uses this field when it sends a Set_Slot_Power_Limit message on PCI Express. Design note: IOH can chose to send the Set_Slot_Power_Limit message on the link at first link up condition without regards to whether this register and the Slot Power Limit Scale register are programmed yet by bios. IOH must then be designed to discard a received Set_Slot_Power_Limit message without an error.
6	RO	0	**Hot-plug Capable** This field defines hot-plug support capabilities for the PCI Express port. 0: indicates that this slot is not capable of supporting Hot-plug operations. 1: indicates that this slot is capable of supporting hot-plug operations This bit is programed by BIOS based on the system design. This bit must be programmed by bios to be consistent with the VPP enable bit for the port.

Device: 20
Function: 0-2

Offset: 54h

Bit	Attr	Default	Description
5	RO	0	Hot-Plug Surprise This field indicates that a device in this slot may be removed from the system without prior notification (like for instance a PCI Express cable). 0: indicates that hot-plug surprise is not supported 1: indicates that hot-plug surprise is supported Note that if platform implemented cable solution (either direct or via a SIOM with repeater), on a port, then this could be set. BIOS programs this field with a 0 for CEM/SIOM FFs. This bit is used by IOH hardware to determine if a transition from DL_active to DL_Inactive is to be treated as a surprise down error or not. If a port is associated with a hotpluggable slot and the hotplug surprise bit is set, then any transition to DL_Inactive is not considered an error. Refer to *PCI Express Base Specification, Revision 1.1 and post 1.1 Erratas and EC*'s* for further details.
4	RO	0	**Power Indicator Present** This bit indicates that a Power Indicator is implemented for this slot and is electrically controlled by the chassis. 0: indicates that a Power Indicator that is electrically controlled by the chassis is not present 1: indicates that Power Indicator that is electrically controlled by the chassis is present BIOS programs this field with a 1 for CEM/SIOM FFs and a 0 for Express cable.
3	RO	0	**Attention Indicator Present** This bit indicates that an Attention Indicator is implemented for this slot and is electrically controlled by the chassis 0: indicates that an Attention Indicator that is electrically controlled by the chassis is not present 1: indicates that an Attention Indicator that is electrically controlled by the chassis is present BIOS programs this field with a 1 for CEM/SIOM FFs.
2	RO	0	**MRL Sensor Present** This bit indicates that an MRL Sensor is implemented on the chassis for this slot. 0: indicates that an MRL Sensor is not present 1: indicates that an MRL Sensor is present BIOS programs this field with a 0 for SIOM/Express cable and with either 0 or 1 for CEM depending on system design.
1	RO	0	**Power Controller Present** This bit indicates that a software controllable power controller is implemented on the chassis for this slot. 0: indicates that a software controllable power controller is not present 1: indicates that a software controllable power controller is present BIOS programs this field with a 1 for CEM/SIOM FFs and a 0 for Express cable.
0	RO	0	**Attention Button Present** This bit indicates that the Attention Button event signal is routed (from slot or on-board in the chassis) to the IOH's hotplug controller. 0: indicates that an Attention Button signal is routed to IOH 1: indicates that an Attention Button is not routed to IOH BIOS programs this field with a 1 for CEM/SIOM FFs.

21.4.3.11 SLTCON: PCI Express Slot Control Register

The Slot Control register identifies the PCI Express specific slot control parameters for operations such as Hot-Plug and Power Management.

Device: 20
Function: 0-2
Offset: 58h

Bit	Attr	Default	Description
15:13	RV	0h	*Reserved.*
12	RO	0	**Data Link Layer State Changed Enable** When set to 1, this field enables software notification when Data Link Layer Link Active field is changed
11	RO	0	**Electromechanical Interlock Control** When software writes either a 1 to this bit, IOH pulses the EMIL pin per *PCI Express Server/Workstation Module Electromechanical Spec Rev 0.5a*. Write of 0 has no effect. This bit always returns a 0 when read. If electromechanical lock is not implemented, then either a write of 1 or 0 to this register has no effect.
10	RO	1	**Power Controller Control** If a power controller is implemented, when written sets the power state of the slot per the defined encodings. Reads of this field must reflect the value from the latest write, even if the corresponding hot-plug command is not executed yet at the VPP, unless software issues a write without waiting for the previous command to complete in which case the read value is undefined. 0: Power On 1: Power Off
9:8	RO	3h	**Power Indicator Control** If a Power Indicator is implemented, writes to this register set the Power Indicator to the written state. Reads of this field must reflect the value from the latest write, even if the corresponding hot-plug command is not executed yet at the VPP, unless software issues a write without waiting for the previous command to complete in which case the read value is undefined. 00: *Reserved.* 01: On 10: Blink (IOH drives 1.5 Hz square wave for Chassis mounted LEDs) 11: Off When this register is written, the event is signaled via the virtual pins of the IOH over a dedicated SMBus port. IOH does not generated the Power_Indicator_On/Off/Blink messages on PCI Express when this field is written to by software.
7:6	RO	3h	**Attention Indicator Control** If an Attention Indicator is implemented, writes to this register set the Attention Indicator to the written state. Reads of this field reflect the value from the latest write, even if the corresponding hot-plug command is not executed yet at the VPP, unless software issues a write without waiting for the previous command to complete in which case the read value is undefined. 00: *Reserved.* 01: On 10: Blink (The IOH drives 1.5 Hz square wave) 11: Off When this register is written, the event is signaled via the virtual pins of the IOH over a dedicated SMBus port. IOH does not generated the Attention_Indicator_On/Off/Blink messages on PCI Express when this field is written to by software.

Device: 20 Function: 0-2 Offset: 58h			
Bit	**Attr**	**Default**	**Description**
5	RO	0	Hot-plug Interrupt Enable When set to 1b, this bit enables generation of Hot-Plug MSI interrupt (and not wake event) on enabled Hot-Plug events, provided ACPI mode for hotplug is disabled. 0: disables interrupt generation on Hot-plug events 1: enables interrupt generation on Hot-plug events
4	RO	0	Command Completed Interrupt Enable This field enables the generation of Hot-plug interrupts (and not wake event) when a command is completed by the Hot-plug controller connected to the PCI Express port 0: disables hot-plug interrupts on a command completion by a hot-plug Controller 1: Enables hot-plug interrupts on a command completion by a hot-plug Controller
3	RO	0	Presence Detect Changed Enable This bit enables the generation of hot-plug interrupts or wake messages via a presence detect changed event. 0: disables generation of hot-plug interrupts or wake messages when a presence detect changed event happens. 1- Enables generation of hot-plug interrupts or wake messages when a presence detect changed event happens.
2	RO	0	MRL Sensor Changed Enable This bit enables the generation of hot-plug interrupts or wake messages via a MRL Sensor changed event. 0: disables generation of hot-plug interrupts or wake messages when an MRL Sensor changed event happens. 1: Enables generation of hot-plug interrupts or wake messages when an MRL Sensor changed event happens.
1	RO	0	**Power Fault Detected Enable** This bit enables the generation of hot-plug interrupts or wake messages via a power fault event. 0: disables generation of hot-plug interrupts or wake messages when a power fault event happens. 1: Enables generation of hot-plug interrupts or wake messages when a power fault event happens.
0	RO	0	**Attention Button Pressed Enable** This bit enables the generation of hot-plug interrupts or wake messages via an attention button pressed event. 0: disables generation of hot-plug interrupts or wake messages when the attention button is pressed. 1: Enables generation of hot-plug interrupts or wake messages when the attention button is pressed.

21.4.3.12 SLTSTS: PCI Express Slot Status Register

The PCI Express Slot Status register defines important status information for operations such as Hot-Plug and Power Management.

Device: 20
Function: 0-2
Offset: 5Ah

Bit	Attr	Default	Description
15:9	RV	0h	*Reserved.*
8	RO	0	**Data Link Layer State Changed** This bit is set (if it is not already set) when the state of the Data Link Layer Link Active bit in the Link Status register changes. Software must read Data Link Layer Active field to determine the link state before initiating configuration cycles to the hot plugged device.
7	RO	0	**Electromechanical Latch Status** When read this register returns the current state of the Electromechanical Interlock (the EMILS pin) which has the defined encodings as: 0b Electromechanical Interlock Disengaged 1b Electromechanical Interlock Engaged
6	RO	0	**Presence Detect State** For ports with slots (where the Slot Implemented bit of the PCI Express Capabilities Registers is 1b), this field is the logical OR of the Presence Detect status determined via an in-band mechanism and sideband Present Detect pins. Refer to how *PCI Express Base Specification, Revision 1.1 and post 1.1 Erratas and EC*'s* for how the inband presence detect mechanism works (certain states in the LTSSM constitute "card present" and others don't). 0: Card/Module/Cable slot empty or Cable Slot occupied but not powered 1: Card/module Present in slot (powered or unpowered) or cable present and powered on other end For ports with no slots, IOH hardwires this bit to 1b. ***Note***: OS could get confused when it sees an empty PCI Express root port that is, "no slots + no presence", since this is now disallowed in the spec. So bios must hide all unused root ports devices in IOH config space, via the DEVHIDE register in Intel QuickPath Interconnect CSR space.
5	RO	0	**MRL Sensor State** This bit reports the status of an MRL sensor if it is implemented. 0: MRL Closed 1: MRL Open
4	RO	0	**Command Completed** This bit is set by the IOH when the hot-plug command has completed and the hot-plug controller is ready to accept a subsequent command. It is subsequently cleared by software after the field has been read and processed. This bit provides no guarantee that the action corresponding to the command is complete.

Device: 20 Function: 0-2 Offset: 5Ah			
Bit	**Attr**	**Default**	**Description**
3	RO	0	Presence Detect Changed This bit is set by the IOH when a Presence Detect Changed event is detected. It is subsequently cleared by software after the field has been read and processed. On-board logic per slot must set the VPP signal corresponding this bit inactive if the FF/system does not support out-of-band presence detect.
2	RO	0	**MRL Sensor Changed** This bit is set by the IOH when an MRL Sensor Changed event is detected. It is subsequently cleared by software after the field has been read and processed. On-board logic per slot must set the VPP signal corresponding this bit inactive if the FF/system does not support MRL.
1	RO	0	**Power Fault Detected** This bit is set by the IOH when a power fault event is detected by the power controller. It is subsequently cleared by software after the field has been read and processed. On-board logic per slot must set the VPP signal corresponding this bit inactive if the FF/system does not support power fault detection.
0	RO	0	**Attention Button Pressed** This bit is set by the IOH when the attention button is pressed. It is subsequently cleared by software after the field has been read and processed. On-board logic per slot must set the VPP signal corresponding this bit inactive if the FF/system does not support attention button. IOH silently discards the Attention_Button_Pressed message if received from PCI Express link without updating this bit.

21.4.3.13 ROOTCON: PCI Express Root Control Register

The PCI Express Root Control register specifies parameters specific to the root complex port.

Device: 20 Function: 0-2 Offset: 5Ch			
Bit	**Attr**	**Default**	**Description**
15:5	RV	0h	*Reserved.*
4	RO	0	**CRS software visibility Enable** This bit, when set, enables the Root Port to return Configuration Request Retry Status (CRS) Completion Status to software.
3	RO	0	**PME Interrupt Enable** (Applies only to devices 0-8. This bit is a don't care for device 8) This field controls the generation of MSI interrupts for PME messages. 1: Enables interrupt generation upon receipt of a PME message 0: Disables interrupt generation for PME messages.

Device: 20
Function: 0-2

Offset: 5Ch

Bit	Attr	Default	Description
2	RO	0	**System Error on Fatal Error Enable** This field enables notifying the internal core error logic of occurrence of an uncorrectable fatal error at the port or below its hierarchy. The internal core error logic of IOH then decides if/how to escalate the error further (pins/ message etc). Refer to Section 16.2 for details of how/which system notification is generated for a PCI Express/ESI fatal error. 1: indicates that a internal core error logic notification should be generated if a fatal error (ERR_FATAL) is reported by any of the devices in the hierarchy associated with and including this port. 0: No internal core error logic notification should be generated on a fatal error (ERR_FATAL) reported by any of the devices in the hierarchy associated with and including this port. Note that generation of system notification on a PCI Express/ESI fatal error is orthogonal to generation of an MSI interrupt for the same error. Both a system error and MSI can be generated on a fatal error or software can chose one of the two. Refer to *PCI Express Base Specification, Revision 1.1 and post 1.1 Erratas and EC*'s* for details of how this bit is used in conjunction with other error control bits to generate core logic notification of error events in a PCI Express/ESI port.
1	RO	0	System Error on Non-Fatal Error Enable This field enables notifying the internal core error logic of occurrence of an uncorrectable non-fatal error at the port or below its hierarchy. The internal core error logic of IOH then decides if/how to escalate the error further (pins/ message etc). Refer to Section 16 for details of how/which system notification is generated for a PCI Express/ESI non-fatal error. 1: indicates that a internal core error logic notification should be generated if a non-fatal error (ERR_NONFATAL) is reported by any of the devices in the hierarchy associated with and including this port. 0: No internal core error logic notification should be generated on a non-fatal error (ERR_NONFATAL) reported by any of the devices in the hierarchy associated with and including this port. Note that generation of system notification on a PCI Express/ESI non-fatal error is orthogonal to generation of an MSI interrupt for the same error. Both a system error and MSI can be generated on a non-fatal error or software can chose one of the two. Refer to *PCI Express Base Specification, Revision 1.1 and post 1.1 Erratas and EC*'s* for details of how this bit is used in conjunction with other error control bits to generate core logic notification of error events in a PCI Express/ESI port.

Device: 20 Function: 0-2 Offset: 5Ch			
Bit	**Attr**	**Default**	**Description**
0	RO	0	**System Error on Correctable Error Enable** This field controls notifying the internal core error logic of the occurrence of a correctable error in the device or below its hierarchy. The internal core error logic of IOH then decides if/how to escalate the error further (pins/message etc). Refer to Section 16.2 for details of how/which system notification is generated for a PCI Express correctable error. 1: indicates that an internal core error logic notification should be generated if a correctable error (ERR_COR) is reported by any of the devices in the hierarchy associated with and including this port. 0: No internal core error logic notification should be generated on a correctable error (ERR_COR) reported by any of the devices in the hierarchy associated with and including this port. Note that generation of system notification on a PCI Express correctable error is orthogonal to generation of an MSI interrupt for the same error. Both a system error and MSI can be generated on a correctable error or software can chose one of the two. Refer to *PCI Express Base Specification, Revision 1.1 and post 1.1 Erratas and EC*'s* for details of how this bit is used in conjunction with other error control bits to generate core logic notification of error events in a PCI Express/ESI port.

21.4.3.14 ROOTCAP: PCI Express Root Capabilities Register

The PCI Express Root Status register specifies parameters specific to the root complex port.

Device: 20 Function: 0-2 Offset: 5Eh			
Bit	**Attr**	**Default**	**Description**
15:1	RV	0h	*Reserved.*
0	RO	1	**CRS Software Visibility** This bit, when set, indicates that the Root Port is capable of returning Configuration Request Retry Status (CRS) Completion Status to software. IOH supports this capability.

21.4.3.15 ROOTSTS: PCI Express Root Status Register

The PCI Express Root Status register specifies parameters specific to the root complex port.

Device: 20
Function: 0-2

Offset: 60h

Bit	Attr	Default	Description
31:18	RV	0h	*Reserved.*
17	RO	0	**PME Pending** This field indicates that another PME is pending when the PME Status bit is set. When the PME Status bit is cleared by software; the pending PME is delivered by hardware by setting the PME Status bit again and updating the Requestor ID appropriately. The PME pending bit is cleared by hardware if no more PMEs are pending.
16	RO	0	**PME Status** This field indicates a PM_PME message (either from the link or internally from within that root port) was received at the port. 1: PME was asserted by a requester as indicated by the PMEREQID field This bit is cleared by software by writing a '1'. Note that the root port itself could be the source of a PME event when a hotplug event is observed when the port is in D3hot state.
15:0	RO	0	**PME Requester ID** This field indicates the PCI requester ID of the last PME requestor. If the root port itself was the source of the (virtual) PME message, then a RequesterID of IOHBUSNO:DevNo:0 is logged in this field.

21.4.3.16 DEVCAP2: PCI Express Device Capabilities 2 Register

The PCI Express Device Capabilities register identifies device specific information for the device.

Device: 20
Function: 0-2

Offset: 64h

Bit	Attr	Default	Description
31:6	RV	0	**Reserved**
5	RO	0	**Alternative RID Interpretation (ARI) Capable** This bit is hardwired to 0b indicating no support for this capability.
4	RO	0	**Completion Timeout Disable Support** IOH does not support disabling completion timeout
3:0	RO	0000	**Completion Timeout Values Supported** This field indicates device support for the optional Completion Timeout programmability mechanism. 0000b: Completions Timeout programming not supported.

21.4.3.17 DEVCON2: PCI Express Device Control 2 Register

The PCI Express Device Control register controls PCI Express specific capabilities parameters associated with the device.

Device: 20
Function: 0-2

Offset: 68h

Bit	Attr	Default	Description
15:6	RV	0	Reserved
5	RO	0	**Alternative RID Interpretation (ARI) Enable** When set to 1b, ARI is enabled in Root Port.
4	RO	0	**Completion Timeout Disable** When set to 1b, this bit disables the Completion Timeout Mechanism for all NP tx that IOH issues on the PCIe/DMI link and in the case of CBDMA, for all NP tx that DMA issues upstream. When set to 0b, completion timeout is enabled. Software can change this field while there is active traffic in the root port.
3:0	RO	0000b	Completion Timeout Value on NP Tx that IOH Issues on PCIe/DMI: In devices that support Completion Timeout Programmability, this field allows system software to modify the Completion Timeout range. The following encodings and corresponding timeout ranges are defined: 0000b: 2ms 0001b: Reserved (IOH aliases to 0000b) 0010b: Reserved (IOH aliases to 0000b) 0101b: 4ms 0110b: 10ms 1001b: 40ms 1010b: 210ms 1101b: 800ms 1110b: 2s to 6.5s Note: These values can deviate +/-10% When the OS selects the 2s - 6.5s range, CTOCTRL further controls the timeout value within that range. For all other ranges selected by OS, the timeout value within that range is fixed in the IOH hardware. Software can change this field while there is active traffic in the root port. This value is also used to control PME_TO_ACK timeout. This field sets the timeout value for recieving the PME_TO_ACK message after a PME_TURN_OFF message has been transmitted. The PME_TO_ACK timeout has meaning only if Bit 6 of MISCCTRLSTS is set to 1b.

21.4.3.18 DEVSTS2: PCI Express Device Status 2 Register

The PCI Express Device Status register provides information about PCI Express device specific parameters associated with the device.

Device: 20
Function: 0-2

Offset: 6Ah

Bit	Attr	Default	Description
15:0	RV	0h	*Reserved.*

21.4.3.19 LNKCAP2: PCI Express Link Capabilities 2 Register

The Link Capabilities register identifies the PCI Express specific link capabilities.

Device: 20
Function: 0-2

Offset: 6Ch

Bit	Attr	Default	Description
31:0	RV	0	*Reserved*

21.4.3.20 LNKCON2: PCI Express Link Control 2 Register

The PCI Express Link Control register controls the PCI Express Link specific parameters.

Device: 20
Function: 0-2

Offset: 70h

Bit	Attr	Default	Description
15:0	RV	0	*Reserved.*

21.4.3.21 LNKSTS2: PCI Express Link Status 2 Register

The PCI Express Link Status register provides information on the status of the PCI Express Link such as negotiated width, training, and so on.

Device: 20
Function: 0-2

Offset: 72h

Bit	Attr	Default	Description
15:0	RV	0	*Reserved.*

21.4.3.22 SLTCAP2: PCI Express Slot Capabilities 2 Register

The Slot Capabilities register identifies the PCI Express specific slot capabilities. These registers must be ignored by software on the ESI links.

Device: 20
Function: 0-2

Offset: 74h

Bit	Attr	Default	Description
31:0	RV	0	*Reserved.*

21.4.3.23 SLTCON2: PCI Express Slot Control 2 Register

The Slot Control register identifies the PCI Express specific slot control parameters for operations such as Hot-plug and Power Management.

Device: 20
Function: 0-2

Offset: 78h

Bit	Attr	Default	Description
15:0	RV	0	*Reserved.*

21.4.3.24 SLTSTS2: PCI Express Slot Status 2 Register

The PCI Express Slot Status register defines important status information for operations such as Hot-plug and Power Management.

Device: 20
Function: 0-2

Offset: 7Ah

Bit	Attr	Default	Description
15:0	RV	0	*Reserved.*

21.5 IOxAPIC Controller

Table 21-4. IOH Device 19 I/OxAPIC Configuration Map - Offset 0x00-0xFF

DID		VID		00h			RDINDEX	80h
PCISTS		PCICMD		04h				84h
CCR			RID	08h				88h
	HDR		CLS	0Ch				8Ch
MBAR				10h	RDWINDOW			90h
				14h				94h
				18h				98h
				1Ch				9Ch
				20h	IOAPICTETPC			A0h
				24h				A4h
				28h				A8h
SID		SVID		2Ch				ACh
				30h				B0h
			CAPPTR	34h				B4h
				38h				B8h
				3Ch				BCh
		ABAR		40h				C0h
				44h				C4h
				48h				C8h
				4Ch				CCh
				50h				D0h
				54h				D4h
				58h				D8h
				5Ch				DCh
				60h				E0h
				64h				E4h
				68h				E8h
PMCAP				6Ch				ECh
PMCSR				70h				F0h
				74h				F4h
				78h				F8h
				7Ch				FCh

21.5.1 PCICMD: PCI Command Register (Dev #19)

This register defines the PCI 3.0 compatible command register values applicable to PCI Express space.

Device: 19 Function: 0 Offset: 04h			
Bit	**Attr**	**Default**	**Description**
15:11	RV	0	Reserved (by PCI SIG)
10	RO	0	**Interrupt Disable** Controls the ability of DMA to generate legacy INTx interrupt (when legacy INTx mode is enabled). This bit does not affect the ability of the Express port to route interrupt messages received at the PCI Express port. 1: Legacy Interrupt message generation is disabled 0: Legacy Interrupt message generation is enabled If this bit transitions from 1->0 when a previous Assert_INTx message was sent but no corresponding Deassert_INTx message sent yet, a Deassert_INTx message is sent on this bit transition.
9	RO	0	**Fast Back-to-Back Enable** Not applicable to PCI Express and is hardwired to 0
8	RO	0	**SERR Enable** For PCI Express/ESI ports, this field enables notifying the internal core error logic of occurrence of an uncorrectable error (fatal or non-fatal) at the port. The internal core error logic of IOH then decides if/how to escalate the error further (pins/message etc.). This bit also controls the propagation of PCI Express ERR_FATAL and ERR_NONFATAL messages received from the port to the internal IOH core error logic. 1: Fatal and Non-fatal error generation and Fatal and Non-fatal error message forwarding is enabled 0: Fatal and Non-fatal error generation and Fatal and Non-fatal error message forwarding is disabled Refer to *PCI Express Base Specification, Revision 1.1 and post 1.1 Erratas and EC*'s* for details of how this bit is used in conjunction with other control bits in the Root Control register for forwarding errors detected on the PCI Express interface to the system core error logic. This bit has no impact on error reporting from the other devices - DMA, I/OxAPIC, Perf Mon and PCI Express DF* registers.
7	RO	0	**IDSEL Stepping/Wait Cycle Control** Not applicable to internal IOH devices. Hardwired to 0.
6	RO	0	**Parity Error Response** For PCI Express/ESI ports, IOH ignores this bit and always does ECC/parity checking and signaling for data/address of transactions both to and from IOH. This bit though affects the setting of bit 8 in the PCISTS (see bit 8 in Section 21.4.2.4) register. This bit has no impact on error reporting from the other devices - DMA, I/OxAPIC, Perf Mon and PCI Express DF* registers.
5	RO	0	**VGA palette snoop Enable** Not applicable to internal IOH devices. Hardwired to 0.
4	RO	0	**Memory Write and Invalidate Enable** Not applicable to internal IOH devices. Hardwired to 0.
3	RO	0	**Special Cycle Enable** Not applicable to PCI Express. Hardwired to 0.

Device: 19 Function: 0 Offset: 04h			
Bit	**Attr**	**Default**	**Description**
2	RW	0	**Bus Master Enable** Controls the ability of the PCI Express/ESI port in generating/forwarding memory (including MSI writes) or I/O transactions (and not messages) or configuration transactions from the secondary side to the primary side. For DMA and I/OxAPIC, this bit enables them to generate memory write/MSI and memory read transactions (read applies only to DMA). 1: Enables the PCI Express/ESI port, I/OxAPIC or DMA to generate/forward memory, config or I/O read/write requests. 0: The Bus Master is disabled. When this bit is 0, IOH root ports will treat upstream PCI Express memory writes/reads, IO writes/reads, and configuration reads and writes as unsupported requests (and follow the rules for handling unsupported requests). This behavior is also true towards transactions that are already pending in the IOH root port's internal queues when the BME bit is turned off. I/OxAPIC and DMA cannot generate any memory transactions when this bit is 0.
1	RW	0	**Memory Space Enable** 1: Enables a PCI Express/ESI port's memory range registers, internal I/OxAPIC's MBAR register (ABAR range decode is not enabled by this bit) or CB DMA device's memory BARs to be decoded as valid target addresses for transactions from primary side. 0: Disables a PCI Express/ESI port's memory range registers (excluding the IOxAPIC range registers), internal I/OxAPIC's MBAR register (but not ABAR register) or DMA device's memory BARs to be decoded as valid target addresses for transactions from primary side. Note that if a PCI Express/ESI port's MSE bit is clear, that port can still be target of any memory transaction if subtractive decoding is enabled on that port.
0	RO	0	**IO Space Enable** Applies only to PCI Express/ESI ports 1: Enables the I/O address range, defined in the IOBASE and IOLIM registers of the PCI-to-PCI bridge header, for target decode from primary side 0: Disables the I/O address range, defined in the IOBASE and IOLIM registers of the PCI-to-PCI bridge header, for target decode from primary side Note that if a PCI Express/ESI port's IOSE bit is clear, that port can still be target of an I/O transaction if subtractive decoding is enabled on that port.

21.5.2 PCISTS: PCI Status Register (Dev #19)

The PCI Status register is a 16-bit status register that reports the occurrence of various events associated with the primary side of the "virtual" PCI-PCI bridge embedded in PCI Express ports and also primary side of the other devices on the internal IOH bus.

Register: PCISTS
Device: 19
Function: 0
Offset: 06h

Bit	Attr	Default	Description
15	RO	0	**Detected Parity Error** This bit is set by a device when it receives a packet on the primary side with an uncorrectable data error (i.e. a packet with poison bit set or an uncorrectable data ECC error was detected at the XP-DP interface when ECC checking is done) or an uncorrectable address/control parity error. The setting of this bit is regardless of the Parity Error Response bit (PERRE) in the PCICMD register. This bit is RO for these devices.
14	RO	0	**Signaled System Error** 1: The device reported fatal/non-fatal (and not correctable) errors it detected on its PCI Express interface. Software clears this bit by writing a '1' to it. For Express ports, this bit is also set (when SERR enable bit is set) when a FATAL/NON-FATAL message is forwarded from the Express link. Note that IOH internal 'core' errors (like parity error in the internal queues) are not reported via this bit. 0: The device did not report a fatal/non-fatal error
13	RO	0	**Received Master Abort** This bit is set when a device experiences a master abort condition on a transaction it mastered on the primary interface (IOH internal bus). Note that certain errors might be detected right at the PCI Express interface and those transactions might not 'propagate' to the primary interface before the error is detected (e.g. accesses to memory above TOCM in cases where the PCIe interface logic itself might have visibility into TOCM). Such errors do not cause this bit to be set, and are reported via the PCI Express interface error bits (secondary status register). Conditions that cause bit 13 to be set, include: • Device receives a completion on the primary interface (internal bus of IOH) with Unsupported Request or master abort completion Status. This includes UR status received on the primary side of a PCI Express port on peer-to-peer completions also. • Device accesses to holes in the main memory address region that are detected by the Intel QuickPath Interconnect source address decoder. • Other master abort conditions detected on the IOH internal bus.
12	RO	0	**Received Target Abort** This bit is set when a device experiences a completer abort condition on a transaction it mastered on the primary interface (IOH internal bus). Note that certain errors might be detected right at the PCI Express interface and those transactions might not 'propagate' to the primary interface before the error is detected (e.g. accesses to memory above VTCSRBASE). Such errors do not cause this bit to be set, and are reported via the PCI Express interface error bits (secondary status register). Conditions that cause bit 12 to be set, include: • Device receives a completion on the primary interface (internal bus of IOH) with completer abort completion Status. This includes CA status received on the primary side of a PCI Express port on peer-to-peer completions also. • Accesses to Intel QuickPath Interconnect that return a failed completion status • Other master abort conditions detected on the IOH internal bus.
11	RWC	0	**Signaled Target Abort** This bit is set when a device signals a completer abort completion status on the primary side (internal bus of IOH). This condition includes a PCI Express port forwarding a completer abort status received on a completion from the secondary side and passed to the primary side on a peer2peer completion.

Register: PCISTS Device: 19 Function: 0 Offset: 06h			
Bit	**Attr**	**Default**	**Description**
10:9	RO	0h	**DEVSEL# Timing** Not applicable to PCI Express. Hardwired to 0.
8	RO	0	**Master Data Parity Error** This bit is set by a device if the Parity Error Response bit in the PCI Command register is set and it receives a completion with poisoned data from the primary side or if it forwards a packet with data (including MSI writes) to the primary side with poison.
7	RO	0	**Fast Back-to-Back** Not applicable to PCI Express. Hardwired to 0.
6	RV	0	*Reserved*
5	RO	0	**66MHz capable** Not applicable to PCI Express. Hardwired to 0.
4	RO	1h	Capabilities List This bit indicates the presence of a capabilities list structure
3	RO	0	INTx Status Indicates that a legacy INTx interrupt condition is pending internally in the CB DMA device. This bit has meaning only in the legacy interrupt mode. This bit is always 0 when MSI-X (see) has been selected for DMA interrupts. Note that the setting of the INTx status bit is independent of the INTx enable bit in the PCI command register i.e. this bit is set anytime the DMA engine is setup by its driver to generate any interrupt and the condition that triggers the interrupt has occurred, regardless of whether a legacy interrupt message was signaled to the ICH or not. Note that the INTx enable bit has to be set in the PCICMD register for DMA to generate a INTx message to the ICH. This bit is not applicable to PCI Express and ESI ports and this bit does not get set for interrupts forwarded from a PCI Express port to the ICH from downstream devices. This bit also does not apply to Perf Mon, I/OxAPIC and DF* register devices.
2:0	RV	0h	Reserved

21.5.3 MBAR: IOxAPIC Base Address Register

Register: MBAR Device: 19 Function: 0 Offset: 10h			
Bit	**Attr**	**Default**	**Description**
63:32	RV	0h	*Reserved*
31:12	RW	0h	BAR: this marks the 4KB aligned 32-bit base address for memory-mapped registers of I/OxAPIC
11:4	RV	0h	Reserved
3	RO	0	Prefetchable The IOxAPIC registers are not prefetchable.
2:1	RO	00	Type The IOAPIC registers can only be placed below 4G system address space.
0	RO	0	Memory Space This Base Address Register indicates memory space.

21.5.4 ABAR: I/OxAPIC Alternate BAR

Register: ABAR
Device: 19
Function: 0
Offset: 40h

Bit	Attr	Default	Description
15	RW	0	**ABAR Enable:** When set, the range FECX_YZ00 to FECX_YZFF is enabled as an alternate access method to the IOxAPIC registers and these addresses are claimed by the IOH's internal I/OxAPIC regardless of the setting the MSE bit in the I/OxAPIC config space. Bits 'XYZ' are defined below.
14:12	RV	0	Reserved
11:8	RW	0	**XBAD: Base Address [19:16]T**hese bits determine the high order bits of the I/O APIC address map. When a memory address is recognized by the IOH which matches FECX_YZ00-to-FECX_YZFF, the IOH will respond to the cycle and access the internal I/O APIC.
7:4	RW	0h	**YBAD: Base Address [15:12]** These bits determine the low order bits of the I/O APIC address map. When a memory address is recognized by the IOH which matches FECX_YZ00-to-FECX_YZFF, the IOH will respond to the cycle and access the internal I/O APIC.
3:0	RW	0h	**ZBAD: Base Address [11:8]** These bits determine the low order bits of the I/O APIC address map. When a memory address is recognized by the IOH which matches FECX_YZ00-to-FECX_YZFF, the IOH will respond to the cycle and access the internal I/O APIC.

21.5.5 PMCAP: Power Management Capabilities Register

The PM Capabilities Register defines the capability ID, next pointer and other power management related support. The following PM registers /capabilities are added for software compliance.

Register: PMCAP
Device: 19
Function: 0
Offset: 6Ch

Bit	Attr	Default	Description
31:27	RO	11001b	**PME Support** Bits 31, 30 and 27 must be set to '1' for PCI-PCI bridge structures representing ports on root complexes.
26	RO	0	**D2 Support** IOH does not support power management state D2.
25	RO	0	**D1 Support** IOH does not support power management state D1.
24:22	RO	0h	AUX Current
21	RO	0	Device Specific Initialization
20	RV	0	*Reserved*

Register: PMCAP Device: 19 Function: 0 Offset: 6Ch			
Bit	**Attr**	**Default**	**Description**
19	RO	0	**PME Clock** This field is hardwired to 0h as it does not apply to PCI Express.
18:16	RWO	011	**Version** This field is set to 3h (PM 1.2 compliant) as version number. Bit is RWO to make the version 2h incase legacy OS'es have any issues.
15:8	RO	00h	**Next Capability Pointer** This is the last capability in the chain and hence set to 0.
7:0	RO	01h	**Capability ID** Provides the PM capability ID assigned by PCI-SIG.

21.5.6 PMCSR: Power Management Control and Status Register

This register provides status and control information for PM events in the PCI Express port of the IOH.

Register: PMCSR Device: 19 Function: 0 Offset: 70h			
Bit	**Attr**	**Default**	**Description**
31:24	RO	00h	**Data** Not relevant for IOH
23	RO	0h	**Bus Power/Clock Control Enable** This field is hardwired to 0h as it does not apply to PCI Express.
22	RO	0h	**B2/B3 Support** This field is hardwired to 0h as it does not apply to PCI Express.
21:16	RV	0h	*Reserved*
15	RO	0h	**PME Status** Applies only to root ports This PME Status is a sticky bit. This bit is set, independent of the PMEEN bit defined below, on an enabled PCI Express hotplug event provided the root port was in D3hot state. Software clears this bit by writing a '1' when it has been completed. Refer to *PCI Express Base Specification, Revision 1.1 and post 1.1 Erratas and EC*'s* for further details on wake event generation at a root port.
14:13	RO	0h	**Data Scale** Not relevant for IOH
12:9	RO	0h	**Data Select** Not relevant for IOH
8	RO	0h	**PME Enable** Applies only to root ports. This field is a sticky bit and when set, enables PMEs generated internally on a PCI Express hotplug event to set the appropriate bits in the ROOTSTS register (which can then trigger an MSI or cause a _PMEGPE event).

Register: PMCSR Device: 19 Function: 0 Offset: 70h			
Bit	**Attr**	**Default**	**Description**
7:4	RV	0h	*Reserved*
3	RO	0	**Indicates IOH does not reset its registers when transitioning from D3hot to D0.**
2	RV	0h	*Reserved2*
1:0	RW	0h	**Power State** This 2-bit field is used to determine the current power state of the function and to set a new power state as well. 00: D0 01: D1 (not supported by IOH) 10: D2 (not supported by IOH) 11: D3_hot If Software tries to write 01 or 10 to this field, the power state does not change from the existing power state (which is either D0 or D3hot) and nor do these bits1:0 change value. All devices will a) respond to only Type 0 configuration transactions targeted at the device's configuration space, when in D3hot state b) root port will not forward Type 1 or Type 0 transactions to the downstream PCIe link c) will not respond to memory/IO transactions (i.e. D3hot state is equivalent to MSE/IOSE bits being clear), with one exception noted below, as target d) will not generate any memory/IO/configuration transactions as initiator on the primary bus. Exception to c) is that root ports will continue to decode and forward memory transactions that target the IOAPIC address range, even when the root port is in D3hot state. Inbound memory/IO/configuration transactions that happen when the device is in D3hot state are aborted and root ports return a UR response on PCIe. Messages/completions will still pass through in either direction without being aborted.

21.5.7 RDINDEX: Alternate Index to read Indirect I/OxAPIC Registers

Register: RDINDEX Device: 19 Function: 0 Offset: 80h			
Bit	**Attr**	**Default**	**Description**
7:0	RW	0h	**Index**: When bmc/jtag wants to read the indirect RTE registers of I/OxAPIC, this register is used to point to the index of the indirect register, as defined in the I/OxAPIC indirect memory space. Software writes to this register and then does a read of the RDWINDOW register to read the contents at that index. Note h/w does not preclude software from accessing this register over Intel QPI but that is not what this register is defined for.

21.5.8 RDWINDOW: Alternate Window to read Indirect I/OxAPIC Registers

Register: RDWINDOW Device: 19 Function: 0 Offset: 90h			
Bit	**Attr**	**Default**	**Description**
31:0	RO	0h	**Window:** When SMBUS/JTAG reads this register, the data contained in the indirect register pointed to by the RDINDEX register is returned on the read.

21.5.9 IOAPICTETPC: IOxAPIC Table Entry Target Programmable Control

Register: IOAPICTETPC Device: 19 Function: 0 Offset: A0h			
Bit	**Attr**	**Default**	**Description**
31:13	RV	00000h	**Reserved**
12	RW	1h	**SRC17INTA:** 0 – src/int is connected to IOAPIC table entry 5 1 – src/int is connected to IOAPIC table entry 21
11	RW	1h	**SRC16INTB:** 0 – src/int is connected to IOAPIC table entry 3 1 – src/int is connected to IOAPIC table entry 22
10	RW	1h	**SRC13INTA:** 0 – src/int is connected to IOAPIC table entry 2 1 – src/int is connected to IOAPIC table entry 21
9	RW	1h	**SRC14INTD:** 0 – src/int is connected to IOAPIC table entry 1 1 – src/int is connected to IOAPIC table entry 22
8	RW	1h	**SRC10INTD:** 0 – src/int is connected to IOAPIC table entry 16 1 – src/int is connected to IOAPIC table entry 21
7	RW	1h	**SRC10INTC:** 0 – src/int is connected to IOAPIC table entry 18 1 – src/int is connected to IOAPIC table entry 22
6	RW	0h	**SRC10INTB:** 0 – src/int is connected to IOAPIC table entry 7 1 – src/int is connected to IOAPIC table entry 17
5	RW	1h	**SRC9INTC:** 0 – src/int is connected to IOAPIC table entry 16 1 – src/int is connected to IOAPIC table entry 23
4	RW	0h	**SRC6INTB:** 0 – src/int is connected to IOAPIC table entry 17 1 – src/int is connected to IOAPIC table entry 23

Register: IOAPICTETPC Device: 19 Function: 0 Offset: A0h			
Bit	**Attr**	**Default**	**Description**
3	RW	1h	**SRC5INTD:** 0 – src/int is connected to IOAPIC table entry 18 1 – src/int is connected to IOAPIC table entry 23
2	RW	0h	**SRC3INTD:** 0 – src/int is connected to IOAPIC table entry 5 1 – src/int is connected to IOAPIC table entry 11
1	RW	0h	**SRC3INTC:** 0 – src/int is connected to IOAPIC table entry 3 1 – src/int is connected to IOAPIC table entry 10
0	RW	0h	**SRC3INTB:** 0 – src/int is connected to IOAPIC table entry 1 1 – src/int is connected to IOAPIC table entry 12

21.5.10 MBAR: IOxAPIC Base Address Register

Register: MBAR Device: 19 Function: 0 Offset: 10h			
Bit	**Attr**	**Default**	**Description**
63:32	RV	0h	Reserved
31:12	RW	0h	**BAR:** This marks the 4KB aligned 32-bit base address for memory-mapped registers of I/OxAPIC
11:4	RV	0h	Reserved
3	RO	0	**Prefetchable** The IOxAPIC registers are not prefetchable.
2:1	RO	00	**Type** The IOAPIC registers can only be placed below 4G system address space.
0	RO	0	**Memory Space** This Base Address Register indicates memory space.

21.5.11 ABAR: I/OxAPIC Alternate BAR

Register: ABAR
Device: 19
Function: 0
Offset: 40h

Bit	Attr	Default	Description
15	RW	0	**ABAR Enable:** When set, the range FECX_YZ00 to FECX_YZFF is enabled as an alternate access method to the IOxAPIC registers and these addresses are claimed by the IOH's internal I/OxAPIC regardless of the setting the MSE bit in the I/OxAPIC config space. Bits 'XYZ' are defined below.
14:12	RV	0h	Reserved
11:8	RW	0h	**Base Address [19:16] (XBAD):** These bits determine the high order bits of the I/O APIC address map. When a memory address is recognized by the IOH which matches FECX_YZ00-to-FECX_YZFF, the IOH will respond to the cycle and access the internal I/O APIC.
7:4	RW	0h	**Base Address [15:12] (YBAD):** These bits determine the low order bits of the I/O APIC address map. When a memory address is recognized by the IOH which matches FECX_YZ00-to-FECX_YZFF, the IOH will respond to the cycle and access the internal I/O APIC.
3:0	RW	0h	**Base Address [11:8] (ZBAD):** These bits determine the low order bits of the I/O APIC address map. When a memory address is recognized by the IOH which matches FECX_YZ00-to-FECX_YZFF, the IOH will respond to the cycle and access the internal I/O APIC.

21.5.12 PMCAP: Power Management Capabilities Register

The PM Capabilities Register defines the capability ID, next pointer and other power management related support. The following PM registers /capabilities are added for software compliance.

Register: PMCAP
Device: 19
Function: 0
Offset: 6Ch

Bit	Attr	Default	Description
31:27	RO	11001b	**PME Support** Bits 31, 30 and 27 must be set to '1' for PCI-PCI bridge structures representing ports on root complexes.
26	RO	0	**D2 Support** IOH does not support power management state D2.
25	RO	0	**D1 Support** IOH does not support power management state D1.
24:22	RO	0h	**AUX Current**
21	RO	0	**Device Specific Initialization**
20	RV	0	*Reserved.*

Register: PMCAP Device: 19 Function: 0 Offset: 6Ch			
Bit	**Attr**	**Default**	**Description**
19	RO	0	**PME Clock** This field is hardwired to 0h as it does not apply to PCI Express.
18:16	RWO	011	**Version** This field is set to 3h (PM 1.2 compliant) as version number. Bit is RWO to make the version 2h incase legacy OS'es have any issues.
15:8	RO	00h	**Next Capability Pointer** This is the last capability in the chain and hence set to 0.
7:0	RO	01h	**Capability ID** Provides the PM capability ID assigned by PCI-SIG.

21.5.13 PMCSR: Power Management Control and Status Register

This register provides status and control information for PM events in the PCI Express port of the IOH.

Register: PMCSR Device: 19 Function: 0 Offset: 70h			
Bit	**Attr**	**Default**	**Description**
31:24	RO	00h	**Data** Not relevant for IOH
23	RO	0h	**Bus Power/Clock Control Enable** This field is hardwired to 0h as it does not apply to PCI Express.
22	RO	0h	**B2/B3 Support** This field is hardwired to 0h as it does not apply to PCI Express.
21:16	RV	0h	*Reserved.*
15	RO	0h	**PME Status** Applies only to root ports This PME Status is a sticky bit. This bit is set, independent of the PMEEN bit defined below, on an enabled PCI Express hotplug event provided the root port was in D3hot state. Software clears this bit by writing a '1' when it has been completed. Refer to *PCI Express Base Specification, Revision 1.1 and post 1.1 Erratas and EC*'s* for further details on wake event generation at a root port.
14:13	RO	0h	**Data Scale** Not relevant for IOH
12:9	RO	0h	**Data Select** Not relevant for IOH
8	RO	0h	**PME Enable** Applies only to root ports. This field is a sticky bit and when set, enables PMEs generated internally on a PCI Express hotplug event to set the appropriate bits in the ROOTSTS register (which can then trigger an MSI or cause a _PMEGPE event).

Register: PMCSR Device: 19 Function: 0 Offset: 70h			
Bit	**Attr**	**Default**	**Description**
7:4	RV	0h	*Reserved.*
3	RO	0	**Indicates IOH does not reset its registers when transitioning from D3hot to D0.**
2	RV	0h	*Reserved.*
1:0	RW	0h	**Power State** This 2-bit field is used to determine the current power state of the function and to set a new power state as well. 00: D0 01: D1 (not supported by IOH) 10: D2 (not supported by IOH) 11: D3_hot If Software tries to write 01 or 10 to this field, the power state does not change from the existing power state (which is either D0 or D3hot) and nor do these bits1:0 change value. All devices will a) respond to only Type 0 configuration transactions targeted at the device's configuration space, when in D3hot state b) root port will not forward Type 1 or Type 0 transactions to the downstream PCIe link c) will not respond to memory/IO transactions (that is, D3hot state is equivalent to MSE/IOSE bits being clear), with one exception noted below, as target d) will not generate any memory/IO/configuration transactions as initiator on the primary bus. Exception to c) is that root ports will continue to decode and forward memory transactions that target the IOAPIC address range, even when the root port is in D3hot state. Inbound memory/IO/configuration transactions that happen when the device is in D3hot state are aborted and root ports return a UR response on PCIe. Messages/completions will still pass through in either direction without being aborted.

21.5.14 RDINDEX: Alternate Index to read Indirect I/OxAPIC Registers

Register: RDINDEX Device: 19 Function: 0 Offset: 80h			
Bit	**Attr**	**Default**	**Description**
7:0	RW	0h	**Index:** When bmc/jtag wants to read the indirect RTE registers of I/OxAPIC, this register is used to point to the index of the indirect register, as defined in the I/OxAPIC indirect memory space. Software writes to this register and then does a read of the RDWINDOW register to read the contents at that index. Note hardware does not preclude software from accessing this register over Intel QuickPath Interconnect but that is not what this register is defined for.

21.5.15 RDWINDOW: Alternate Window to read Indirect I/OxAPIC Registers

Register: RDWINDOW Device: 19 Function: 0 Offset: 90h			
Bit	**Attr**	**Default**	**Description**
31:0	RO	0h	**Window:** When SMBUS/JTAG reads this register, the data contained in the indirect register pointed to by the RDINDEX register is returned on the read.

21.5.16 IOAPICTETPC: IOxAPIC Table Entry Target Programmable Control

Register: IOAPICTETPC Device: 19 Function: 0 Offset: A0h			
Bit	**Attr**	**Default**	**Description**
31:13	RV	00000h	Reserved
12	RW	1h	**SRC17INTA:** 0 – src/int is connected to IOAPIC table entry 5 1 – src/int is connected to IOAPIC table entry 21
11	RW	1h	**SRC16INTB:** 0 – src/int is connected to IOAPIC table entry 3 1 – src/int is connected to IOAPIC table entry 22
10	RW	1h	**SRC13INTA:** 0 – src/int is connected to IOAPIC table entry 2 1 – src/int is connected to IOAPIC table entry 21
9	RW	1h	**SRC14INTA:** 0 – src/int is connected to IOAPIC table entry 1 1 – src/int is connected to IOAPIC table entry 22
8	RW	1h	**SRC10INTD:** 0 – src/int is connected to IOAPIC table entry 16 1 – src/int is connected to IOAPIC table entry 21
7	RW	1h	**SRC10INTC:** 0 – src/int is connected to IOAPIC table entry 18 1 – src/int is connected to IOAPIC table entry 22
6	RW	0h	**SRC10INTB:** 0 – src/int is connected to IOAPIC table entry 7 1 – src/int is connected to IOAPIC table entry 17
5	RW	1h	**SRC9INTC:** 0 – src/int is connected to IOAPIC table entry 16 1 – src/int is connected to IOAPIC table entry 23
4	RW	0h	**SRC6INTB:** 0 – src/int is connected to IOAPIC table entry 17 1 – src/int is connected to IOAPIC table entry 23

Register: IOAPICTETPC Device: 19 Function: 0 Offset: A0h			
Bit	**Attr**	**Default**	**Description**
3	RW	1h	**SRC5INTD:** 0 – src/int is connected to IOAPIC table entry 18 1 – src/int is connected to IOAPIC table entry 23
2	RW	0h	**SRC3INTD:** 0 – src/int is connected to IOAPIC table entry 5 1 – src/int is connected to IOAPIC table entry 11
1	RW	0h	**SRC3INTC:** 0 – src/int is connected to IOAPIC table entry 3 1 – src/int is connected to IOAPIC table entry 10
0	RW	0h	**SRC3INTB:** 0 – src/int is connected to IOAPIC table entry 1 1 – src/int is connected to IOAPIC table entry 12

21.5.17 I/OxAPIC Memory Mapped Registers

I/OxAPIC has a direct memory mapped space. An index/data register pair is located within the directed memory mapped region and is used to access the redirection table entries. provides the direct memory mapped registers of the I/OxAPIC. The offsets shown in the table are from the base address in either ABAR or MBAR or both. Accesses to addresses beyond 40h return all 0s.

Note that only addresses up to offset 0xFF can be accessed via the ABAR register whereas offsets up to 0xFFF can be accessed via MBAR. Only aligned DWORD reads and write are allowed towards the I/OxAPIC memory space. Any other accesses will result in an error.

Table 21-5. I/OxAPIC Direct Memory Mapped Registers

Register	Byte Offset
Index	00h
	04h
	08h
	0Ch
Window	10h
	14h
	18h
	1Ch
PAR	20h
	24h
	28h
	2Ch
	30h
	34h
	38h
	3Ch
EOI	40h
	…
	FF
	…
	FFF

21.5.18 Index Register

The Index Register will select which indirect register appears in the window register to be manipulated by software. Software will program this register to select the desired APIC internal register.

Register: Index **BAR:** XBAR **Offset:** 00h			
Bit	**Attr**	**Default**	**Description**
7:0	RW	0	**Index (IDX):** Indirect register to access.

21.5.19 Window Register

This is a 32-bit register specifying the data to be read or written to the register pointed to by the index register. This register can be accessed in byte quantities.

Register: Window BAR: MBAR Offset: 10h			
Bit	**Attr**	**Default**	**Description**
31:0	RW	0	**Window (WND):** Data to be written to the indirect register on writes, and location of read data from the indirect register on reads.

21.5.20 PAR Register

Register: PAR BAR: MBAR Offset: 20h			
Bit	**Attr**	**Default**	**Description**
7:0	RO	0	**Assertion (PAR):** IOH does not allow writes to the PAR to cause MSI interrupts.

21.5.21 EOI Register

Register: EOI BAR: MBAR Offset: 40h			
Bit	**Attr**	**Default**	**Description**
7:0	RW	0	**EOI:** The EOI register is present to provide a mechanism to efficiently convert level interrupts to edge triggered MSI interrupts. When a write is issued to this register, the I/O(x)APIC will check the lower 8 bits written to this register, and compare it with the vector field for each entry in the I/O Redirection Table. When a match is found, the Remote_IRR bit for that I/O Redirection Entry will be cleared. Note that if multiple I/O Redirection entries, for any reason, assign the same vector, each of those entries will have the Remote_IRR bit reset to '0'. This will cause the corresponding I/OxAPIC entries to resample their level interrupt inputs and if they are still asserted, cause more MSI interrupt(s) (if unmasked) which will again set the Remote_IRR bit.

Table 21-6. I/OxAPIC Indexed Registers (Redirection Table Entries)

Indexed Register	Index
APICID	00h
Version	01h
ARBID	02h
BCFG	03h
	…
	…
RTL0	10h
RTH0	11h
RTL1	12h
RTH1	13h
	…
	…
	…
	…
RTL23	3Eh
RTH23	3Fh
	40h
	…
	FFh

21.5.22 APICID

This register uniquely identifies an APIC in the system. This register is not used by OS'es anymore and is still implemented in hardware because of FUD.

Register: APICID
BAR: MBAR
Offset: 10h
IA: 00h

Bit	Attr	Default	Description
31:28	RV	0	Reserved
27:24	RW	0	**APICID:** Allows for up to 16 unique APIC IDs in the system.
23:0	RV	0	Reserved

21.5.23 Version

This register uniquely identifies an APIC in the system. This register is not used by OS'es anymore and is still implemented in hardware because of FUD.

Register: Version
BAR: MBAR
Offset: 10h
IA: 01h

Bit	Attr	Default	Description
31:24	RV	0	Reserved

Register: Version BAR: MBAR Offset: 10h IA: 01h			
Bit	**Attr**	**Default**	**Description**
23:16	RO	17h	**Maximum Redirection Entries (MAX):** This is the entry number of the highest entry in the redirection table. It is equal to the number of interrupt inputs minus one. This field is hardwired to 17h to indicate 24 interrupts.
15	RO	0	**IRQ Assertion Register Supported (PRQ):** This bit is set to 0 to indicate that this version of the I/OxAPIC does not implement the IRQ Assertion register and does not allow PCI devices to write to it to cause interrupts.
14:8	RV	0	Reserved
7:0	RO	20h	**Version (VS):** This identifies the implementation version. This field is hardwired to 20h indicate this is an I/OxAPIC.

21.5.24 ARBID

This is a legacy register carried over from days of serial bus interrupt delivery. This register has no meaning in IOH. It just tracks the APICID register for compatibility reasons.

Register: ARBUID BAR: MBAR Offset: 10h IA: 02h			
Bit	**Attr**	**Default**	**Description**
31:28	RV	0	Reserved
27:24	RO	0	**Arbitration ID:** Just tracks the APICID register.
23:0	RV	0	Reserved

21.5.25 BCFG

Register: BCFG BAR: MBAR Offset: 10h IA: 03h			
Bit	**Attr**	**Default**	**Description**
7:1	RV	0	Reserved
0	RW	1	**Boot Configuration:** This bit is a default1 to indicate FSB delivery mode. A value of 0 has no effect. Its left as RW for software compatibility reasons.

21.5.26 RTL[0:23]: Redirection Table Low DWORD

The information in this register along with Redirection Table High DWORD register is used to construct the MSI interrupt. There is one of these pairs of registers for every interrupt. The first interrupt has the redirection registers at offset 10h. The second interrupt at 12h, third at 14h, and so on, until the final interrupt (interrupt 23) at 3Eh.

Register: RTL[0:23] BAR: MBAR Offset: 10h IA: 10h- 3Eh by 2			
Bit	**Attr**	**Default**	**Description**
31:18	RV	0	Reserved
17	RW	0	**Disable Flushing:** This bit has no meaning in IOH. This bit is R/W for software compatibility reasons only
16	RW	1	**Mask (MSK):** When cleared, an edge assertion or level (depending on bit 15 in this register) on the corresponding interrupt input results in delivery of an MSI interrupt using the contents of the corresponding redirection table high/low entry. When set, an edge or level on the corresponding interrupt input does not cause MSI Interrupts and no MSI interrupts are held pending as well (that is, if an edge interrupt asserted when the mask bit is set, no MSI interrupt is sent and the hardware does not remember the event to cause an MSI later when the mask is cleared). When set, assertion/deassertion of the corresponding interrupt input causes Assert/Deassert_INTx messages to be sent to the legacy ICH, provided the 'Disable PCI INTx Routing to ICH' bit is clear. If the latter is set, Assert/ Deassert_INTx messages are not sent to the legacy ICH. When mask bit goes from 1 to 0 for an entry and the entry is programmed for level input, the input is sampled and if asserted, an MSI is sent. Also, if an Assert_INTx message was previously sent to the legacy ICH/internal-coalescing logic on behalf of the entry, when the mask bit is clear, then a Deassert_INTx event is scheduled on behalf of the entry (whether this event results in a Deassert_INTx message to the legacy ICH depends on whether there were other outstanding Deassert_INTx messages from other sources). When the mask bit goes from 0 to 1, and the corresponding interrupt input is already asserted, an Assert_INTx event is scheduled on behalf of the entry. Note though that if the interrupt is deasserted when the bit transitions from 0 to 1, a Deassert_INTx is not scheduled on behalf of the entry.
15	RW	0	**Trigger Mode (TM):** This field indicates the type of signal on the interrupt input that triggers an interrupt. 0 indicates edge sensitive, 1 indicates level sensitive.
14	RO	0	**Remote IRR (RIRR):** This bit is used for level triggered interrupts; its meaning is undefined for edge triggered interrupts. For level triggered interrupts, this bit is set when an MSI interrupt has been issued by the I/OxAPIC into the system fabric (noting that if BME bit is clear or when the mask bit is set, no new MSI interrupts cannot be generated and this bit cannot transition from 0 to 1 in those conditions). It is reset (if set) when an EOI message is received from a local APIC with the appropriate vector number, at which time the level interrupt input corresponding to the entry is resampled causing one more MSI interrupt (if other enable bits are set) and causing this bit to be set again.
13	RW	0	**Interrupt Input Pin Polarity (IP):** 0=active high; 1=active low. Strictly, speaking this bit has no meaning in IOH since the Assert/Deassert_INTx messages are level in-sensitive. But the core I/OxAPIC logic that is reused from PXH might be built to use this bit to determine the correct polarity. Most OS'es today support only active low interrupt inputs for PCI devices. Given that, the OS is expected to program a 1 into this register and so the "internal" virtual wire signals in the IOH need to be active low, that is, 0=asserted and 1=deasserted.
12	RO	0	**Delivery Status:** When trigger mode is set to level and the entry is unmasked, this bit indicates the state of the level interrupt, that is, 1b if interrupt is asserted else 0b. When the trigger mode is set to level but the entry is masked, this bit is always 0b. This bit is always 0b when trigger mode is set to edge.
11	RW	0	**Destination Mode (DSTM):** 0 – Physical 1 – Logical

Register: RTL[0:23] BAR: MBAR Offset: 10h IA: 10h- 3Eh by 2			
Bit	**Attr**	**Default**	**Description**
10:8	RW	0	**Delivery Mode (DELM):** This field specifies how the APICs listed in the destination field should act upon reception of the interrupt. Certain Delivery Modes will only operate as intended when used in conjunction with a specific trigger mode. The encodings are: 000 – Fixed: Trigger Mode can be edge or level. Examine TM bit to determine. 001 – Lowest Priority: Trigger Mode can be edge or level. Examine TM bit to determine. 010 – SMI/PMI: Trigger mode is always edge and TM bit is ignored. 011 – Reserved 100 – NMI. Trigger mode is always edge and TM bit is ignored. 101 – INIT. Trigger mode is always edge and TM bit is ignored. 110 – Reserved 111 – ExtINT. Trigger mode is always edge and TM bit is ignored.
7:0	RW	0	**Vector (VCT):** This field contains the interrupt vector for this interrupt

21.5.27 RTH[0:23]: Redirection Table High DWORD

Register: RTH[0:23] BAR: MBAR Offset: 10h IA: 11h - 3h by 2			
Bit	**Attr**	**Default**	**Description**
31:24	RW	0h	**Destination ID (DID):** They are bits [19:12] of the MSI address.
23:16	RW	0h	**Extended Destination ID (EDID):** These bits become bits [11:4] of the MSI address.
15:00	RV	0h	Reserved

21.6 Intel® VT, Address Mapping, System Management, Device Hide, Misc

The offsets shown in Table 21-4 are offsets from the base of the CSR region. Any change to these registers under that event can only happen during an Intel QuickPath Interconnect quiescence flow. Any exceptions will be called out when appropriate.

Table 21-7. Core Registers (Dev 20, Function 0) - Offset 0x00-0xFF

DID	VID		00h			80h
PCISTS	PCICMD		04h			84h
CCR		RID	08h	GENPROTRANGE0.BASE		88h
	HDR	CLS	0Ch			8Ch
			10h	GENPROTRANGE0.LIMIT		90h
			14h			94h
			18h	IOHMISCCTRL		98h
			1Ch	IOHMISCSS		9Ch
			20h			A0h
			24h			A4h
			28h	TSEGCTRL		A8h
SID	SVID		2Ch			ACh
			30h	GENPROTRANGE1.BASE		B0h
		CAPPTR[1]	34h			B4h
			38h	GENPROTRANGE1.LIMIT		B8h
	INTP	INTL	3Ch			BCh
EXPCAPS	EXPNPTR	EXPCAPID	40h	GENPROTRANGE2.BASE		C0h
DEVCAP			44h			C4h
DEVSTS	DEVCTRL		48h	GENPROTRANGE2.LIMIT		C8h
RESERVED PCIe Header space			4Ch			CCh
			50h	TOLM		D0h
			54h	TOHM		D4h
			58h			D8h
			5Ch	NCMEM.BASE		DCh
			60h			E0h
			64h	NCMEM.LIMIT		E4h
			68h			E8h
			6Ch			ECh
			70h	DEVHIDE 1		F0h
			74h			F4h
			78h	DEVHIDE 2		F8h
			7Ch			FCh

Notes:

1. CAPPTR points to the first capability block

Table 21-8. Core Registers (Dev 20, Function 0)

Reserved for PCIe header space				100h	VTBAR		180h
				104h		VTGENCTRL	184h
	IOHBUSNO	LIO.LIMIT	LIO.BASE	108h			188h
LMMIOL.LIMIT		LMMIOL.BASE		10Ch	VTGENCTRL2		18Ch
LMMIOH.LIMIT		LMMIOH.BASE		110h	VTSTS		190h
LMMIOH.BASEU				114h			194h
LMMIOH.LIMITU				118h			198h
		LCFGBUS.LIMIT	LCFGBUS.BASE	11Ch			19Ch
		GIO.LIMIT	GIO.BASE	120h			1A0h
GMMIOL.LIMIT		GMMIOL.BASE		124h			1A4h
GMMIOH.LIMIT		GMMIOH.BASE		128h	VTUNCERRSTS		1A8h
GMMIOH.BASEU				12Ch	VTUNCERRMSK		1ACh
GMMIOH.LIMITU				130h	VTUNCERRSEV		1B0h
		GCFGBUS.LIMIT	GCFGBUS.BASE	134h	VTUNCERRPTR		1B4h
				138h			1B8h
				13Ch			1BCh
				140h			1C0h
				144h			1C4h
DUALIOAPIC.ABAR LIMIT		DUALIOAPIC.ABAR BASE		148h			1C8h
				14Ch			1CCh
				150h			1D0h
				154h			1D4h
				158h			1D8h
				15Ch			1DCh
				160h			1E0h
				164h			1E4h
				168h			1E8h
				16Ch			1ECh
				170h			1F0h
				174h			1F4h
				178h			1F8h
				17Ch			1FCh

21.6.1 GENPROTRANGE0.BASE: Generic Protected Memory Range 0 Base Address Register

Register: GENPROTRANGE0.BASE
Device: 20
Function: 0
Offset: 88h

Bit	Attr	Default	Description
63:51	RO	0	Correspond to address A[63:51] of the protected range and is always 0.
50:16	RWLB	7_FFFF_FFFFh	**Base address** [50:16] of generic memory address range that needs to be protected from inbound dma accesses. The protected memory range can be anywhere in the memory space addressable by the processor. Addresses that fall in this range i.e. GenProtRange.Base[63:16] <= Address [63:16] <= GenProtRange.Limit [63:16], are completer aborted by IOH. Setting the Protected range base address greater than the limit address disables the protected memory region. Note that this range is orthogonal to VT-d spec defined protected address range. This register is programmed once at boot time and does not change after that, including any quiesce flows.
15:0	RV	0	Reserved

21.6.2 GENPROTRANGE0.LIMIT: Generic Protected Memory Range 0 Limit Address Register

Register: GENPROTRANGE0.LIMIT
Device: 20
Function: 0
Offset: 90h

Bit	Attr	Default	Description
63:51	RO	0	Correspond to address A[63:51] of the protected range and is always 0.
50:16	RWLB	0	**Limit address** [50:16] of generic memory address range that needs to be protected from inbound dma accesses. The protected memory range can be anywhere in the memory space addressable by the processor. Addresses that fall in this range i.e. GenProtRange.Base[63:16] <= Address [63:16] <= GenProtRange.Limit [63:16], are completer aborted by IOH. Setting the Protected range base address greater than the limit address disables the protected memory region. Note that this range is orthogonal to VT-d spec defined protected address range. This register is programmed once at boot time and does not change after that, including any quiesce flows.
15:0	RV	0	Reserved

21.6.3 IOHMISCCTRL: IOH MISC Control Register

Register: IOHMISCCTRL
Device: 20
Function: 0
Offset: 98h

Bit	Attr	Default	Description
31:14	RV	0	*Reserved*
13	RW	0	**CPUCSR_IB_Abort**: This bit controls if inbound access to CPUCSR range is aborted. 0 - IB access to CPUCSR range is enabled, that is, allowed. 1 - IB access to CPUCSR range is disabled, that is, disallowed.
12	RW	0	**Lock Thawing Mode.** Mode controls how inbound queues in the south agents (PCIe, ESI) thaw when they are target of a locked read. 0 - Thaw only posted requests 1 - Thaw posted and non-posted requests.
11:10	RW	strap	**SUBDECEN** Indicates the port that provides the subtractive decode path for inbound and outbound decode. 00 - ESI 01 - Reserved 10 - Reserved 11 - Intel QuickPath Interconnect When this points to ESI, all address ranges in the peer-to-peer config space of the port are ignored for address decode purposes. When this field is 00, then the IOH is the legacy IOH. The strap referred to in the default field is the LEGACYIOH strap.
9	RV	0	Reserved
8	RW	0	**TOCMVALID:** This bit is set by software after it has initialized the TOCM register with the right value. IOH decoder uses this bit to determine if bits from 32 to TOCM are to be decoded towards privileged CSR space.
7:3	RW	01001	**TOCM** Indicates the top of Intel QuickPath Interconnect physical addressability limit. 00000-00100: Reserved 00101: 2^37 00110: 2^38 ... 10011: 2^51 10100 -11111: *Reserve* IOH uses this to abort all inbound transactions that cross this limit.
2	RW	0	**EN1K** This bit when set, enables 1K granularity for I/O space decode in each of the virtual P2P bridges corresponding to root ports, and ESI ports.
1:0	RV	0	Reserved

21.6.4 IOHMISCSS: IOH MISC Status

Register: IOHMISCSS
Device: 20
Function: 0
Offset: 9Ch

Bit	Attr	Default	Description
31:30	RV	0	*Reserved*
29	RO	Strap: NODEID2	NodeID2 - Node ID 2
28	RO	Strap: DualIOH_QPIPTSEL	Intel QuickPath Interconnect/NodeID3 - For dual node configurations, indicates which Intel QuickPath Interconnect port is connected to the other IOH. For all configurations, this strap indicates NID3 value.
27	RV	0	*Reserved*
26	RO	strap: TESTHI[4]	Must be pulled high.
25	RO	strap: DUALIOH	**DUALIOH** - Indicates dual IOH configuration
24:18	RV	0	*Reserved*
17	RO	strap: LEGACYIOH	**Legacy IOH.**
16	RO	strap: TESTHI1	Firmware Agent. Legacy IOHs are advertised as a firmware agent.
15:10	RO	strap: PCEWIDTH[5:0]	**PCIe Link width select**
9:8	RO	strap:DDRFREQ[3:2]	**DDR Frequency selection**
7:6	RV	0	*Reserved*
5	RO	strap: PESBLCSEL	**PESBLCSEL**
4	RO	strap: QPISBLCSEL	**QPISBLCSEL**
3	RV	0	Reserved
2	RO	strap: SMBUSID	**SMBUSID**
1:0	RO	strap: QPIFREQSEL[1:0]	**QPIFREQSEL[1:0]**

21.6.5 IOH System Management Registers

21.6.5.1 TSEGCTRL: TSeg Control Register

The location of the TSeg region, size, and enable/disable control.

Register: TSEGCTRL Device: 20 Function: 0 Offset: A8h			
Bit	**Attr**	**Default**	**Description**
31:20	RWO	FE0h	**TBA: TSeg Base Address** Indicates the base address which is aligned to a 1MB boundary. Bits [31:20] corresponds to A[31:20] address bits.
19:4	RV	0	*Reserved*
3:1	RWO	100	**TSEG_SIZE: Size of TSeg** 000: 512KB 001: 1 MB 010: 2 MB 011: 4MB 100: 8 MB 101-111: *Reserved*
0	RWO	1	**TSEG_EN: TSeg Enabling Control** 0: Disabling the TSeg in IOH. 1: Enabling the TSeg in IOH for IB access check.

21.6.5.2 GENPROTRANGE.BASE1: Generic Protected Memory Range 1 Base Address Register

Register: GENPROTRANGE.BASE1 Device: 20 Function: 0 Offset: B0h			
Bit	**Attr**	**Default**	**Description**
63:51	RO	0	Correspond to address A[63:51] of the protected range and is always 0.
50:16	RW	7_FFFF-FFFFh	**Base address** [50:16] of generic memory address range. The protected memory range can be anywhere in the memory space addressable by the processor. Addresses that fall in this range, that is, GenProtRange.Base[63:16] <= Address [63:16] <= GenProtRange.Limit [63:19], are completer aborted by IOH. Setting the Protected range base address greater than the limit address disables the protected memory region. This register is programmed once at boot time and does not change after that, including any quiesce flows.
15:0	RV	0	Reserved

21.6.5.3 GENPROTRANGE1.LIMIT: Generic Protected Memory Range 1 Limit Address Register

Register: GENPROTRANGE1.LIMIT
Device: 20
Function: 0
Offset: B8h

Bit	Attr	Default	Description
63:51	RO	0	Correspond to address A[63:51] of the protected range and is always 0.
50:16	RWLB	0	**Limit address** [50:16] of generic memory address. The protected memory range can be anywhere in the memory space addressable by the processor. Addresses that fall in this range, that is, GenProtRange.Base[63:16] <= Address [63:16] <= GenProtRange.Limit [63:19], are completer aborted by IOH. Setting the Protected range base address greater than the limit address disables the protected memory region. This register is programmed once at boot time and does not change after that, including any quiesce flows.
15:0	RV	0	Reserved

21.6.5.4 GENPROTRANGE2.BASE: Generic Protected Memory Range 2 Base Address Register

Register: GENPROTRANGE2.BASE
Device: 20
Function: 0
Offset: C0h

Bit	Attr	Default	Description
63:51	RO	0	Correspond to address A[63:51] of the protected range and is always 0.
50:16	RWLB	7_FFFF_FFFFh	**Base address** [50:19] of generic memory address range. The protected memory range can be anywhere in the memory space addressable by the processor. Addresses that fall in this range, that is, GenProtRange.Base[63:16] <= Address [63:16] <= GenProtRange.Limit [63:19], are completer aborted by IOH. Setting the Protected range base address greater than the limit address disables the protected memory region. Note that this range is orthogonal to Intel VT-d spec defined protected address range. This register is programmed once at boot time and does not change after that, including any quiesce flows.
15:0	RV	0	Reserved

21.6.5.5 GENPROTRANGE2.LIMIT: Generic Protected Memory Range 2 Limit Address Register

Register: GENPROTRANGE.LIMIT
Device: 20
Function: 0
Offset: C8h

Bit	Attr	Default	Description
63:51	RO	0	Correspond to address A[63:51] of the protected range and is always 0.
50:16	RWLB	0	**Limit address** [50:16] of generic memory address range. The protected memory range can be anywhere in the memory space addressable by the processor. Addresses that fall in this range, that is, GenProtRange.Base[63:16] <= Address [63:16] <= GenProtRange.Limit [63:19], are completer aborted by IOH. Setting the Protected range base address greater than the limit address disables the protected memory region. Note that this range is orthogonal to Intel VT-d spec defined protected address range. This register is programmed once at boot time and does not change after that, including any quiesce flows.
15:0	RV	0	Reserved

21.6.5.6 TOLM: Top of Low Memory

Top of low memory. Note that bottom of low memory is assumed to be 0.

Register: TOLM
Device: 20
Function: 0
Offset: D0h

Bit	Attr	Default	Description
31:26	RWLB	0	**TOLM address** Indicates the top of low dram memory which is aligned to a 64MB boundary. A 32 bit transaction that satisfies '0 <= A[31:26] <= TOLM[31:26]" is a transaction towards main memory.
25:0	RV	0	*Reserved*

21.6.5.7 TOHM: Top of High Memory

Top of high memory. Note that bottom of high memory is fixed at 4 GB.

Register: TOHM
Device: 20
Function: 0
Offset: D4h

Bit	Attr	Default	Description
63:26	RWLB	0	**TOHM address** Indicates the limit of an aligned 64 MB granular region that decodes > 4 GB addresses towards system dram memory. A 64-bit transaction that satisfies '4G <= A[63:26] <= TOHM[63:26]" is a transaction towards main memory. This register is programmed once at boot time and does not change after that, including any quiesce flows.
25:0	RV	0	*Reserved*

21.6.5.8 NCMEM.BASE: NCMEM Base

Base address of Intel® QuickPath Interconnect non-coherent memory.

Register: NCMEM.BASE Device: 20 Function: 0 Offset: DCh			
Bit	**Attr**	**Default**	**Description**
63:26	RWLB	3F_FFFF_FFFFh	**Non Coherent memory base address** Describes the base address of a 64MB aligned dram memory region on Intel QuickPath Interconnect that is non-coherent. Address bits [63:26] of an inbound address if it satisfies 'NcMem.Base[63:26] <= A[63:26] <= NcMem.Limit[63:26]' is considered to be towards the non-coherent Intel QuickPath Interconnect memory region. Its expected that the range indicated by the Non-coherent memory base and limit registers is a subset of either the low dram or high dram memory regions as described via the corresponding base and limit registers. This register is programmed once at boot time and does not change after that, including any quiesce flows.
25:0	RV	0	*Reserved*

21.6.5.9 NCMEM.LIMIT: NCMEM Limit

Limit of Intel QuickPath Interconnect non-coherent memory.

Register: NCMEM.LIMIT Device: 20 Function: 0 Offset: E4h			
Bit	**Attr**	**Default**	**Description**
63:26	RW	0	**Non Coherent memory limit address** Describes the limit address of a 64MB aligned dram memory region on Intel QuickPath Interconnect that is non-coherent. Address bits [63:26] of an inbound address if it satisfies 'NcMem.Base[63:26] <= A[63:26] <= NcMem.Limit[63:26]' is considered to be towards the non-coherent Intel® QuickPath Interconnect memory region. Its expected that the range indicated by the Non-coherent memory base and limit registers is a subset of either the low dram or high dram memory regions as described via the corresponding base and limit registers. This register is programmed once at boot time and does not change after that, including any quiesce flows.
25:0	RV	0	*Reserved*

21.6.5.10 DEVHIDE1: Device Hide 1 Register

This register provides a method to hide the PCI config space of devices inside IOH, from the host initiated configuration accesses. This register has no impact on configuration accesses from SMBUS/JTAG ports of IOH. When set, all PCI configuration accesses from Intel QPI targeting the corresponding device's configuration space inside IOH are master aborted. When clear, configuration accesses targeting the device's configuration space are allowed.

Register: DEVHIDE1
Device: 20
Function: 0
Offset: F0h

Bit	Attr	Default	Description
31	RWLB	0	**Hide_Dev18_fun1:** When set, all PCI configuration accesses from Intel QuickPath Interconnect targeting the corresponding device's configuration space inside IOH are master aborted. When clear, configuration accesses targeting the device's configuration space are allowed. If software hides function#0 in either device 16, or 17, it needs to hide all functions within that device to comply with PCI rules. This bit has no effect on SMBUS and JTAG initiated accesses to corresponding device's config space.
30	RWLB	0	**Hide_Dev18_fun0:** When set, all PCI configuration accesses from Intel QuickPath Interconnect targeting the corresponding device's configuration space inside IOH are master aborted. When clear, configuration accesses targeting the device's configuration space are allowed. If software hides function#0 in either device 16, or 17, it needs to hide all functions within that device to comply with PCI rules. This bit has no effect on SMBUS and JTAG initiated accesses to corresponding device's config space.
29	RWLB	0	**Hide_Dev17_fun1:** When set, all PCI configuration accesses from Intel QuickPath Interconnect targeting the corresponding device's configuration space inside IOH are master aborted. When clear, configuration accesses targeting the device's configuration space are allowed. If software hides function#0 in either device 16, or 17, it needs to hide all functions within that device to comply with PCI rules. This bit has no effect on SMBUS and JTAG initiated accesses to corresponding device's config space.
28	RWLB	0	**Hide_Dev17_fun0:** When set, all PCI configuration accesses from Intel QuickPath Interconnect targeting the corresponding device's configuration space inside IOH are master aborted. When clear, configuration accesses targeting the device's configuration space are allowed. If software hides function#0 in either device 16, or 17, it needs to hide all functions within that device to comply with PCI rules. This bit has no effect on SMBUS and JTAG initiated accesses to corresponding device's config space.
27	RWLB	0	**Hide_Dev16_fun1:** When set, all PCI configuration accesses from Intel® QuickPath Interconnect targeting the corresponding device's configuration space inside IOH are master aborted. When clear, configuration accesses targeting the device's configuration space are allowed. If software hides function#0 in either device 16, or 17, it needs to hide all functions within that device to comply with PCI rules. This bit has no effect on SMBUS and JTAG initiated accesses to corresponding device's config space.

Register: DEVHIDE1 Device: 20 Function: 0 Offset: F0h			
Bit	**Attr**	**Default**	**Description**
26	RWLB	0	**Hide_Dev16_fun0:** When set, all PCI configuration accesses from Intel QuickPath Interconnect targeting the corresponding device's configuration space inside IOH are master aborted. When clear, configuration accesses targeting the device's configuration space are allowed. If software hides function#0 in either device 16, or 17, it needs to hide all functions within that device to comply with PCI rules. This bit has no effect on SMBUS and JTAG initiated accesses to corresponding device's config space.
25	RWLB	0	**Hide_Dev15_fun0:** When set, all PCI configuration accesses from Intel QuickPath Interconnect targeting the corresponding device's configuration space inside IOH are master aborted. When clear, configuration accesses targeting the device's configuration space are allowed. If software hides function#0 in either device 16, or 17, it needs to hide all functions within that device to comply with PCI rules. This bit has no effect on SMBUS and JTAG initiated accesses to corresponding device's config space.
24	RWLB	0	**Hide_Dev14_fun3:** When set, all PCI configuration accesses from Intel QuickPath Interconnect targeting the corresponding device's configuration space inside IOH are master aborted. When clear, configuration accesses targeting the device's configuration space are allowed. If software hides function#0 in either device 16, or 17, it needs to hide all functions within that device to comply with PCI rules. This bit has no effect on SMBUS and JTAG initiated accesses to corresponding device's config space.
23	RWLB	0	**Hide_Dev14_fun2:** When set, all PCI configuration accesses from Intel QuickPath Interconnect targeting the corresponding device's configuration space inside IOH are master aborted. When clear, configuration accesses targeting the device's configuration space are allowed. If software hides function#0 in either device 16, or 17, it needs to hide all functions within that device to comply with PCI rules. This bit has no effect on SMBUS and JTAG initiated accesses to corresponding device's config space.
22	RWLB	0	**Hide_Dev14_fun1:** When set, all PCI configuration accesses from Intel QuickPath Interconnect targeting the corresponding device's configuration space inside IOH are master aborted. When clear, configuration accesses targeting the device's configuration space are allowed. If software hides function#0 in either device 16, or 17, it needs to hide all functions within that device to comply with PCI rules. This bit has no effect on SMBUS and JTAG initiated accesses to corresponding device's config space.
21	RWLB	0	**Hide_Dev14_fun0**: When set, all PCI configuration accesses from Intel QuickPath Interconnect targeting the corresponding device's configuration space inside IOH are master aborted. When clear, configuration accesses targeting the device's configuration space are allowed. If software hides function#0 in either device 16, or 17, it needs to hide all functions within that device to comply with PCI rules. This bit has no effect on SMBUS and JTAG initiated accesses to corresponding device's config space.

Register: DEVHIDE1
Device: 20
Function: 0
Offset: F0h

Bit	Attr	Default	Description
20	RWLB	0	**Hide_Dev13_fun7:** When set, all PCI configuration accesses from Intel QuickPath Interconnect targeting the corresponding device's configuration space inside IOH are master aborted. When clear, configuration accesses targeting the device's configuration space are allowed. If software hides function#0 in either device 16, or 17, it needs to hide all functions within that device to comply with PCI rules. This bit has no effect on SMBUS and JTAG initiated accesses to corresponding device's config space.
19	RWLB	0	**Hide_Dev13_fun6:** When set, all PCI configuration accesses from Intel QuickPath Interconnect targeting the corresponding device's configuration space inside IOH are master aborted. When clear, configuration accesses targeting the device's configuration space are allowed. If software hides function#0 in either device 16, or 17, it needs to hide all functions within that device to comply with PCI rules. This bit has no effect on SMBUS and JTAG initiated accesses to corresponding device's config space.
18	RWLB	0	**Hide_Dev13_fun5:** When set, all PCI configuration accesses from Intel QuickPath Interconnect targeting the corresponding device's configuration space inside IOH are master aborted. When clear, configuration accesses targeting the device's configuration space are allowed. If software hides function#0 in either device 16, or 17, it needs to hide all functions within that device to comply with PCI rules. This bit has no effect on SMBUS and JTAG initiated accesses to corresponding device's config space.
17	RWLB	0	**Hide_Dev13_fun4:** When set, all PCI configuration accesses from Intel QuickPath Interconnect targeting the corresponding device's configuration space inside IOH are master aborted. When clear, configuration accesses targeting the device's configuration space are allowed. If software hides function#0 in either device 16, or 17, it needs to hide all functions within that device to comply with PCI rules. This bit has no effect on SMBUS and JTAG initiated accesses to corresponding device's config space.
16	RWLB	0	**Hide_Dev13_fun3:** When set, all PCI configuration accesses from Intel QuickPath Interconnect targeting the corresponding device's configuration space inside IOH are master aborted. When clear, configuration accesses targeting the device's configuration space are allowed. If software hides function#0 in either device 16, or 17, it needs to hide all functions within that device to comply with PCI rules. This bit has no effect on SMBUS and JTAG initiated accesses to corresponding device's config space.
15	RWLB	0	**Hide_Dev13_fun2:** When set, all PCI configuration accesses from Intel QuickPath Interconnect targeting the corresponding device's configuration space inside IOH are master aborted. When clear, configuration accesses targeting the device's configuration space are allowed. If software hides function#0 in either device 16, or 17, it needs to hide all functions within that device to comply with PCI rules. This bit has no effect on SMBUS and JTAG initiated accesses to corresponding device's config space.

Register: DEVHIDE1 Device: 20 Function: 0 Offset: F0h			
Bit	**Attr**	**Default**	**Description**
14	RWLB	0	**Hide_Dev13_fun1:** When set, all PCI configuration accesses from Intel QuickPath Interconnect targeting the corresponding device's configuration space inside IOH are master aborted. When clear, configuration accesses targeting the device's configuration space are allowed. If software hides function#0 in either device 16, or 17, it needs to hide all functions within that device to comply with PCI rules. This bit has no effect on SMBUS and JTAG initiated accesses to corresponding device's config space.
13	RWLB	0	**Hide_Dev13_fun0:** When set, all PCI configuration accesses from Intel QuickPath Interconnect targeting the corresponding device's configuration space inside IOH are master aborted. When clear, configuration accesses targeting the device's configuration space are allowed. If software hides function#0 in either device 16, or 17, it needs to hide all functions within that device to comply with PCI rules. This bit has no effect on SMBUS and JTAG initiated accesses to corresponding device's config space.
12	RWLB	0	**Hide_Dev20_fun3:** When set, all PCI configuration accesses from Intel QuickPath Interconnect targeting the corresponding device's configuration space inside IOH are master aborted. When clear, configuration accesses targeting the device's configuration space are allowed. If software hides function#0 in either device 16, or 17, it needs to hide all functions within that device to comply with PCI rules. This bit has no effect on SMBUS and JTAG initiated accesses to corresponding device's config space.
11	RWLB	0	**Hide_Dev14_fun4:** When set, all PCI configuration accesses from Intel QuickPath Interconnect targeting the corresponding device's configuration space inside IOH are master aborted. When clear, configuration accesses targeting the device's configuration space are allowed. If software hides function#0 in either device 16, or 17, it needs to hide all functions within that device to comply with PCI rules. This bit has no effect on SMBUS and JTAG initiated accesses to corresponding device's config space.
10	RWLB	0	**Hide_Dev10:** When set, all PCI configuration accesses from Intel QuickPath Interconnect targeting the corresponding device's configuration space inside IOH are master aborted. When clear, configuration accesses targeting the device's configuration space are allowed. If software hides function#0 in either device 16, or 17, it needs to hide all functions within that device to comply with PCI rules. This bit has no effect on SMBUS and JTAG initiated accesses to corresponding device's config space.
9	RWLB	0	**Hide_Dev9:** When set, all PCI configuration accesses from Intel QuickPath Interconnect targeting the corresponding device's configuration space inside IOH are master aborted. When clear, configuration accesses targeting the device's configuration space are allowed. If software hides function#0 in either device 16, or 17, it needs to hide all functions within that device to comply with PCI rules. This bit has no effect on SMBUS and JTAG initiated accesses to corresponding device's config space.

Register: DEVHIDE1 Device: 20 Function: 0 Offset: F0h			
Bit	**Attr**	**Default**	**Description**
8	RWLB	0	**Hide_Dev8:** When set, all PCI configuration accesses from Intel QuickPath Interconnect targeting the corresponding device's configuration space inside IOH are master aborted. When clear, configuration accesses targeting the device's configuration space are allowed. If software hides function#0 in either device 16, or 17, it needs to hide all functions within that device to comply with PCI rules. This bit has no effect on SMBUS and JTAG initiated accesses to corresponding device's config space.
7	RWLB	0	**Hide_Dev7:** When set, all PCI configuration accesses from Intel QuickPath Interconnect targeting the corresponding device's configuration space inside IOH are master aborted. When clear, configuration accesses targeting the device's configuration space are allowed. If software hides function#0 in either device 16, or 17, it needs to hide all functions within that device to comply with PCI rules. This bit has no effect on SMBUS and JTAG initiated accesses to corresponding device's config space.
6	RWLB	0	**Hide_Dev6:** When set, all PCI configuration accesses from Intel QuickPath Interconnect targeting the corresponding device's configuration space inside IOH are master aborted. When clear, configuration accesses targeting the device's configuration space are allowed. If software hides function#0 in either device 16, or 17, it needs to hide all functions within that device to comply with PCI rules. This bit has no effect on SMBUS and JTAG initiated accesses to corresponding device's config space.
5	RWLB	0	**Hide_Dev5:** When set, all PCI configuration accesses from Intel QuickPath Interconnect targeting the corresponding device's configuration space inside IOH are master aborted. When clear, configuration accesses targeting the device's configuration space are allowed. If software hides function#0 in either device 16, or 17, it needs to hide all functions within that device to comply with PCI rules. This bit has no effect on SMBUS and JTAG initiated accesses to corresponding device's config space.
4	RWL	0	**Hide_Dev8:** When set, all PCI configuration accesses from Intel QuickPath Interconnect targeting the corresponding device's configuration space inside IOH are master aborted. When clear, configuration accesses targeting the device's configuration space are allowed. If software hides function#0 in either device 16, or 17, it needs to hide all functions within that device to comply with PCI rules. This bit has no effect on SMBUS and JTAG initiated accesses to corresponding device's config space.

Register: DEVHIDE1 Device: 20 Function: 0 Offset: F0h			
Bit	**Attr**	**Default**	**Description**
3	RWL	0	**Hide_Dev3:** When set, all PCI configuration accesses from Intel QuickPath Interconnect targeting the corresponding device's configuration space inside IOH are master aborted. When clear, configuration accesses targeting the device's configuration space are allowed. If software hides function#0 in either device 16, or 17, it needs to hide all functions within that device to comply with PCI rules. This bit has no effect on SMBUS and JTAG initiated accesses to corresponding device's config space.
2	RWL	0	**Hide_Dev2:** When set, all PCI configuration accesses from Intel QuickPath Interconnect targeting the corresponding device's configuration space inside IOH are master aborted. When clear, configuration accesses targeting the device's configuration space are allowed. If software hides function#0 in either device 16, or 17, it needs to hide all functions within that device to comply with PCI rules. This bit has no effect on SMBUS and JTAG initiated accesses to corresponding device's config space.
1	RWL	0	**Hide_Dev1:** When set, all PCI configuration accesses from Intel QuickPath Interconnect targeting the corresponding device's configuration space inside IOH are master aborted. When clear, configuration accesses targeting the device's configuration space are allowed. If software hides function#0 in either device 16, or 17, it needs to hide all functions within that device to comply with PCI rules. This bit has no effect on SMBUS and JTAG initiated accesses to corresponding device's config space.
0	RWL	0	**Hide_Dev0:** When set, all PCI configuration accesses from Intel QuickPath Interconnect targeting the corresponding device's configuration space inside IOH are master aborted. When clear, configuration accesses targeting the device's configuration space are allowed. If software hides function#0 in either device 16, or 17, it needs to hide all functions within that device to comply with PCI rules. This bit has no effect on SMBUS and JTAG initiated accesses to corresponding device's config space.

21.6.5.11 DEVHIDE2: Device Hide 2 Register

This register provides a method to hide the PCI config space of devices inside IOH, from the host initiated configuration accesses. This register has no impact on configuration accesses from SMBus/JTAG ports of an IOH.

Register: DEVHIDE2
Device: 20
Function: 0
Offset: F8h

Bit	Attr	Default	Description
31:15	RV	0	Reserved
14:7	RWLB	0	**Device/Function Hide:** Bit 7corresponds to Device#22/Function#0, bit 8 corresponds to Device#22/Function#1, ..., bit 14 corresponds to Device#22/Function#7. When set, all PCI configuration accesses from Intel QuickPath Interconnect targeting the corresponding device's configuration space inside IOH are master aborted. When clear, configuration accesses targeting the device's configuration space are allowed. If software hides function#0 in either device 22, it needs to hide all functions within that device to comply with PCI rules. This bit has no effect on SMBUS and JTAG initiated accesses to corresponding device's config space
6:0	RWLB	0	**Device/Function Hide:** Bit 0 corresponds to Device#18/Function#2, bit 1 corresponds to Device#18/Function#3,Bit 2 corresponds to Device#19/Function#0, bit 3 corresponds to Device#20/Function#0, Bit 4 corresponds to Device#20/Function#1, bit 5 corresponds to Device#20/Function#2, bit 6corresponds to Device#21/Function#0. When set, all PCI configuration accesses from Intel QuickPath Interconnect targeting the corresponding device's configuration space inside IOH are master aborted. When clear, configuration accesses targeting the device's configuration space are allowed. This bit has no effect on smbus and JTAG initiated accesses to corresponding device's config space. If software hides function#0 in device20, it needs to hide all functions within that device to comply with PCI rules. This bit has no impact on memory transactions targeting the device (e.g. memory transactions targeting the MBAR/ABAR region of IOAPIC)

21.6.5.12 IOHBUSNO: IOH Internal Bus Number

Register: IOHBUSNO
Device: 20
Function: 0
Offset: 10Ah

Bit	Attr	Default	Description
15:9	RV	Oh	RSVD
8	RW	0h	**Valid** 1: This IOH claims PCI config access to its internal devices (device/function) defined in Table 21-1 with the Bus number defined in bits[7:0] of this register only. 0: This IOH claims PCI config access to its internal devices (device/function) defined in Table 21-1 with ANY Bus number, regardless of bits[7:0] of this register.

Register: IOHBUSNO Device: 20 Function: 0 Offset: 10Ah			
Bit	**Attr**	**Default**	**Description**
7:0	RW	00h	**Internal bus number of IOH** Is used to compare against the bus no in the Intel QuickPath Interconnect config tx and decide if the access is to the IOH internal devices or it goes out to a bus hierarchy below the IOH's internal bus. This register is programmed once at boot time and does not change after that.

21.6.5.13 LIO.BASE: Local I/O Base Register

Provides the I/O range consumed by the hierarchy below an Intel QuickPath Interconnect port.

Register: LIO.BASE Device: 20 Function: 0 Offset: 108h			
Bit	**Attr**	**Default**	**Description**
7:4	RW	0h	**Local I/O Base Address** Corresponds to A[15:12] of the I/O addresses of the local hierarchy below Intel® QuickPath Interconnect port. An inbound I/O address that satisfies 'local I/O base[7:4] <= A[15:12] <= local I/O limit[7:4]' is treated as a local peer-to-peer transaction that does not cross an Intel QuickPath Interconnect link. Refer to Chapter 7 for more details of how this register is used in I/O cycle decoding. Setting LIO.BASE greater than LIO.LIMIT disables local IO peer-to-peer. This register is programmed once at boot time and does not change after that.
3:0	RV	0h	Reserved

21.6.5.14 LIO.LIMIT: Local I/O Limit Register

Register: LIO.LIMIT Device: 20 Function: 0 Offset: 109h			
Bit	**Attr**	**Default**	**Description**
7:4	RW	0h	**Local I/O Limit Address** Corresponds to A[15:12] of the I/O addresses of the local hierarchy below an Intel QuickPath Interconnect port. An inbound I/O address that satisfies 'local I/O base[7:4] <= A[15:12] <= local I/O limit[7:4]' is treated as a local peer-to-peer transaction that does not cross an Intel QuickPath Interconnect link. Refer to Chapter 7 for more details of how this register is used in the I/O cycle decoding. Setting LIO.BASE greater than LIO.LIMIT disables local IO peer-to-peer. This register is programmed once at boot time and does not change after that, including any quiesce flows.
3:0	RV	0h	Reserved

21.6.5.15 LMMIOL.BASE: Local MMIOL Base

Register: LMMIOL.BASE Device: 20 Function: 0 Offset: 10Ch			
Bit	**Attr**	**Default**	**Description**
15:8	RW	0h	**Local MMIOL Base Address** Corresponds to A[31:24] of MMIOL base address. An inbound memory address that satisfies 'local MMIOL base[15:8] <= A[31:24] <= local MMIOL limit[15:8]' is treated as a local peer-to-peer transaction that do not cross an Intel QuickPath Interconnect link. Refer to Chapter 7 for more details of how this register is used in the MMIO decoding. Setting LMMIOL.BASE greater than LMMIOL.LIMIT disables local MMIOL peer-to-peer. This register is programmed once at boot time and does not change after that, including any quiesce flows.
7:0	RV	0h	Reserved

21.6.5.16 LMMIOL.LIMIT: Local MMIOL Limit

Register: LMMIOL.LIMIT Device: 20 Function: 0 Offset: 10Eh			
Bit	**Attr**	**Default**	**Description**
15:8	RW	0h	**Local MMIOL Limit Address** Corresponds to A[31:24] of MMIOL limit. An inbound memory address that satisfies 'local MMIOL base[15:8] <= A[31:24] <= local MMIOL limit[15:8]' is treated as a local peer-to-peer transaction that does not cross an Intel QuickPath Interconnect link. Refer to Chapter 7 for more details of how this register is used in the MMIO decoding. Setting LMMIOL.BASE greater than LMMIOL.LIMIT disables local MMIOL peer-to-peer. This register is programmed once at boot time and does not change after that, including any quiesce flows.
7:0	RV	0h	*Reserved*

21.6.5.17 LMMIOH.BASE: Local MMIOH Base

Register: LMMIOH.BASE Device: 20 Function: 0 Offset: 110h			
Bit	**Attr**	**Default**	**Description**
15:10	RW	0h	**Local MMIOH Base Address** Corresponds to A[31:26] of MMIOH base. An inbound memory address that satisfies 'local MMIOH base upper[31:0] local MMIOH base[15:10] <= A[63:26] <= local MMIOH limit upper[31:0] local MMIOH limit[15:10]' is treated as a local peer-to-peer transaction that does not cross an Intel QuickPath Interconnect link. Refer to Chapter 7 for more details of how this register is used in the MMIO decoding. Setting LMMIOH.BASEU::LMMIOH.BASE greater than LMMIOH.LIMITU::LMMIOH.LIMIT disables local MMIOH peer-to-peer. This register is programmed once at boot time and does not change after that, including any quiesce flows.

Register: LMMIOH.BASE Device: 20 Function: 0 Offset: 110h			
Bit	**Attr**	**Default**	**Description**
9:0	RV	0h	Reserved

21.6.5.18 LMMIOH.LIMIT: Local MMIOH Limit

Register: LMMIOH.LIMIT Device: 20 Function: 0 Offset: 112h			
Bit	**Attr**	**Default**	**Description**
15:10	RW	0h	**Local MMIOH Limit Address** Corresponds to A[31:26] of MMIOH limit. An inbound memory address that satisfies 'local MMIOH base upper[31:0] local MMIOH base[15:10] <= A[63:26] <= local MMIOH limit upper[31:0] local MMIOH limit[15:10]' is treated as local a peer-to-peer transactions that does not cross an Intel QuickPath Interconnect link. Refer to Chapter 7 for more details of how this register is used in the MMIO decoding. Setting LMMIOH.BASEU LMMIOH.BASE greater than LMMIOH.LIMITU::LMMIOH.LIMIT disables local MMIOH peer-to-peer. This register is programmed once at boot time and does not change after that, including any quiesce flows.
8:0	RV	0h	Reserved

21.6.5.19 LMMIOH.BASEU: Local MMIOH Base Upper

Register: LMMIOH.BASEU Device: 20 Function: 0 Offset: 114h			
Bit	**Attr**	**Default**	**Description**
31:19	RO	0h	Correspond to address A[63:51] of the local MMIOH range and is always 0.
18:0	RW	0h	**Local MMIOH Base Upper Address** Corresponds to A[50:32] of MMIOH base. An inbound memory address that satisfies 'local MMIOH base upper[31:0]::local MMIOH base[15:10] <= A[63:26] <= local MMIOH limit upper[31:0]::local MMIOH limit[15:10]' is treated as a local peer-to-peer transaction that does not cross an Intel QuickPath Interconnect link. Refer to Chapter 7 for more details of how this register is used in the MMIO decoding. Setting LMMIOH.BASEU::LMMIOH.BASE greater than LMMIOH.LIMITU::LMMIOH.LIMIT disables local MMIOH peer-to-peer. This register is programmed once at boot time and does not change after that, including any quiesce flows.

21.6.5.20 LMMIOH.LIMITU: Local MMIOH Limit Upper

Register: LMMIOH.LIMITU
Device: 20
Function: 0
Offset: 118h

Bit	Attr	Default	Description
31:19	RO	0h	**Correspond to address A[63:51] of the local MMIOH range and is always 0.**
18:0	RW	0h	**Local MMIOH Limit Upper Address** Corresponds to A[50:32] of MMIOH limit. An inbound memory address that satisfies 'local MMIOH base upper[31:0]::local MMIOH base[15:10] <= A[63:26] <= local MMIOH limit upper[31:0]::local MMIOH limit[15:10]' is treated as local a peer-to-peer transactions that does not cross an Intel QuickPath Interconnect link. Refer to Chapter 7 for more details of how this register is used in the MMIO decoding. Setting LMMIOH.BASEU::LMMIOH.BASE greater than LMMIOH.LIMITU::LMMIOH.LIMIT disables local MMIOH peer-to-peer. This register is programmed once at boot time and does not change after that, including any quiesce flows.

21.6.5.21 LCFGBUS.BASE: Local Configuration Bus Number Base Register

Register: LCFGBUS.BASE
Device: 20
Function: 0
Offset: 11Ch

Bit	Attr	Default	Description
7:0	RW	0h	**Local Configuration Bus Number Base** Corresponds to base bus number of bus number range allocated to the hierarchy below the Intel QuickPath Interconnect link. An inbound or outbound configuration tx falls within the local bus number range if 'Local Bus Number Base [7:0] <= Bus Number[7:0] <= Local Bus Number Limit [7:0]' and such transactions are treated as local peer-to-peer transactions that do not cross an Intel QuickPath Interconnect link. Refer to Chapter 7 for more details of how this register is used in the configuration cycle decoding. Setting LCFGBUS.BASE greater than LCFGBUS.LIMIT disables local peer-to-peer configuration cycles. This register is programmed once at boot time and does not change after that, including any quiesce flows.

21.6.5.22 LCFGBUS.LIMIT: Local Configuration Bus Number Limit Register

Register: LCFGBUS.LIMIT Device: 20 Function: 0 Offset: 11Dh			
Bit	**Attr**	**Default**	**Description**
7:0	RW	0h	**Local Configuration Bus Number Limit** Corresponds to Limit bus number of bus number range allocated to the hierarchy below the Intel QuickPath Interconnect link. An inbound configuration falls within the local bus number range if 'Local Bus Number Base [7:0] <= Bus Number[7:0] <= Local Bus Number Limit [7:0]' and such transactions are treated as local peer-to-peer transactions that do not cross an Intel QuickPath Interconnect link. Refer to Chapter 7 for more details of how this register is used in the configuration cycle decoding. Setting LCFGBUS.BASE greater than LCFGBUS.LIMIT disables local peer-to-peer configuration cycles. This register is programmed once at boot time and does not change after that, including any quiesce flows. This register is programmed once at boot time and does not change after that, including any quiesce flows.

21.6.5.23 GIO.BASE: Global I/O Base Register

Register: GIO.BASE Device: 20 Function: 0 Offset: 120h			
Bit	**Attr**	**Default**	**Description**
7:4	RW	0h	**Global I/O Base Address** Corresponds to A[15:12] of the I/O addresses of the entire I/O region. An inbound or outbound I/O address that satisfies 'global I/O base[7:4] <= A[15:12] <= global I/O limit[7:4]' but is outside of the local I/O address range is treated as remote peer I/O over Intel QuickPath Interconnect. Refer to Chapter 7 for more details of how this register is used in the I/O cycle decoding. This register is programmed once at boot time and does not change after that, including any quiesce flows.
3:0	RV	0h	Reserved

21.6.5.24 GIO.LIMIT: Global I/O Limit Register

Register: GIO.LIMIT Device: 20 Function: 0 Offset: 121h			
Bit	**Attr**	**Default**	**Description**
7:4	RW	Fh	**Global I/O Limit Address** Corresponds to A[15:12] of the I/O addresses of the entire I/O region. An inbound or outbound I/O address that satisfies 'global I/O base[7:4] <= A[15:12] <= global I/O limit[7:4]' but is outside of the local I/O address range is treated as remote peer I/O over Intel QuickPath Interconnect. Refer to Chapter 7 for more details of how this register is used in the I/O cycle decoding. This register is programmed once at boot time and does not change after that, including any quiesce flows.
3:0	RV	0h	Reserved

21.6.5.25 GMMIOL.BASE: Global MMIOL Base

Register: GMMIOL.BASE Device: 20 Function: 0 Offset: 124h			
Bit	**Attr**	**Default**	**Description**
15:8	RW	0h	**Global MMIOL Base Address** Corresponds to A[31:24] of global MMIOL base. An inbound or outbound memory address that satisfies 'global MMIOL base[15:8] <= A[31:24] <= global MMIOL limit[15:8]' but is outside of the local MMIOL range is treated as a remote peer memory transaction over Intel QuickPath Interconnect. Refer to Chapter 7 for more details of how this register is used in MMIO decoding. Setting GMMIOL.BASE greater than GMMIOL.LIMIT disables global MMIOL peer-to-peer. This register is programmed once at boot time and does not change after that, including any quiesce flows.
7:0	RV	0h	Reserved

21.6.5.26 GMMIOL.LIMIT: Global MMIOL Limit

Register: GMMIOL.LIMIT Device: 20 Function: 0 Offset: 126h			
Bit	**Attr**	**Default**	**Description**
15:8	RW	0h	**Global MMIOL Limit Address** Corresponds to A[31:24] of global MMIOL limit. An inbound or outbound memory address that satisfies 'global MMIOL base[15:8] <= A[31:24] <= global MMIOL limit[15:8]' but is outside of the local MMIOL range is treated as a remote peer-to-peer transaction over Intel QuickPath Interconnect link. Refer to Chapter 7 for more details of how this register is used in the MMIO decoding. Setting GMMIOL.BASE greater than GMMIOL.LIMIT disables global MMIOL peer-to-peer. This register is programmed once at boot time and does not change after that, including any quiesce flows.
7:0	RV	0h	*Reserved*

21.6.5.27 GMMIOH.BASE: Global MMIOH Base

Register: GMMIOH.BASE Device: 20 Function: 0 Offset: 128h			
Bit	**Attr**	**Default**	**Description**
15:10	RW	0h	**Global MMIOH Base Address** Corresponds to A[31:26] of global MMIOH base. An inbound or outbound memory address that satisfies 'global MMIOH base upper[31:0]::global MMIOH base[15:10] <= A[63:26] <= global MMIOH limit upper[31:0]::global MMIOH limit[15:10]' but is outside of the local MMIOH range is treated as a remote peer-to-peer transaction over Intel QuickPath Interconnect link. Refer to Chapter 7 for more details of how this register is used in the MMIO decoding. Setting GMMIOH.BASEU::GMMIOH.BASE greater than GMMIOH.LIMITU::GMMIOH.LIMIT disables global MMIOH peer-to-peer. This register is programmed once at boot time and does not change after that, including any quiesce flows.
9:0	RV	0h	Reserved

21.6.5.28 GMMIOH.LIMIT: Global MMIOH Limit

Register: GMMIOH.LIMIT Device: 20 Function: 0 Offset: 12Ah			
Bit	**Attr**	**Default**	**Description**
15:10	RW	0h	**Global MMIOH Limit Address** Corresponds to A[31:26] of global MMIOH limit. An inbound or outbound memory address that satisfies 'global MMIOH base upper[31:0]::global MMIOH base[15:10] <= A[63:26] <= global MMIOH limit upper[31:0]::global MMIOH limit[15:10]' but is outside of the local MMIOH range is treated as a remote peer-to-peer transaction over Intel® QuickPath Interconnect link. Refer to Chapter 7 for more details of how this register is used in the MMIO decoding. Setting GMMIOH.BASEU::GMMIOH.BASE greater than GMMIOH.LIMITU::GMMIOH.LIMIT disables global MMIOH peer-to-peer. This register is programmed once at boot time and does not change after that, including any quiesce flows.
9:0	RV	0h	Reserved

21.6.5.29 GMMIOH.BASEU: Global MMIOH Base Upper

Register: GMMIOH.BASEU Device: 20 Function: 0 Offset: 12Ch			
Bit	**Attr**	**Default**	**Description**
31:19	RO	0h	**Correspond to address A[63:51] of the global MMIOH range and is always 0.**

Register: GMMIOH.BASEU Device: 20 Function: 0 Offset: 12Ch			
Bit	**Attr**	**Default**	**Description**
18:0	RW	0h	**Global MMIOH Base Upper Address** Corresponds to A[50:32] of global MMIOH base. An inbound or outbound memory address that satisfies 'global MMIOH base upper[31:0]::global MMIOH base[15:10] <= A[63:26] <= global MMIOH limit upper[31:0]::global MMIOH limit[15:10]' but is outside of the local MMIOH range is treated as a remote peer-to-peer transaction over Intel QuickPath Interconnect link. Refer to Chapter 7 for more details of how this register is used in the MMIO decoding. Setting GMMIOH.BASEU::GMMIOH.BASE greater than GMMIOH.LIMITU::GMMIOH.LIMIT disables global MMIOH peer-to-peer. This register is programmed once at boot time and does not change after that, including any quiesce flows.

21.6.5.30 GMMIOH.LIMITU: Global MMIOH Limit Upper

Register: GMMIOH.LIMITU Device: 20 Function: 0 Offset: 130h			
Bit	**Attr**	**Default**	**Description**
31:19	RO	0h	**Correspond to address A[63:51] of the global MMIOH range and is always 0.**
18:0	RW	0h	**Global MMIOH Limit Upper Address** Corresponds to A[51:32] of global MMIOH limit. An inbound or outbound memory address that satisfies 'global MMIOH base upper[31:0]::global MMIOH base[15:10] <= A[63:26] <= global MMIOH limit upper[31:0]::global MMIOH limit[15:10]' but is outside of the local MMIOH range is treated as a remote peer-to-peer transaction over Intel QuickPath Interconnect link. Refer to Chapter 7 for more details of how this register is used in the MMIO decoding. Setting GMMIOH.BASEU::GMMIOH.BASE greater than GMMIOH.LIMITU::GMMIOH.LIMIT disables global MMIOH peer-to-peer. This register is programmed once at boot time and does not change after that, including any quiesce flows.

21.6.5.31 GCFGBUS.BASE: Global Configuration Bus Number Base Register

Register: GCFGBUS.BASE Device: 20 Function: 0 Offset: 134h			
Bit	**Attr**	**Default**	**Description**
7:0	RW	0h	**Global Configuration Bus Number Base** Corresponds to base bus number of bus number range that spans all IOHs in a partition. An inbound or outbound configuration tx that satisfies 'Global Bus Number Base [7:0] <= Bus Number[7:0] <= Global Bus Number Limit [7:0]' but is outside of the local bus number range is treated as a remote peer-to-peer transaction over Intel QuickPath Interconnect link. Refer to Chapter 7 for more details of how this register is used in the configuration cycle decoding.

21.6.5.32 GCFGBUS.LIMIT: Global Configuration Bus Number Limit Register

Register: GCFGBUS.LIMIT Device: 20 Function: 0 Offset: 135h			
Bit	**Attr**	**Default**	**Description**
7:0	RW	FFh	**Global Configuration Bus Number Limit** Corresponds to limit bus number of bus number range allocated across all IOHs in the partition. An inbound or outbound configuration that satisfies 'Global Bus Number Base [7:0] <= Bus Number[7:0] <= Global Bus Number Limit [7:0]' but is outside of the low bus number range is treated as a remote peer-to-peer transaction over Intel QuickPath Interconnect link. Refer to Chapter 7 for more details of how this register is used in the configuration cycle decoding. This register is programmed once at boot time and does not change after that, including any quiesce flows.

21.6.5.33 VTBAR: Base Address Register for Intel VT-d Chipset Registers

Register: VTBAR Device: 20 Function: 0 Offset: 180h			
Bit	**Attr**	**Default**	**Description**
31:13	RWL	0	**Intel VT-d Chipset Base Address:** Provides an aligned 8K base address for IOH registers relating to Intel VT-d. All inbound accesses to this region are completer aborted by the IOH. This register is programmed once at boot time and does not change after that, including any quiesce flows.
12:1	RV	0	Reserved
0	RWL	0	Intel VT-d Chipset Base Address Enable: Enables the VTBAR register. This bit is RO if "Intel VT-d enable fuse" is OFF

21.6.5.34 VTGENCTRL: Intel VT-d General Control Register

Register: VTGENCTRL Device: 20 Function: 0 Offset: 184h			
Bit	**Attr**	**Default**	**Description**
15:11	RV	0	Reserved
10:8	RV	111	Reserved

Register: VTGENCTRL Device: 20 Function: 0 Offset: 184h			
Bit	**Attr**	**Default**	**Description**
7:4	RWL	0011	**Non-Isoch HPA_LIMIT:** Represents the host processor addressing limit 0000: 2^36 (that is, bits 35:0) 0001: 2^37 (that is, bits 36:0) 0010:2^38 0011:2^39 0100:2^40 ... 1111: 2^51 (that is, bits 50:0) When Intel VT-d translation is enabled on an Intel VT-d engine (non-isoch), all host addresses (during page walks) that go beyond the limit specified in this register will be aborted by IOH. Note that pass-through and 'translated' ATS accesses carry the host-address directly in the access and are subject to this check as well. When Intel VT-d translation is enabled or disabled on a Intel VT-d engine (isoch or non-isoch), all host addresses (during page walks) that go beyond the limit specified in this register will be aborted by the IOH. Note that pass-through and 'translated' ATS accesses carry the host-address directly in the access and are subject to this check as well. Note for Error logging due to HPA limits check violations: When Intel VT-d translation is enabled, HPA limit check violations from the following requests will not be logged in the error register. 1. Translated request(AT=10) 2. Pass-through untranslated request. When Intel VT-d translation is disabled, HPA limit violations from untranslated request will be logged in the IOHERRST register when the HPA limit is set to 2^36. HPA limit check violation with other HPA limit settings will not be logged.
3:0	RWL	8h	**Non-Isoch GPA_LIMIT:** Represents the guest virtual addressing limit for the non-Isoch Intel VT-d engine. 0000: 2^40 (that is, bits 39:0) 0001: 2^41 (that is, bits 40:0) .. 0111: 2^47 1000: 2^48 1001-1111: Reserved When Intel VT-d translation is enabled, all incoming guest addresses from PCI Express, associated with the non-isoch Intel VT-d engine, that go beyond the limit specified in this register will be aborted by IOH and a UR response returned. This register is not used when translation is not enabled. Note that 'translated' and 'pass-through' addresses are in the 'host-addressing' domain and NOT 'guest-addressing' domain and hence GPA_LIMIT checking on those accesses are bypassed and instead HPA_LIMIT checking applies.

21.6.5.35 VTGENCTRL2: Intel VT-d General Control 2 Register

Register: VTGENCTRL2
Device: 20
Function: 0
Offset: 18Ch

Bit	Attr	Default	Description
31:11	RV	0	Reserved
10:7	RWL	Fh	LRU Timer
6:5	RWL	0	**Prefetch Control:** Queued invalidation, interrupt table read, context table reads and root table reads NEVER have prefetch/snarf/reuse capability. This is a general rule. Beyond that the Prefetch Control bits control additional behavior as shown below. Prefetch Control: This field controls which VT-d reads are to be considered for prefetch/snarf/reuse in the CSI buffers. 00 -> Prefetch/snarf/reuse is turned off. i.e. CSI cluster never reuses the VT-d read data. 01 -> Prefetch/snarf/reuse is enabled for all leaf/non-leaf VT-d page walk reads. 10 -> Reserved. 11 -> Prefetch/snarf/resue is enabled on all leaf (not non-leaf) VT-d page walk reads regardless of the setting of the CC.ALH bit.
4:0	RV	0	Reserved

21.6.5.36 VTSTS: Intel VT-d Status Register

Register: VTSTS
Device: 20
Function: 0
Offset: 190h

Bit	Attr	Default	Description
31:2	RV	0	Reserved
1	RW1CS	0	**Interrupt transaction seen on VC1/VCp**
0	RW1CS	0	**ATS command detected toward ESI port**

21.6.5.37 VTUNCERRSTS - VT Uncorrectable Error Status Register

Register: VTUNCERRSTS
Device: 20
Function: 0
Offset: 1A8h

Bit	Attr	Default	Description
31	RW1CST	0	**Intel VT-d spec defined errors:** When set, this bit is set when a Intel VT-d spec defined error has been detected (and logged in the Intel VT-d fault registers)
30:9	RV	0	Reserved
8	RW1CST	0	**Protected memory region space violated status**
7	RV	0	Reserved
6	RW1CST	0	**Unsuccessful status received in Intel QPI read completion status**
5	RW1CST	0	**TLB1 parity error status**

Register: VTUNCERRSTS Device: 20 Function: 0 Offset: 1A8h			
Bit	**Attr**	**Default**	**Description**
4	RW1CST	0	**TLB0 parity error status**
3	RW1CST	0	**Data parity error while doing a L3 lookup status**
2	RW1CST	0	**Data parity error while doing a L2 lookup status**
1	RW1CST	0	**Data parity error while doing a L1 lookup status**
0	RW1CST	0	**Intel VT-Data parity error while doing a context cache look up status**

21.6.5.38 VTUNCERRMSK - VT Uncorrectable Error Mask Register

Register: VTUNCERRMSK Device: 20 Function: 0 Offset: 1ACh			
Bit	**Attr**	**Default**	**Description**
31	RWS	0	**Mask reporting VT-d defined errors to IOH core logic**
30:9	RV	0	Reserved
8	RWS	0	**Protected memory region space violated mask**
7	RV	0	Reserved
6	RWS	0	**Unsuccessful status received in Intel QPI read completion mask**
5	RWS	0	**TLB1 parity error mask**
4	RWS	0	**TLB0 parity error mask**
3	RWS	0	**Data parity error while doing a L3 lookup mask**
2	RWS	0	**Data parity error while doing a L2 lookup mask**
1	RWS	0	**Data parity error while doing a L1 lookup mask**
0	RWS	0	**Data parity error while doing a context cache look up mask**

21.6.5.39 VTUNCERRSEV - VT Uncorrectable Error Severity Register

Register: VTUNCERRSEV Device: 20 Function: 0 Offset: 1B0h			
Bit	**Attr**	**Default**	**Description**
31	RWS	0	**Intel VT-d spec defined error severity:** When set, this bit escalates reporting of VT-d spec defined errors, as FATAL errors. When clear, those errors are escalated as Nonfatal errors.
30:9	RV	0	Reserved
8	RWS	1	**Protected memory region space violated severity**
7	RV	0	Reserved
6	RWS	0	**Unsuccessful status received in Intel QuickPath Interconnect read completion severity**
5	RWS	1	**TLB1 parity error severity**

Register: VTUNCERRSEV Device: 20 Function: 0 Offset: 1B0h			
Bit	**Attr**	**Default**	**Description**
4	RWS	1	**TLB0 parity error severity**
3	RWS	1	**Data parity error while doing a L3 lookup severity**
2	RWS	1	**Data parity error while doing a L2 lookup severity**
1	RWS	1	**Data parity error while doing a L1 lookup severity**
0	RWS	1	**Data parity error while doing a context cache look up severity**

21.6.5.40 VTUNCERRPTR - VT Uncorrectable Error Pointer Register

Register: VTUNCERRPTR Device: 20 Function: 0 Offset: 1B4h			
Bit	**Attr**	**Default**	**Description**
7:5	RV	0	Reserved
4:0	ROS	0	**Intel VT Uncorrectable First Error Pointer** This field points to which of the unmasked uncorrectable errors happened first. This field is only valid when the corresponding error is unmasked and the status bit is set and this field is rearmed to load again when the status bit indicated to by this pointer is cleared by software from 1 to 0. Value of 0x0 corresponds to bit 0 in VTUNCERRSTS register, value of 0x1 corresponds to bit 1 etc.

21.6.6 Semaphore and Scratch Pad Registers (Dev20, Function 1)

Table 21-9. Semaphore and Scratch pad Registers (Dev 20, Function 1)

DID	VID		000h	SR[1]	080h
PCISTS	PCICMD		004h	SR[2]	084h
CCR		RID	008h	SR[3]	088h
	HDR	CLS	00Ch	SR[4]	08Ch
			010h	SR[5]	090h
			014h	SR[6]	094h
			018h	SR[7]	098h
			01Ch	SR[8]	09Ch
			020h	SR[9]	0A0h
			024h	SR[10]	0A4h
			028h	SR[11]	0A8h
SID	SVID		02Ch	SR[12]	0ACh
			030h	SR[13]	0B0h
		CAPPTR[1]	034h	SR[14]	0B4h
			038h	SR[15]	0B8h
	INTP	INTL	03Ch	SR[16]	0BCh
EXPCAP	NXTPTR	CAPID	040h	SR[17]	0C0h
DEVCAP			044h		0C4h
DEVSTS	DEVCON		048h		0C8h
RESERVED PCIe Header space			04Ch		0CCh
			050h		0D0h
			054h		0D4h
			058h		0D8h
			05Ch	CWR[0]	0DCh
			060h	CWR[1]	0E0h
			064h	CWR[2]	0E4h
			068h	CWR[3]	0E8h
			06Ch	CWR[4]	0ECh
			070h	CWR[5]	0F0h
			074h	CWR[6]	0F4h
			078h	CWR[7]	0F8h
SR[0]			07Ch	CWR[8]	0FCh

Notes:

1. CAPPTR points to the first capability block

RESERVED PCIe Header space	100h	IR[16]	180h
CWR[9]	104h	IR[17]	184h
CWR[10]	108h		188h
CWR[11]	10Ch		18Ch
CWR[12]	110h		190h
CWR[13]	114h		194h
CWR[14]	118h		198h
CWR[15]	11Ch		19Ch
CWR[16]	120h		1A0h
CWR[17]	124h		1A4h
	128h		1A8h
	12Ch		1ACh
	130h		1B0h
	134h		1B4h
	138h		1B8h
	13Ch		1BCh
IR[0]	140h		1C0h
IR[1]	144h		1C4h
IR[2]	148h		1C8h
IR[3]	14Ch		1CCh
IR[4]	150h		1D0h
IR[5]	154h		1D4h
IR[6]	158h		1D8h
IR[7]	15Ch		1DCh
IR[8]	160h		1E0h
IR[9]	164h		1E4h
IR[10]	168h		1E8h
IR[11]	16Ch		1ECh
IR[12]	170h		1F0h
IR[13]	174h		1F4h
IR[14]	178h		1F8h
IR[15]	17Ch		1FCh

21.6.6.1 SR[0:3]: Scratch Pad Register 0-3 (Sticky)

Register: SR[4:7]
Device: 20
Function: 1
Offset: 07Ch-088h

Bit	Attr	Default	Description
31:0	RWLBS	0h	**Scratch Pad – Sticky** Sticky scratch pad registers for firmware utilization

21.6.6.2 SR[4:7]: Scratch Pad Register 4-7 (Sticky)

Register: SR[4:7]
Device: 20
Function: 1
Offset: 08Ch-098h

Bit	Attr	Default	Description
31:0	RWSLB	0h	**Scratch Pad – Sticky** Sticky scratch pad registers for firmware utilization

21.6.6.3 SR[8:11]: Scratch Pad Register 8-11 (Non-Sticky)

Register: SR[8:11]
Device: 20
Function: 1
Offset: 09Ch-0A8h

Bit	Attr	Default	Description
31:0	RWLB	0h	**Scratch Pad – Non-Sticky** Non-sticky scratch pad registers for firmware utilization

21.6.6.4 SR[12:15]: Scratch Pad Register 12-15 (Non-Sticky)

Register: SR[12:15]
Device: 20
Function: 1
Offset: 0ACh-0B8h

Bit	Attr	Default	Description
31:0	RWLB	0h	**Scratch Pad – Non-Sticky** Non-sticky scratch pad registers for firmware utilization

21.6.6.5 SR[16:17]: Scratch Pad Register 16-17 (Non-Sticky)

Register: SR[16:17]
Device: 20
Function: 1
Offset: 0BCh-0C0h

Bit	Attr	Default	Description
31:0	RWLB	0h	**Scratch Pad – Non-Sticky** Non-sticky scratch pad registers for firmware utilization

21.6.6.6 CWR[0:3]: Conditional Write Registers 0-3

Register: CWR[0:3] Device: 20 Function: 1 Offset: 0DCh-0E8h			
Bit	**Attr**	**Default**	**Description**
31:0	RWLBS	0	**Conditional Write** These registers are physically mapped to scratch pad registers. A read from CWR[n] reads SR[n]. A write to CWR[n] writes SR[n] if SR[n][0] = 0 before the write, and has no effect otherwise. The registers provide firmware with synchronization variables (semaphores) that are overloaded onto the same physical registers as SR.

21.6.6.7 CWR[4:7]: Conditional Write Registers 4-7

Register: CWR[4:7] Device: 20 Function: 1 Offset: 0ECh-0F8h			
Bit	**Attr**	**Default**	**Description**
31:0	RWLBS	0	**Conditional Write** These registers are physically mapped to scratch pad registers. A read from CWR[n] reads SR[n]. A write to CWR[n] writes SR[n] if SR[n][0] = 0 before the write, and has no effect otherwise. The registers provide firmware with synchronization variables (semaphores) that are overloaded onto the same physical registers as SR.

21.6.6.8 CWR[8:11]: Conditional Write Registers 8-11

Register: CWR[8:11] Device: 20 Function: 1 Offset: 0FCh-10Ch			
Bit	**Attr**	**Default**	**Description**
31:0	RWLB	0	**Conditional Write** These registers are physically mapped to scratch pad registers. A read from CWR[n] reads SR[n]. A write to CWR[n] writes SR[n] if SR[n][0] = 0 before the write, and has no effect otherwise. The registers provide firmware with synchronization variables (semaphores) that are overloaded onto the same physical registers as SR.

21.6.6.9 CWR[12:15]: Conditional Write Registers 12-15

Register: CWR[12:15] Device: 20 Function: 1 Offset: 110h-11Ch			
Bit	**Attr**	**Default**	**Description**
31:0	RWLB	0	**Conditional Write** These registers are physically mapped to scratch pad registers. A read from CWR[n] reads SR[n]. A write to CWR[n] writes SR[n] if SR[n][0] = 0 before the write, and has no effect otherwise. The registers provide firmware with synchronization variables (semaphores) that are overloaded onto the same physical registers as SR.

21.6.6.10 CWR[16:17]: Conditional Write Registers 16-17

Register: CWR[16:17] Device: 20 Function: 1 Offset: 120h-124h			
Bit	**Attr**	**Default**	**Description**
31:0	RWLB	0h	**Conditional Write** These registers are physically mapped to scratch pad registers. A read from CWR[n] reads SR[n]. A write to CWR[n] writes SR[n] if SR[n][0] = 0 before the write, and has no effect otherwise. The registers provide firmware with synchronization variables (semaphores) that are overloaded onto the same physical registers as SR.

21.6.6.11 IR[0:3]: Increment Registers 0-3

Register: IR[0:3] Device: 20 Function: 1 Offset: 140h-14Ch			
Bit	**Attr**	**Default**	**Description**
31:0	RWLBS	0	**Increment** These registers are physically mapped to scratch pad registers. A read from IR[n] reads SR[n] and then increments SR[n]. A write to IR[n] increments SR[n] while the write data is unused. Increments within SR[n] for reads and writes roll over to zero. The read or write and the increment side effect are atomic with respect to other accesses. The registers provide firmware with synchronization variables (semaphores) that are overloaded onto the same physical registers as SR.

21.6.6.12 IR[4:7]: Increment Registers 4-7

Register: IR[4:7]
Device: 20
Function: 1
Offset: 150h-15Ch

Bit	Attr	Default	Description
31:0	RWLBS	0	**Increment** These registers are physically mapped to scratch pad registers. A read from IR[n] reads SR[n] and then increments SR[n]. A write to IR[n] increments SR[n] while the write data is unused. Increments within SR[n] for reads and writes roll over to zero. The read or write and the increment side effect are atomic with respect to other accesses. The registers provide firmware with synchronization variables (semaphores) that are overloaded onto the same physical registers as SR.

21.6.6.13 IR[8:11]: Increment Registers 8-11

Register: IR[8:11]
Device: 20
Function: 1
Offset: 160h-16Ch by 4

Bit	Attr	Default	Description
31:0	RWLB	0	**Increment** These registers are physically mapped to scratch pad registers. A read from IR[n] reads SR[n] and then increments SR[n]. A write to IR[n] increments SR[n] while the write data is unused. Increments within SR[n] for reads and writes roll over to zero. The read or write and the increment side effect are atomic with respect to other accesses. The registers provide firmware with synchronization variables (semaphores) that are overloaded onto the same physical registers as SR.

21.6.6.14 IR[12:15]: Increment Registers 12-15

Register: IR[12:15]
Device: 20
Function: 1
Offset: 170h-17Ch by 4

Bit	Attr	Default	Description
31:0	RWLB	0	**Increment** These registers are physically mapped to scratch pad registers. A read from IR[n] reads SR[n] and then increments SR[n]. A write to IR[n] increments SR[n] while the write data is unused. Increments within SR[n] for reads and writes roll over to zero. The read or write and the increment side effect are atomic with respect to other accesses. The registers provide firmware with synchronization variables (semaphores) that are overloaded onto the same physical registers as SR.

21.6.6.15 IR[16:17]: Increment Registers 16-17

Register: IR[16:17] Device: 20 Function: 1 Offset: 180h-184h by 4			
Bit	**Attr**	**Default**	**Description**
31:0	RWLB	0h	**Increment** These registers are physically mapped to scratch pad registers. A read from IR[n] reads SR[n] and then increments SR[n]. A write to IR[n] increments SR[n] while the write data is unused. Increments within SR[n] for reads and writes roll over to zero. The read or write and the increment side effect are atomic with respect to other accesses. The registers provide firmware with synchronization variables (semaphores) that are overloaded onto the same physical registers as SR.

21.6.7 IOH System/Control Status Registers

Table 21-10. IOH Control/Status & Global Error Register Map (Dev 20, Function 2, Page 1 of 4)

DID	VID		000h	QPIERRSV		080h
PCISTS	PCICMD		004h	QPIPERRSV		084h
CCR		RID	008h			088h
	HDR	CLS	00Ch	IOHERRSV		08Ch
			010h			090h
			014h	PCIERRSV		094h
			018h	THRERRSV		098h
			01Ch	SYSMAP		09Ch
			020h	VIRAL		0A0h
			024h	ERRPINCTL		0A4h
			028h	ERRPINST		0A8h
SID	SVID		02Ch	ERRPINDAT		0ACh
			030h	VPPCTL		0B0h
		CAPPTR[1]	034h			0B4h
			038h	VPPSTS		0B8h
	INTP	INTL	03Ch			0BCh
EXPCAP	NXTPTR	CAPID	040h	PRSTRDY		0C0h
DEVCAP			044h	GENMCA		0C4h
DEVSTS	DEVCON		048h	GENVIRAL		0C8h
RESERVED PCIe Header space			04Ch	SYRE		0CCh
			050h	FREQ		0D0h
			054h			0D4h
			058h			0D8h
			05Ch			0DCh
			060h			0E0h
			064h			0E4h
			068h	CAPTIM		0E8h
			06Ch			0ECh
			070h			0F0h
			074h			0F4h
			078h			0F8h
			07Ch		EOI_CTRL	0FCh

Notes:

1. CAPPTR points to the first capability block

Table 21-11. IOH Control/Status & Global Error Register Map (Dev 20, Function 2, Page 2 of 4)

RESERVED PCIe Header space	100h		180h
	104h		184h
	108h		188h
	10Ch		18Ch
	110h		190h
	114h		194h
	118h		198h
	11Ch		19Ch
	120h		1A0h
	124h		1A4h
	128h		1A8h
	12Ch		1ACh
	130h		1B0h
	134h		1B4h
	138h		1B8h
	13Ch		1BCh
	140h	GNERRST	1C0h
	144h	GFERRST	1C4h
	148h	GERRCTL	1C8h
	14Ch	GSYSST	1CCh
	150h	GSYSCTL	1D0h
	154h	GTIME	1D4h
	158h		1D8h
	15Ch	GFFERRST	1DCh
	160h	GFFERRTIME	1E0h
	164h		1E4h
	168h	GFNERRST	1E8h
	16Ch	GNFERRST	1ECh
	170h	GNFERRTIME	1F0h
	174h		1F4h
	178h	GNNERRST	1F8h
	17Ch		1FCh

Table 21-12. IOH Local Error Map #1 (Dev 20, Function 2, Page 3 of 4)

QPI0ERRST	200h		280h
QPI0ERRCTL	204h		284h
QPI0FFERRST	208h		288h
QPI0FNERRST	20Ch		28Ch
QPI0NFERRST	210h		290h
QPI0NNERRST	214h		294h
QPI0ERRCNTSEL	218h		298h
QPI0ERRCNT	21Ch		29Ch
	220h		2A0h
	224h		2A4h
	228h		2A8h
	22Ch		2ACh
QPIP0ERRST	230h		2B0h
QPIP0ERRCTL	234h		2B4h
QPIP0FFERRST	238h		2B8h
QPIP0FNERRST	23Ch		2BCh
QPIP0FFERRHD	240h		2C0h
	244h		2C4h
	248h		2C8h
	24Ch		2CCh
QPIP0NFERRST	250h		2D0h
QPIP0NNERRST	254h		2D4h
QPIP0NFERRHD	258h		2D8h
	25Ch		2DCh
	260h		2E0h
	264h		2E4h
QPIP0ERRCNTSEL	268h		2E8h
QPIP0ERRCNT	26Ch		2ECh
	270h		2F0h
	274h		2F4h
	278h		2F8h
	27Ch		2FCh

Table 21-13. IOH Local Error Map #2 (Dev 20, Function 2, Page 4 of 4)

IOHERRST	300h		380h
IOHERRCTL	304h		384h
IOHFFERRST	308h		388h
IOHFFERRHD	30Ch		38Ch
	310h		390h
	314h		394h
	318h		398h
IOHFNERRST	31Ch		39Ch
IOHNFERRST	320h		3A0h
IOHNFERRHD	324h		3A4h
	328h		3A8h
	32Ch		3ACh
	330h		3B0h
IOHNNERRST	334h		3B4h
	338h		3B8h
IOHERRCNTSEL	33Ch		3BCh
IOHERRCNT	340h		3C0h
	344h		3C4h
	348h		3C8h
	34Ch		3CCh
	350h		3D0h
	354h		3D4h
	358h		3D8h
	35Ch		3DCh
THRERRST	360h		3E0h
THRERRCTL	364h		3E4h
THRFFERRST	368h		3E8h
THRFNERRST	36Ch		3ECh
THRNFERRST	370h		3F0h
THRNNERRST	374h		3F4h
THRERRCNTSEL	378h		3F8h
THRERRCNT	37Ch		3FCh

21.6.7.1 QPIERRSV: Intel QuickPath Interconnect Link/Physical Error Severity Register

This register associates the detected Intel QPI Link and Physical Layer errors to an error severity level. An individual error is reported with the corresponding severity in this register. Software can program the error severity to one of the three severities supported by IOH. This register is sticky and can only be reset by PWRGOOD. The default error severity mapping is defined in Table 16-2.

Register: QPIERRSV
Device: 20
Function: 2
Offset: 080h

Bit	Attr	Default	Description
31:26	RV	0	*Reserved*
25:24	RWS	10	**D4 - Intel QuickPath Interconnect Link Internal Parity Error** This field determines the error severity for the corresponding Severity error. Two-bit encoding as follows: 00: Error Severity Level 0 (Correctable) 01: Error Severity Level 1 (Recoverable) 10: Error Severity Level 2 (Fatal) 11: Reserved
23:22	RWS	10	**D3 - Intel QPI Link Layer Control Error**
21:20	RWS	10	**C0 - Intel QPI Link Layer detected CRC error** - unsuccessful link level retry - entered LLR abort state See QPI[1:0]FERRFLIT0 and QPI[1:0]FERRFLIT1 for flit info.
19:18	RWS	00	**B1 - Intel QPI Link Layer detected CRC error** - successful link level retry after PHY reinit
17:16	RWS	00	**B0 -Intel QPI Link Layer CRC - successful link level retry**
15:14	RWS	10	**DG - Intel QPI Link Layer Detected unsupported/undefined** msgclass/opcode/vn packet Error
13:12	RWS	00	**B5 -** Potential Spurious CRC error on L0s/L1 Exit
11:10	RWS	00	**B6 - Intel QPI Link Layer CRC error**
9:8	RWS	10	**D2 - Intel QPI Physical Layer Initialization Failure**
7:6	RWS	10	**D1 - Intel QPI Physical Layer Detected Latency Buffer Rollover**
5:4	RWS	10	**D0 - Intel QuickPath Interconnect Physical Layer Detected Drift Buffer Alarm**
3:2	RWS	01	**C7 - Intel QPI Physical Layer Reset Successful with Reduced Width**
1:0	RWS	00	**B2 - Intel QPI Physical Layer Successful Reset at same Width**

21.6.7.2 QPIPERRSV: Intel QuickPath Interconnect Protocol Error Severity Register

This register associates the detected Intel QuickPath Interconnect Protocol and Routing layer errors to an error severity level. An individual error is reported with the corresponding severity in this register. Software can program the error severity to one of the three severities supported by IOH. This register is sticky and can only be reset by PWRGOOD. The default error severity mapping is defined in Table 16-2.

Register: QPIPERRSV
Device: 20
Function: 2
Offset: 084h

Bit	Attr	Default	Description
63:40	RV	0	*Reserved*
39:38	RWS	10	**DH** - Intel QPI Protocol Layer Detected unsupported/undefined packet Error This field determines the error severity for the corresponding Severity error. Two-bit encoding as follows: 00: Error Severity Level 0 (Correctable) 01: Error Severity Level 1 (Recoverable) 10: Error Severity Level 2 (Fatal) 11: Reserved
37:36	RWS	10	**DF - Illegal Inbound Request**
35:34	RWS	10	**DE - Routing Table Invalid**
33:32	RV	0	*Reserved*
31:30	RWS	10	**DC - Protocol SAD illegal or non-existent memory for outbound snoop**
29:28	RWS	10	**DB - Protocol Parity Error**
27:26	RWS	10	**DA - Protocol Queue/Table Overflow or Underflow**
25:24	RWS	10	**D9 - Protocol Layer Received Viral from Intel QPI**
23:22	RWS	10	**D8 - Protocol Layer Received Illegal packet field or Incorrect Target NodeID**
21:20	RWS	10	**D7 - Protocol Layer Received Unexpected Response/Completion**
19:18	RWS	10	**D6 - Protocol Layer Received Failed Response**
17:16	RWS	10	**D5 - Protocol Layer Detected Time-Out in ORB**
15:10	RV	0	*Reserved*
9:8	RWS	01	**C3 - CSR access crossing 32-bit boundary**
7:6	RWS	01	**C2 - Write Cache Un-correctable ECC**
5:4	RWS	01	**C1 - Protocol Layer Received Poisoned Packet.**
3:2	RWS	00	**B4 - Write Cache Correctable ECC**
1:0	RWS	00	**B3 - Intel QPI CPEI Error Status**

21.6.7.3 IOHERRSV: IOH Core Error Severity Register

This register associates the detected IOH internal core errors to an error severity level. An individual error is reported with the corresponding severity in this register. Software can program the error severity to one of the three severities supported by IOH. This register is sticky and can only be reset by PWRGOOD:

Register: IOHERRSV
Device: 20
Function: 2
Offset: 08Ch

Bit	Attr	Default	Description
31:14	RV	0h	Reserved
13:12	RWS	01	**C6 - FIFO Overflow/Underflow error** This field determines the error severity for the corresponding Severity error. Two-bit encoding as follows: 00: Error Severity Level 0 (Correctable) 01: Error Severity Level 1 (Recoverable) 10: Error Severity Level 2 (Fatal) 11:Reserved
11:10	RWS	01	**C5 -Completor abort address error** This field determines the error severity for the corresponding Severity error. Two-bit encoding as follows: 00: Error Severity Level 0 (Correctable) 01: Error Severity Level 1 (Recoverable) 10: Error Severity Level 2 (Fatal) 11:Reserved
9:8	RWS	01	**C4 -Master abort address error** This field determines the error severity for the corresponding Severity error. Two-bit encoding as follows: 00: Error Severity Level 0 (Correctable) 01: Error Severity Level 1 (Recoverable) 10: Error Severity Level 2 (Fatal) 11:Reserved
7:0	RV	0h	Reserved

21.6.7.4 MIERRSV: Miscellaneous Error Severity Register

This register associates the detected IOH miscellaneous errors to an error severity level. An individual error is reported with the corresponding severity in this register. Software can program the error severity to one of the three severities supported by IOH. This register is sticky and can only be reset by PWRGOOD:

Register: MIERRSV
Device: 20
Function: 2
Offset: 090h

Bit	Attr	Default	Description
31:6	RV	0h	Reserved

Register: MIERRSV Device: 20 Function: 2 Offset: 090h			
Bit	**Attr**	**Default**	**Description**
7:6	RWS	00	**23 - VPP Error Severity** Refer to bit [1:0] for description
5:4	RWS	00	**22 - Persistent JTAG Error Severity** Refer to bit[1:0] for description.
3:2	RWS	00	**21 - Persistent SMBus Retry Status Severity** Refer to bit[1:0] for description.
1:0	RWS	00	**20 - IOH Configuration Register Parity error Severity** This field determines the error severity for the corresponding Severity error. Two-bit encoding as follows: 00: Error Severity Level 0 (Correctable) 01: Error Severity Level 1 (Recoverable) 10: Error Severity Level 2 (Fatal) 11:Reserved

21.6.7.5 PCIERRSV: PCIe Error Severity Map Register

This register allows remapping of the PCIe errors to the IOH error severity.

Register: PCIERRSV Device: 20 Function: 2 Offset: 094h			
Bit	**Attr**	**Default**	**Description**
31:6	RV	0	Reserved
5:4	RWS	10	**PCIe Fatal Error Severity Map** 10: Map this PCIe error type to Error Severity 2 01: Map this PCIe error type to Error Severity 1 00: Map this PCIe error type to Error Severity 0
3:2	RWS	01	**PCIe Non-Fatal Error Severity Map** same encoding as above
1:0	RWS	00	**PCIe Correctable Error Severity Map** same encoding as above

21.6.7.6 THRERRSV: Thermal Error Severity Register

This register associates the detected thermal errors to an error severity level. An individual error is reported with the corresponding severity in this register. Software can program the error severity to one of the three severities supported by IOH. This register is sticky and can only be reset by PWRGOOD:

Register: THRERRSV
Device: 20
Function: 2
Offset: 098h

Bit	Attr	Default	Description
31:16	RV	0h	Reserved
15:12	RWS	0h	**F3 - Throttling History (most recent valid CTHINT.THROTTLED bit)** This field determines the error severity for the corresponding event. Four-bit encoding: xx00: Error Severity Level 0 (Correctable) xx01: Error Severity Level 1 (Recoverable) xx10: Error Severity Level 2 (Fatal) xx11: Reserved 00xx: Reserved 01xx: Send to the THERMALERT_N signal 10xx: Send to the THERMTRIP_N signal 11xx: Reserved
11:8	RWS	1000	**F2 - Catastrophic Thermal Event** This field determines the error severity for the corresponding event. Four-bit encoding: xx00: Error Severity Level 0 (Correctable) xx01: Error Severity Level 1 (Recoverable) xx10: Error Severity Level 2 (Fatal) xx11: Reserved 00xx: Reserved 01xx: Send to the THERMALERT_N signal 10xx: Send to the THERMTRIP_N signal 11xx: Reserved
7:4	RWS	0h	**F1 - TSMAX Updated** This field determines the error severity for the corresponding event. Four-bit encoding: xx00: Error Severity Level 0 (Correctable) xx01: Error Severity Level 1 (Recoverable) xx10: Error Severity Level 2 (Fatal) xx11: Reserved 00xx: Reserved 01xx: Send to the THERMALERT_N signal 10xx: Send to the THERMTRIP_N signal 11xx: Reserved
3:0	RWS	0100	**F0 - Thermal Alert** This field determines the error severity for the corresponding event. Four-bit encoding: xx00: Error Severity Level 0 (Correctable) xx01: Error Severity Level 1 (Recoverable) xx10: Error Severity Level 2 (Fatal) xx11: Reserved 00xx: Reserved 01xx: Send to the THERMALERT_N signal 10xx: Send to the THERMTRIP_N signal 11xx: Reserved

21.6.7.7 SYSMAP: System Error Event Map Register

This register maps the error severity detected by the IOH to the system events. When an error is detected by the IOH, its corresponding error severity determines which system event to generate according to this register.

Register: SYSMAP
Device: 20
Function: 2
Offset: 09Ch

Bit	Attr	Default	Description
31:16	RV	0	Reserved
15	RW1CS	0	**ERRFRZSTS: Error Freeze Status:** 0: Error Freeze was not invoked. 1: Error Freeze was invoked. Note: This register will capture the assertion of the error chip freeze signal, which is based on both an "*error signal*" and its respective "freeze component on *error signal*" enable both being asserted.
14:12	RW	0h	**ERRFRZ: Error Chip Freeze** This feature is OR'd with the signal that drives the Chip Freeze DFx signal. A chip freeze prohibits packets from entering or leaving the chip while maintaining protocol correctness. For effective use of this feature the system management software must assume that a measurable amount of time must pass before accessing the registers due to internal activity continuing for some time before coming to a halted state. 000: Do not freeze component. xx1: Freeze component on Error 0 Assertion (Correctable) x1x: Freeze component on Error 1 Assertion (Recoverable) 1xx: Freeze component on Error 2 Assertion (Fatal) After a freeze event occurs a SMBus software write with 0h will release the freeze condition. Since a reset may be required as a result of an error it may not be necessary to write a freeze release. Any combination of error select bits is possible, for example: A value of b110 enables chip freeze on any error that is not correctable. Note: When this Error Freeze signal is asserted, it has priority over the chip freeze start and stop selections. Chip freeze will remain on regardless of its start and stop, until ERRCHPFRZ returns to a '0' value.
11	RV	0	Reserved
10:8	RWS	000	**Severity 2 Error Map** 110: Generate MCA 101: Generate CPEI 010: Generate NMI 001 Generate SMI/PMI 000: No inband message
7	RV	0	Reserved
6:4	RWS	0	**Severity 1 Error Map** same encoding as above
3	RV	0	Reserved
2:0	RWS	0	**Severity 0 Error Map** same encoding as above

21.6.7.8 VIRAL: Viral Alert Register

This register provides the option to generate viral alert upon the detection of fatal error.

Register: VIRAL
Device: 20
Function: 2
Offset: 0A0h

Bit	Attr	Default	Description
31:3	RV	0	Reserved
2	RWS	0	Fatal Viral Alert Enable Enable viral alert for Fatal Error. 0 - Disable Viral Alert for error severity 2. 1 - IOH goes viral when error severity 2 is set in the system event status register.
1:0	RV	0	Reserved

21.6.7.9 ERRPINCTL: Error Pin Control Register

This register provides the option to configure an error pin to either as a special purpose error pin which is asserted based on the detected error severity, or as a general purpose output which is asserted based on the value in the ERRPINDAT. The assertion of the error pins can also be completely disabled by this register.

Register: ERRPINCTL
Device: 20
Function: 2
Offset: 0A4h

Bit	Attr	Default	Description
31:6	RV	0	Reserved
5:4	RWS	0	**Error[2] Pin Assertion Control** 11: Reserved. 10: Assert Error Pin when error severity 2 is set in the system event status reg. 01: Assert and Deassert Error pin according to error pin data register 00: Disable Error pin assertion
3:2	RWS	0	**Error[1] Pin Assertion Control** 11: Reserved. 10: Assert Error Pin when error severity 1 is set in the system event status reg. 01: Assert and Deassert Error pin according to error pin data register 00: Disable Error pin assertion
1:0	RWS	0	**Error[0] Pin Assertion Control** 11: Reserved. 10: Assert Error Pin when error severity 0 is set in the system event status reg. 01: Assert and Deassert Error pin according to error pin data register 00: Disable Error pin assertion

21.6.7.10 ERRPINST: Error Pin Status Register

This register reflects the state of the error pin assertion. The status bit of the corresponding error pin is set upon the deassertion to assertion transition of the error pin. This bit is cleared by the software with writing 1 to the corresponding bit.

Register: ERRPINST
Device: 20
Function: 2
Offset: 0A8h

Bit	Attr	Default	Description
31:3	RV	0	Reserved
2	RW1CS	0	**Error[2] Pin status** This bit is set upon the transition of deassertion to assertion of the Error pin. Software write 1 to clear the status.
1	RW1CS	0	**Error[1] Pin status**
0	RW1CS	0	**Error[0] Pin status**

21.6.7.11 ERRPINDAT: Error Pin Data Register

This register provides the data value when the error pin is configured as a general-purpose output.

Register: ERRPINDAT
Device: 20
Function: 2
Offset: 0ACh

Bit	Attr	Default	Description
31:3	RV	0	Reserved
2	RW	0	**Error[2] Pin Data** (applies when ERRPINCTL[5:4]=01; otherwise reserved) This bit acts as the general purpose output for the Error[2] pin. Error [2] pin value will follow the value programmed in Error[2] Pin Data register. This bit applies only when ERRPINCTL[5:4]=01; otherwise it is reserved. 0 - Deassert Error[2] pin 1 - Assert Error[2] pin This value only applies to the pin when ERRPINCTL[5:4]=01
1	RW	0	**Error[1] Pin Data** (applies when ERRPINCTL[3:2]=01; otherwise reserved)
0	RW	0	**Error[0] Pin Data** (applies when ERRPINCTL[1:0]=01; otherwise reserved)

21.6.7.12 VPPCTL: VPP Control

This register defines the control/command for PCA9555.

Register: VPPCTL
Device: 20
Function: 2
Offset: 0B0h

Bit	Attr	Default	Description
63:56	RV	0	Reserved
55	RWS	0	**VPP Reset Mode:** 0: Power good reset will reset the VPP state machines and hard reset will cause the VPP state machine to terminate at the next 'logical' VPP stream boundary and then reset the VPP state machines 1: Both power good and hard reset will reset the VPP state machines
54:44	RWS	0	**VPP Enable:** When set, the VPP function for the corresponding root port is enabled. 54:44 - PCI[10:0]
43:0	RWS	0	**VPP Address** Assigns the VPP address of the device on the VPP interface and assigns the port address for the ports within the VPP device. There are more address bits then root ports so assignment must be spread across VPP ports. Addr Port Number Root Port [43:41] [40] PCIE[10] [39:37] [36] PCIE[9] [35:33] [32] PCIE[8] [31:29] [28] PCIE[7] [27:25] [24] PCIE[6] [23:21] [20] PCIE[5] [19:17] [16] PCIE[4] [15:13] [12] PCIE[3] [11:9] [8] PCIE[2] [7:5] [4] PCIE[1] [3:1] [0] PCIE[0]

21.6.7.13 VPPSTS: VPP Status Register

This register defines the status from PCA9555.

Register: VPPSTS
Device: 20
Function: 2
Offset: 0B8h

Bit	Attr	Default	Description
31:1	RV	0	Reserved
0	RW1CS	00	**VPP Port Error Happened** That is, an unexpected STOP of NACK was seen on the VPP port

21.6.7.14 PRSTRDY: Reset Release Ready

This register is used to indicate to BMC that IOH has received CPU_RST_DONE_ACK from the ICH, and that BMC can release the reset. Note: This register applies only to the legacy IOH where an ICH is connected. For non-legacy IOH, the corresponding bit in this register is always set to 0.

Register: PRSTRDY
Device: 20
Function: 2
Offset: 0C0h

Bit	Attr	Default	Description
31:1	RV	0	Reserved
0	RW1C	0	**Reset Release Ready** This bit indicates that IOH has received CPU_RST_DONE_ACK from the ICH and that BMC can release the reset. 0 - Keep reset asserted 1 - BMC release reset

21.6.7.15 GENMCA: Generate MCA Register

This register is used to generate MCA interrupt to CPU by firmware.

Register: GENMCA
Device: 20
Function: 2
Offset: 0C4h

Bit	Attr	Default	Description
31:1	RV	0	Reserved
0	RWS	0	**Generate MCA** When this bit is set and transition from 0 to 1, IOH dispatches a MCA interrupt defined in the QPIPMCAC register to the CPU. This bit is cleared by hardware when IOH has dispatched MCA to the Intel QuickPath Interconnect link.

21.6.7.16 GENVIRAL: Generate Viral

This register is used to generate Viral alert to CPU by firmware and clear Viral.

Register: GENVIRAL
Device: 20
Function: 2
Offset: 0C8h

Bit	Attr	Default	Description
31:4	RV	0	Reserved
3	RWO	0	**Viral_Clear_disable** When VIRAL_CLEAR_DISABLE = 1 – this will not allow the clearing of viral alert by setting VIRAL_CLEAR bit; - Eventually, the Viral Alert will be cleared once all the Fatal Error and VIRAL_status (RW1CS) is cleared by software. When VIRAL_CLEAR_DISABLE = 0 – this will clear the Viral alert generated in the system (Viral broadcast will be stopped) by setting the VIRAL_CLEAR bit – but still the VIRAL_STATUS will be set until software clears it.
2	RW	0	**Viral_Clear** This bit is active when VIRAL_CLEAR_DIS = 0; by setting this bit Viral alert generated in the system will be cleared.

Register: GENVIRAL Device: 20 Function: 2 Offset: 0C8h			
Bit	**Attr**	**Default**	**Description**
1	RW1CS	0	**Viral_Status** This bit is set when IOH is in viral mode.
0	RWS	0	**Generate Viral Alert** When this bit is set and transition from 0 to 1, IOH sets Intel QuickPath Interconnect cluster(s) to viral. This bit is cleared by hardware when IOH has set viral alert on Intel QPI cluster(s).

21.6.7.17 SYRE: System Reset

This register controls IOH reset behavior. Any resets produced by a write to this register must be delayed until the configuration write is completed on the PCIe/ESI, Intel QuickPath Interconnect, SMBUS, and JTAG interfaces.

There is no “SOFT RESET” bit in this register. That function is invoked through the ESI interface. There are no Intel QPI:PCI Express gear ratio definitions in this register. The Intel QuickPath Interconnect frequencies are specified in the FREQ register. The PCI Express frequencies are automatically negotiated inband.

Register: SYRE Device: 20 Function: 2 Offset: 0CCh			
Bit	**Attr**	**Default**	**Description**
31:15	RV	0	Reserved
14	RV	0	**S5** 1 - Translate ESI.GO_S3 to QPI.SpcPMReq (S5) 0 - Forward ESI.GO_S3 to QPI.SpcPMReq(S3)
13:12	RV	0	Reserved
11	RW	0	**RSTMSK** 0 - the IOH will perform the appropriate internal handshakes on RST_N signal transitions to progress through the hard reset. 1 - IOH ignores RST_N, unaffected by the RST_N assertion
10	RW	0	**CPURESET** 1 - IOH asserts RESETO_N Once this bit has been set to initiate RESETO_N to the CPU, it will not clear itself. To initiate the second RESETO_N, software must write ‘0’ for manual clear then followed by a write ‘1’. This bit will not accept a ‘1’ written to it while LT.SENTER.STS is set. These behaviors are described in the RESET chapter.
9:1	RV	0	Reserved
0	RWS	1	**Enable CPU BIST** 1- Enable CPU BIST 0- Disable CPU BIST This bit controls whether or not BIST is run in the CPU on reset. It’s value will correspond to the BIST value in the POC exchanged from IOH on Intel QuickPath Interconnect. This value will only make a difference in CPU’s that observe POC (like Xeon). By default BIST is disabled. If BIST is desired, then after this bit is set the CPU must be reset to cause the CPU to capture the new value.

21.6.7.18 FREQ: Frequencies

This register defines the Intel® QuickPath Interconnect frequency. The QPIFREQSEL[1:0] straps determines the Intel® QuickPath Interconnect link:core frequency ratio. This FREQ register is read-only, and it indicates the PRESENT frequency of the links.

Note: This register is sticky. The frequency bits and can only be latched in at PWRGOOD.

Register: FREQ
Device: 20
Function: 2
Offset: 0D0h

Bit	Attr	Default	Description
31:2	RV	0h	Reserved
1:0	RO	STRAP: QPIFREQSEL	**QPIFREQSEL: Intel QPI High Frequency** "00" = 4.800 GT/s "01" = 5.860 GT/s (Intel Xeon processor 7500 series only) "10" = 6.400 GT/s "11" = *Reserved* This is the value of the QPIFREQSEL signals sampled at PWRGOOD.

21.6.7.19 CAPTIM: Cap Timer

This register sets the cap timer count value.

Register: CAPTIM
Device: 20
Function: 2
Offset: 0E8h

Bit	Attr	Default	Description
31:14	RV	0	Reserved
13:0	RWS	7FFh	CAPTIM: Cap Timer Value Cap timer value. When enabled, a detected outbound ESI transaction will start the timer. The returning read data completion is held in the core until the expiration of the counter. After the transaction is released the counter is re-loaded with this count value (or cleared depending on implementation). The counter is free-running until the CAPTIMEN bit is cleared.

21.6.7.20 EOI_CTRL: Global EOI Control Register

Register: EOI_CTRL
Device: 20
Function: 2
Offset: FCh

Bit	Attr	Default	Description
7:1	RV	00h	*Reserved.*
0	RW	0	Drop_EOI: 0: EOI messages from Intel QuickPath Interconnect are broadcasted to root/ESI ports and IOxAPIC per the normal rules for EOI broadcast. 1: EOI messages from Intel® QPI are simply dropped and not broadcast to root/ESI ports or the integrated IOxAPIC

21.7 Global Error Registers

Table 21-14. IOH Control/Status & Global Error Register Map (Dev 20, Function 2)

RESERVED PCIe Header space	100h		180h
	104h		184h
	108h		188h
	10Ch		18Ch
	110h		190h
	114h		194h
	118h		198h
	11Ch		19Ch
	120h		1A0h
	124h		1A4h
	128h		1A8h
	12Ch		1ACh
	130h		1B0h
	134h		1B4h
	138h		1B8h
	13Ch		1BCh
	140h	GNERRST	1C0h
	144h	GFERRST	1C4h
	148h	GERRCTL	1C8h
	14Ch	GSYSST	1CCh
	150h	GSYSCTL	1D0h
	154h	GTIME	1D4h
	158h		1D8h
	15Ch	GFFERRST	1DCh
	160h	GFFERRTIME	1E0h
	164h		1E4h
	168h	GFNERRST	1E8h
	16Ch	GNFERRST	1ECh
	170h	GNFERRTIME	1F0h
	174h		1F4h
	178h	GNNERRST	1F8h
	17Ch		1FCh

21.7.1 Global Error Registers

21.7.1.1 GNERRST: Global Non-Fatal Error Status Register

This register indicates the status of non-fatal error reported to the IOH global error logic. An individual error status bit that is set indicates that a particular local interface has detected an error.

Register: GNERRST
Device: 20
Function: 2
Offset: 1C0h

Bit	Attr	Default	Description
31:26	RV	0	Reserved
25	RW1CS	0	Intel VT-d Error Status This bit indicates that IOH has detected an Intel VT-d related error.
24	RW1CS	0	Miscellaneous Error Status This bit indicates that IOH has detected a miscellaneous error.
23	RW1CS	0	IOH Core Error Status This bit indicates that IOH core has detected an error.
22	RV	0	Reserved
21	RW1CS	0	Thermal Error Status This bit indicates that IOH detected thermal error.
20	RW1CS	0	ESI Error Status This bit indicates that IOHESI port 0 has detected an error.
19:16	RV	0	Reserved
15	RW1CS	0	PCIe [10] Error Status PCIe port 10 has detected an error.
14	RW1CS	0	PCIe [9] Error Status PCIe port 9 has detected an error.
13	RW1CS	0	PCIe [8] Error Status PCIe port 8 has detected an error.
12	RW1CS	0	PCIe [7] Error Status PCIe port 7 has detected an error.
11	RW1CS	0	PCIe [6] Error Status PCIe port 6 has detected an error.
10	RW1CS	0	PCIe [5] Error Status PCIe port 5 has detected an error.
9	RW1CS	0	PCIe [4] Error Status PCIe port 4 has detected an error.
8	RW1CS	0	PCIe [3] Error Status PCIe port 3 has detected an error.
7	RW1CS	0	PCIe [2] Error Status PCIe port 2 has detected an error.
6	RW1CS	0	PCIe [1] Error Status PCIe port 1 has detected an error.
5	RW1CS	0	PCIe [0] Error Status PCIe port 0 has detected an error. PCIe[0] is associated with ESI.
4	RV	0	Reserved

Register: GNERRST Device: 20 Function: 2 Offset: 1C0h			
Bit	**Attr**	**Default**	**Description**
3	RW1CS	0	QPI[1] Protocol Error Status This bit indicates that the Intel QuickPath Interconnect protocol layer port 1 has detected an error
2	RW1CS	0	QPI[0] Protocol Error Status This bit indicates that the Intel QuickPath Interconnect protocol layer port 0 has detected an error
1	RW1CS	0	QPI[1] Error Status This bit indicates that QPI[1] port has detected an error
0	RW1CS	0	QPI[0] Error Status This bit indicates that QPI[0] port has detected an error

21.7.1.2 GFERRST: Global Fatal Error Status Register

This register indicates the fatal error reported to the IOH global error logic. An individual error status bit that is set indicates that a particular local interface has detected an error.

Register: GFERRST Device: 20 Function: 2 Offset: 1C4h			
Bit	**Attr**	**Default**	**Description**
31:26	RV	0	Reserved
25	RW1CS	0	VTd Error Status This bit indicates that IOH has detected a Intel VT-d related error.
24	RW1CS	0	Miscellaneous Error Status This bit indicates that IOH has detected a miscellaneous error.
23	RW1CS	0	IOH Core Error Status This bit indicates that IOH core has detected an error.
22	RV	0	Reserved
21	RW1CS	0	Thermal Error Status This bit indicates that IOH has detected thermal error.
20	RW1CST	0	ESI Error Status This bit indicates that IOHESI port 0 has detected an error.
19:16	RV	0	Reserved
15	RW1CS	0	PCIe [10] Error Status PCIe port 10 has detected an error.
14	RW1CS	0	PCIe [9] Error Status PCIe port 9 has detected an error.
13	RW1CS	0	PCIe [8] Error Status PCIe port 8 has detected an error.
12	RW1CS	0	PCIe [7] Error Status PCIe port 7 has detected an error.
11	RW1CS	0	PCIe [6] Error Status PCIe port 6 has detected an error.
10	RW1CS	0	PCIe [5] Error Status PCIe port 5 has detected an error.

Register: GFERRST Device: 20 Function: 2 Offset: 1C4h			
Bit	**Attr**	**Default**	**Description**
9	RW1CS	0	PCIe [4] Error Status PCIe port 4 has detected an error.
8	RW1CS	0	PCIe [3] Error Status PCIe port 3 has detected an error.
7	RW1CS	0	PCIe [2] Error Status PCIe port 2 has detected an error.
6	RW1CS	0	PCIe [1] Error Status PCIe port 1 has detected an error.
5			PCIe [0] Error Status PCIe port 0 has detected an error. PCIe[0] is associated with ESI.
4	RV	0	Reserved
3	RW1CS	0	QPI[1] Protocol Error Status This bit indicates that the Intel QuickPath Interconnect protocol layer port 1 has detected an error
2	RW1CS	0	QPI[0] Protocol Error Status This bit indicates that the Intel QuickPath Interconnect protocol layer port 0 has detected an error
1	RW1CS	0	QPI[1] Error Status This bit indicates that QPI[1] port has detected an error
0	RW1CS	0	QPI[0] Error Status This bit indicates that QPI[0] port has detected an error

21.7.1.3 GERRCTL: Global Error Control

This register controls the reporting of errors detected by the IOH local interfaces. An individual error control bit that is set disable (masks) error reporting of the particular local interface; software may set or clear the control bit. This register is not sticky and it gets reset to default upon system reset.

Note that bit fields in this register can become reserved depending on the port configuration. For example, if the PCIe port is configured as 2X8 ports, then only the corresponding PCI-EX8 bit fields are valid; other bits are unused and reserved.

Please note by default error reporting is enabled and setting global error control register will disable (mask) errors reporting from the local interface to global error status register. If the error reporting is disabled (masked) in this register, all errors from the corresponding local interface will not set any of the global error status bits.

Register: GERRCTL
Device: 20
Function: 2
Offset: 1C8h

Bit	Attr	Default	Description
31:26	RV	0	Reserved
25	RW	0	VTd Error Enable This bit controls the VTd related error. 0: Error reporting enabled 1: Error reporting disabled
24	RW	0	Miscellaneous Error Enable This bit controls the miscellaneous error detected in the IOH. 0: Error reporting enabled 1: Error reporting disabled
23	RW	0	IOH Core Error Enable This bit controls the error detected in the IOH Core. 0: Error reporting enabled 1: Error reporting disabled
22	RV	0	Reserved
21	RW	0	Thermal Error Enable This bit controls the detected Thermal error. in the IOH 0: Error reporting enabled 1: Error reporting disabled
20	RW	0	ESI Error Enable This bit controls the error detected in the ESI Port. 0: Error reporting enabled 1: Error reporting disabled
19:16	RV	0	Reserved
15	RW	0	PCIe [10] Error Enable This bit controls the error detected in the PCIe port 10 0: Error reporting enabled 1: Error reporting disabled
14	RW	0	PCIe [9] Error Enable This bit controls the error detected in the PCIe port 9 0: Error reporting enabled 1: Error reporting disabled
13	RW	0	PCIe [8] Error Enable This bit controls the error detected in the PCIe port 8 0: Error reporting enabled 1: Error reporting disabled
12	RW	0	PCIe [7] Error Enable This bit controls the error detected in the PCIe port 7 0: Error reporting enabled 1: Error reporting disabled
11	RW	0	PCIe [6] Error Enable This bit controls the error detected in the PCIe port 6 0: Error reporting enabled 1: Error reporting disabled
10	RW	0	PCIe [5] Error Enable This bit controls the error detected in the PCIe port 5 0: Error reporting enabled 1: Error reporting disabled

Register: GERRCTL Device: 20 Function: 2 Offset: 1C8h			
Bit	**Attr**	**Default**	**Description**
9	RW	0	PCIe [4] Error Enable This bit controls the error detected in the PCIe port 4 0: Error reporting enabled 1: Error reporting disabled
8	RW	0	PCIe [3] Error Enable This bit controls the error detected in the PCIe port 3 0: Error reporting enabled 1: Error reporting disabled
7	RW	0	PCIe [2] Error Enable This bit controls the error detected in the PCIe port 2 0: Error reporting enabled 1: Error reporting disabled
6	RW	0	PCIe [1] Error Enable This bit controls the error detected in the PCIe port 1 0: Error reporting enabled 1: Error reporting disabled
5			PCIe [0] Error Enable This bit controls the error detected in associated with ESI. 0: Error reporting enabled 1: Error reporting disabled
4	RV	0	Reserved
3	RW	0	QPI[1] Protocol Error Enable This bit controls the error detected in the Intel QPI Protocol Layer Port 1 0: Error reporting enabled 1: Error reporting disabled
2	RW	0	QPI[0] Protocol Error Enable This bit controls the error detected in the Intel QPI Protocol Layer Port 0 0: Error reporting enabled 1: Error reporting disabled
1	RW	0	QPI[1] Error Enable This bit controls the error detected in the Intel QPI Port 1 0: Error reporting enabled 1: Error reporting masked
0	RW	0	QPI[0] Error Enable This bit controls the error detected in the Intel QPI Port 0 0: Error reporting enabled 1: Error reporting disabled

21.7.1.4 GSYSST: Global System Event Status Register

This register indicates the error severity signaled by the IOH global error logic. Setting of an individual error status bit indicates that the corresponding error severity has been detected by the IOH.

Register: GSYSST
Device: 20
Function: 2
Offset: 1CCh

Bit	Attr	Default	Description
31:5	RV	0	Reserved
4	ROS	0	Severity 4 Error Status When set, IOH has detected an error of error severity 4
3	ROS	0	Severity 3 Error Status When set, IOH has detected an error of error severity 3
2	ROS	0	Severity 2 Error Status When set, IOH has detected an error of error severity 2
1	ROS	0	Severity 1 Error Status When set, IOH has detected an error of error severity 1
0	ROS	0	Severity 0 Error Status When set, IOH has detected an error of error severity 0

21.7.1.5 GSYSCTL: Global System Event Control Register

The system event control register controls the reporting the errors indicated by the system event status register. When cleared, the error severity does not cause the generation of the system event. When set, detection of the error severity generates system event(s) according to system event map register (SYSMAP).

Register: GSYSCTL
Device: 20
Function: 2
Offset: 01D0

Bit	Attr	Default	Description
31:5	RV	0	Reserved
4	RW	0	Severity 4 Error enable 0 - Disable system event reporting of the error severity 1 - Enable system event reporting of the error severity Note setting 0 of this bit does not prevent setting of the system event status register.
3	RW	0	Severity 3 Error enable 0 - Disable system event reporting of the error severity 1 - Enable system event reporting of the error severity Note setting 0 of this bit does not prevent setting of the system event status register.
2	RW	0	Severity 2 Error enable 0 - Disable system event reporting of the error severity 1 - Enable system event reporting of the error severity Note setting 0 of this bit does not prevent setting of the system event status register.

Register: GSYSCTL Device: 20 Function: 2 Offset: 01D0			
Bit	**Attr**	**Default**	**Description**
31:5	RV	0	Reserved
1	RW	0	Severity 1 Error enable 0 - Disable system event reporting of the error severity 1 - Enable system event reporting of the error severity Note setting 0 of this bit does not prevent setting of the system event status register.
0	RW	0	Severity 0 Error enable 0 - Disable system event reporting of the error severity 1 - Enable system event reporting of the error severity Note setting 0 of this bit does not prevent setting of the system event status register.

21.7.1.6 GTIME: Global Error Timer Register

Global Error Timer register is a free running 64-bit counter and will indicate the current value of the 64-bit counter. This counter is reset to 0 by PWRGOOD. Once out of PWRGOOD reset, the counter begins to run.

Register: GTIME Device: 20 Function: 2 Offset: 1D4h			
Bit	**Attr**	**Default**	**Description**
63:0	RWS	0	Error Log Time Stamp This is the 64-bit free running counter using core clock. Core clock are: - 400 Mhz if CSI freq is 6.4 GHz - 367 Mhz if CSI freq is 5.867 GHz - 300 Mhz if CSI freq is 4.8 GHz - 200 MHz if CSI freq is 3.2 GHz

21.7.1.7 GFFERRST: Global Fatal FERR Status Register

Register: GFFERRST Device: 20 Function: 2 Offset: 1DCh			
Bit	**Attr**	**Default**	**Description**
31:26	RV	0	Reserved
25:0	ROS	0	Global Error Status Log This filed logs the global error status register content when the first fatal error is reported. This has the same format as the global error status register (GERRST). Note: If two fatal errors occur in the same cycle, both errors will be logged.

21.7.1.8 GFFERRTIME: Global Fatal FERR Time Stamp Register

Register: GFFERRTIME Device: 20 Function: 2 Offset: 1E0h			
Bit	**Attr**	**Default**	**Description**
63:0	ROS	0	Global Error Time Stamp The time stamp register logs the 64-bit free running counter when the first error was logged.

21.7.1.9 GFNERRST: Global Fatal NERR Status Register

Register: GFNERRST Device: 20 Function: 2 Offset: 1E8h			
Bit	**Attr**	**Default**	**Description**
31:26	RV	0	Reserved
25:0	ROS	0	**Global Error Status Log** This filed logs the global error status register content when the next fatal error is reported. This has the same format as the global error status register (GERRST). Note: Only second error gets logged into GFNERRST (subsequent error does not get logged into GFNERRST.

21.7.1.10 GNFERRST: Global Non-Fatal FERR Status Register

Register: GNFERRTIME Device: 20 Function: 2 Offset: 1ECh			
Bit	**Attr**	**Default**	**Description**
31:26	RV	0	Reserved
25:0	ROS	0	Global Error Status Log This filed logs the global error status register content when the first non-fatal error is reported. This has the same format as the global error status register (GERRST). Note: If two non-fatal errors occur in the same cycle, both errors will be logged.

21.7.1.11 GNFERRTIME: Global Non-Fatal FERR Time Stamp Register

Register: GNFERRTIME
Device: 20
Function: 2
Offset: 1F0h

Bit	Attr	Default	Description
63:0	ROS	0	Time Stamp The time stamp register logs the 64-bit free running counter when the first non-fatal error was logged.

21.7.1.12 GNNERRST: Global Non-Fatal NERR Status Register

Register: GNNERRST
Device: 20
Function: 2
Offset: 1F8h

Bit	Attr	Default	Description
31:26	RV	0	Reserved
25:0	ROS	0	Global Error Status Log This filed logs the global error status register content when the subsequent non-fatal error is reported. This has the same format as the global error status register (GERRST). Note: Only second error gets logged into GFNERRST (subsequent error does not get logged into GFNERRST.

21.8 IOH Local Error Registers

Table 21-15. IOH Local Error Map #1 (Dev 20, Function 2)

QPI0ERRST	200h	QPI1ERRST	280h
QPI0ERRCTL	204h	QPI1ERRCTL	284h
QPI0FFERRST	208h	QPI1FFERRST	288h
QPI0FNERRST	20Ch	QPI1FNERRST	28Ch
QPI0NFERRST	210h	QPI1NFERRST	290h
QPI0NNERRST	214h	QPI1NNERRST	294h
QPI0ERRCNTSEL	218h	QPI1ERRCNTSEL	298h
QPI0ERRCNT	21Ch	QPI1ERRCNT	29Ch
	220h		2A0h
	224h		2A4h
	228h		2A8h
	22Ch		2ACh
QPIP0ERRST	230h	QPIP1ERRST	2B0h
QPIP0ERRCTL	234h	QPIP1ERRCTL	2B4h
QPIP0FFERRST	238h	QPIP1FFERRST	2B8h
QPIP0FNERRST	23Ch	QPIP1FNERRST	2BCh
QPIP0FFERRHD	240h	QPIP1FFERRHD	2C0h
	244h		2C4h
	248h		2C8h
	24Ch		2CCh
QPIP0NFERRST	250h	QPIP1NFERRST	2D0h
QPIP0NNERRST	254h	QPIP1NNERRST	2D4h
QPIP0NFERRHD	258h	QPIP1NFERRHD	2D8h
	25Ch		2DCh
	260h		2E0h
	264h		2E4h
QPIP0ERRCNTSEL	268h	QPIP1ERRCNTSEL	2E8h
QPIP0ERRCNT	26Ch	QPIP1ERRCNT	2ECh
	270h		2F0h
	274h		2F4h
	278h		2F8h
	27Ch		2FCh

Table 21-16. IOH Local Error Map #2 (Dev 20, Function 2)

IOHERRST	300h	MIERRST	380h
IOHERRCTL	304h	MIERRCTL	384h
IOHFFERRST	308h	MIFFERRST	388h
IOHFFERRHD	30Ch	MIFFERRHD	38Ch
	310h		390h
	314h		394h
	318h		398h
IOHFNERRST	31Ch	MIFNERRST	39Ch
IOHNFERRST	320h	MINFERRST	3A0h
IOHNFERRHD	324h	MINFERRHD	3A4h
	328h		3A8h
	32Ch		3ACh
	330h		3B0h
IOHNNERRST	334h	MINNERRST	3B4h
	338h		3B8h
IOHERRCNTSEL	33Ch	MIERRCNTSEL	3BCh
IOHERRCNT	340h	MIERRCNT	3C0h
	344h		3C4h
	348h		3C8h
	34Ch		3CCh
	350h		3D0h
	354h		3D4h
	358h		3D8h
	35Ch		3DCh
THRERRST	360h		3E0h
THRERRCTL	364h		3E4h
THRFFERRST	368h		3E8h
THRFNERRST	36Ch		3ECh
THRNFERRST	370h		3F0h
THRNNERRST	374h		3F4h
THRERRCNTSEL	378h		3F8h
THRERRCNT	37Ch		3FCh

Table 21-17. IOH Local Error Map #2 (Dev 20, Function 2, Page 4 of 4)

QPI0FERRFLIT0	400h 404h 408h	QPI1FERRFLIT0	480h 484h 488h
QPI0FERRFLIT1	40Ch 410h 414h	QPI1FERRFLIT1	48Ch 490h 494h
	418h 41Ch 420h 424h 428h 42Ch		498h 49Ch 4A0h 4A4h 4A8h 4ACh
QPI0PFERRLFLIT0	430h 434h 438h	QPI1PFERRLFLIT0	4B0h 4B4h 4B8h
QPI0PFERRLFLIT1	43Ch 440h 444h	QPI1PFERRLFLIT1	4BCh 4C0h 4C4h
QPI0PFERRLFLIT2	448h 44Ch 450h	QPI1PFERRLFLIT2	4C8h 4CCh 4D0h
	454h 458h 45Ch 460h 464h 468h 46Ch 470h 474h 478h 47Ch		4D4h 4D8h 4DCh 4E0h 4E4h 4E8h 4ECh 4F0h 4F4h 4F8h 4FCh

21.8.1 IOH Local Error Register

21.8.1.1 QPI[1:0]ERRST: Intel QPI Error Status Register

This register indicates the error detected by the Intel QuickPath Interconnect local interface. See Section 16.7, "IOH Error Handling Summary" for more details on error type. For details on usage of local error logginf, see Section 16.4.3.1, "Local Error Registers" .

Register: QPI[1:0]ERRST
Device: 20
Function: 2
Offset: 280h, 200h

Bit	Attr	Default	Description
31:13	RV	0	Reserved
12	RW1CS	0	**D4 - Intel QPI Link Internal Parity Error**
11	RW1CS	0	**D3 - Intel QPI Link Layer Control Error**
10	RW1CS	0	**C0 - Intel QPI Link Layer detected CRC error** - unsuccessful link level retry - entered LLR abort state
9	RW1CS	0	**B1 - Intel QPI Link Layer detected CRC error** - successful link level retry after PHY reinit
8	RW1CS	0	**B0 - Intel QPI Link Layer CRC - successful link level retry.** - B0 bit can be set for a successful link level retry following a physical layer reset. This bit can get set even if CRC errors are not logged.
7	RW1CS	0	**DG - Intel QPI Link Layer Detected unsupported/undefined msgclass/opcode/vn packet Error** - See QPI[1:0]FERRFLIT0 for flit info.
6	RW1CS	0	**B5 - Potential Spurious CRC error on L0s/L1 Exit -** See QPI[1:0]FERRFLIT0 for 8bit-CRC flit info, and for 16-bit-CRC GB flit info and QPI[1:0]FERRFLIT1 for 16-bit-CRC GA flit info.
5	RW1CS	0	**B6 - Intel QPI Link Layer CRC error -** See QPI[1:0]FERRFLIT0 for 8bit-CRC flit info, and for 16-bit-CRC GB flit info and QPI[1:0]FERRFLIT1 for 16-bit-CRC GA flit info.
4	RW1CS	0	**D2 - Intel QPI Physical Layer Initialization Failure**
3	RW1CS	0	D1 - Intel QPI Physical Layer Detected Latency Buffer Rollover
2	RW1CS	0	**D0 - Intel QPI Physical Layer Detected Drift Buffer Alarm**
1	RW1CS	0	C7 - **Intel QPI** Physical Layer Reset Successful with Width Change
0	RW1CS	0	B2 - **Intel QPI** Physical Layer Successful Reset at same Width

21.8.1.2 QPI[1:0]ERRCTL: Intel QuickPath Interconnect Error Control Register

This register enable the error status bit setting for an Intel® QuickPath Interconnect detected error. Setting of the bit enables the setting of the corresponding error status bit in QPIERRST register. If the bit is cleared, the corresponding error status will not be set.

Register: QPI[1:0]ERRCTL
Device: 20
Function: 2
Offset: 284h, 204h

Bit	Attr	Default	Description
31:13	RV	0	*Reserved*
12	RWS	0	**D4 - Intel QPI Link Internal Parity Error Enable** 0 - Disable error status logging 1 - Enable Error status logging
11	RWS	0	**D3 - Intel QPI Link Layer Control Error Enable** 0 - Disable error status logging 1 - Enable Error status logging
10	RWS	0	C0 - Intel QPI Link Layer detected CRC error - unsuccessful link level retry - entered LLR abort state **Enable** 0 - Disable error status logging 1 - Enable Error status logging
9	RWS	0	B1 - Intel QPI Link Layer detected CRC error - successful link level retry after PHY reinit **Enable** 0 - Disable error status logging 1 - Enable Error status logging
8	RWS	0	**B0 - Intel QPI Link Layer CRC - successful link level retry Enable** 0 - Disable error status logging 1 - Enable Error status logging
7	RWS	0	DG - Intel QPI Link Layer Detected unsupported/undefined msgclass/ opcode/vn packet Error **Enable** 0 - Disable error status logging 1 - Enable Error status logging
6	RWS	0	B5 - Potential Spurious CRC error on L0s/L1 Exit **Enable** 0 - Disable error status logging 1 - Enable Error status logging
5	RWS	0	**B6 - Intel QPI Link Layer CRC error Enable** 0 - Disable error status logging 1 - Enable Error status logging
4	RWS	0	**D2 - Intel QPI Physical Layer Initialization Failure Enable** 0 - Disable error status logging 1 - Enable Error status logging
3	RWS	0	D1 - Intel QPI Physical Layer Detected Latency Buffer Rollover **Enable** 0 - Disable error status logging 1 - Enable Error status logging
2	RWS	0	**D0 - Intel QPI Physical Layer Detected Drift Buffer Alarm Enable** 0 - Disable error status logging 1 - Enable Error status logging
1	RWS	0	C7 - Intel QPI Physical Layer Reset Successful with Reduced Width **Enable** 0 - Disable error status logging 1 - Enable Error status logging
0	RWS	0	B2 - Intel QPI Physical Layer Successful Reset at same Width **Enable** 0 - Disable error status logging 1 - Enable Error status logging

21.8.1.3 Intel QuickPath Interconnect Error Log Register

This register logs the information associated with the reporting of Intel QuickPath Interconnect errors. There are two sets of error log registers of identical format: FERR logs the first occurrence of an error, and NERR logs the next occurrence of the error. An individual error is reported with the corresponding severity in this register. Software can program the error severity to one of the three severities supported by IOH. This register is sticky and can only be reset by PWRGOOD. Clearing of the QPI**ERRST is done by clearing the corresponding QPIERRST bits.

21.8.1.4 QPI[1:0]FFERRST: Intel QuickPath Interconnect Fatal FERR Status Register

The error status log indicates which error is causing the report of the first fatal error event.

Register: QPI[1:0]FFERRST
Device: 20
Function: 2
Offset: 288h, 208h

Bit	Attr	Default	Description
31:13	RV	0	Reserved
12	RW1CS	0	**D4 - Intel QPI Link Internal Parity Error**
11	RW1CS	0	**D3 - Intel QPI Link Layer Control Error**
10	RW1CS	0	**C0 - Intel QPI Link Layer detected CRC error** - unsuccessful link level retry - entered LLR abort state
9	RW1CS	0	**B1 - Intel QPI Link Layer detected CRC error** - successful link level retry after PHY reinit
8	RW1CS	0	**B0 - Intel QPI Link Layer CRC - successful link level retry**
7	RW1CS	0	**DG - Intel QPI Link Layer Detected unsupported/undefined msgclass/opcode/vn packet Error**
6	RW1CS	0	**B5 -** Potential Spurious CRC error on L0s/L1 Exit
5	RW1CS	0	**B6 - Intel QPI Link Layer CRC error**
4	RW1CS	0	**D2 - Intel QPI Physical Layer Initialization Failure**
3	RW1CS	0	D1 - Intel QPI Physical Layer Detected Latency Buffer Rollover
2	RW1CS	0	**D0 - Intel QPI Physical Layer Detected Drift Buffer Alarm**
1	RW1CS	0	C7 - **Intel QPI** Physical Layer Reset Successful with Reduced Width
0	RW1CS	0	B2 - **Intel QPI** Physical Layer Successful Reset at same Width

21.8.1.5 QPI[1:0]FNERRST: Intel QuickPath Interconnect Fatal NERR Status Registers

The error status log indicates which error is causing the report of the next fatal error events.

Register: QPI[1:0]FNERRST
Device: 20
Function: 2
Offset: 28Ch, 20Ch

Bit	Attr	Default	Description
31:13	RV	0	Reserved
12	RW1CS	0	**D4 - Intel QPI Link Internal Parity Error**

Register: QPI[1:0]FNERRST Device: 20 Function: 2 Offset: 28Ch, 20Ch			
Bit	**Attr**	**Default**	**Description**
11	RW1CS	0	**D3 - Intel QPI Link Layer Control Error**
10	RW1CS	0	**C0 - Intel QPI Link Layer detected CRC error**
9	RW1CS	0	**B1 - Intel QPI Link Layer detected CRC error**
8	RW1CS	0	**B0 - Intel QPI Link Layer CRC - successful link level retry**
7	RW1CS	0	**DG - Intel QPI Link Layer Detected unsupported/undefined msgclass/opcode/vn packet Error**
6	RW1CS	0	**B5 -** Potential Spurious CRC error on L0s/L1 Exit
5	RW1CS	0	**B6 - Intel QPI Link Layer CRC error**
4	RW1CS	0	**D2 - Intel QPI Physical Layer Initialization Failure**
3	RW1CS	0	D1 - Intel QPI Physical Layer Detected Latency Buffer Rollover
2	RW1CS	0	**D0 - Intel QPI Physical Layer Detected Drift Buffer Alarm**
1	RW1CS	0	C7 - **Intel QPI** Physical Layer Reset Successful with Reduced Width
0	RW1CS	0	B2 - **Intel QPI** Physical Layer Successful Reset at same Width

21.8.1.6 QPI[1:0]NFERRST: Intel QuickPath Interconnect Non-Fatal FERR Status Registers

The error status log indicates which error is causing the report of the first non-fatal error event.

Register: QPI[1:0]NFERRST Device: 20 Function: 2 Offset: 290h, 210h			
Bit	**Attr**	**Default**	**Description**
31:13	RV	0	Reserved
12	RW1CS	0	**D4 - Intel QPI Link Internal Parity Error**
11	RW1CS	0	**D3 - Intel QPI Link Layer Control Error**
10	RW1CS	0	**C0 - Intel QPI Link Layer detected CRC error**
9	RW1CS	0	**B1 - Intel QPI Link Layer detected CRC error**
8	RW1CS	0	**B0 - Intel QPI Link Layer CRC - successful link level retry**
7	RW1CS	0	**DG - Intel QPI Link Layer Detected unsupported/undefined msgclass/opcode/vn packet Error**
6	RW1CS	0	**B5 - Potential Spurious CRC error on L0s/L1 Exit**
5	RW1CS	0	**B6 - Intel QPI Link Layer CRC error**
4	RW1CS	0	**D2 - Intel QPI Physical Layer Initialization Failure**
3	RW1CS	0	D1 - Intel QPI Physical Layer Detected Latency Buffer Rollover
2	RW1CS	0	**D0 - Intel QPI Physical Layer Detected Drift Buffer Alarm**
1	RW1CS	0	C7 - **Intel QPI** Physical Layer Reset Successful with Reduced Width
0	RW1CS	0	B2 - **Intel QPI** Physical Layer Successful Reset at same Width

21.8.1.7 QPI[1:0]NNERRST: Intel QuickPath Interconnect Non-Fatal NERR Status Registers

The error status log indicates which error is causing the report of the next non-fatal error event.

Register: QPI[1:0]NNERRST
Device: 20
Function: 2
Offset: 294h, 214h

Bit	Attr	Default	Description
31:13	RV	0	Reserved
12	RW1CS	0	**D4 - Intel QPI Link Internal Parity Error**
11	RW1CS	0	**D3 - Intel QPI Link Layer Control Error**
10	RW1CS	0	**C0 - Intel QPI Link Layer detected CRC error**
9	RW1CS	0	**B1 - Intel QPI Link Layer detected CRC error**
8	RW1CS	0	**B0 - Intel QPI Link Layer CRC - successful link level retry**
7	RW1CS	0	**DG - Intel QPI Link Layer Detected unsupported/undefined msgclass/opcode/vn packet Error**
6	RW1CS	0	**B5 - Potential Spurious CRC error on L0s/L1 Exit**
5	RW1CS	0	**B6 - Intel QPI Link Layer CRC error**
4	RW1CS	0	**D2 - Intel QPI Physical Layer Initialization Failure**
3	RW1CS	0	D1 - Intel QPI Physical Layer Detected Latency Buffer Rollover
2	RW1CS	0	**D0 - Intel QPI Physical Layer Detected Drift Buffer Alarm**
1	RW1CS	0	C7 - **Intel QPI** Physical Layer Reset Successful with Reduced Width
0	RW1CS	0	B2 - **Intel QPI** Physical Layer Successful Reset at same Width

21.8.1.8 QPI[1:0]ERRCNTSEL: Intel QuickPath Interconnect Error Counter Selection Register

Selects which errors to include in QPIERRCNT.

Register: QPI[1:0]ERRCNTSEL
Device: 20
Function: 2
Offset: 298h, 218h

Bit	Attr	Default	Description
31:13	RV	0	*Reserved*
12:0	RW	0	**See QPIERRST for per bit description of each error** 0 - Do not select this error type for error counting 1 - Select this error type for error counting

21.8.1.9 QPI[1:0]ERRCNT: Intel QuickPath Interconnect Error Counter Register

Register: QPI[1:0]ERRCNT Device: 20 Function: 2 Offset: 29Ch, 21Ch			
Bit	**Attr**	**Default**	**Description**
31:8	RV	0	*Reserved*
7	RW1CS		**ERROVF: Error Accumulator Overflow** 0: No overflow occurred 1: Error overflow. The error count may not be valid.
6:0	RW1CS	0	**ERRCNT: Error Accumulator** This counter accumulates errors that occur when the associated error type is selected in the ERRCNTSEL register. This register is cleared by writing 7Fh. Maximum counter available is 127d (7Fh).

21.8.1.10 QPIP[1:0]ERRST: Intel QuickPath Interconnect Protocol Error Status Register

This register indicates the error detected by the Intel QuickPath Interconnect protocol layer. See Section 16.7 for more details on each error type.

Register: QPIP[1:0]ERRST Device: 20 Function: 2 Offset: 2B0h, 230h			
Bit	**Attr**	**Default**	**Description**
31:20	RV	0	Reserved
19	RO	0	DH - QPI Protocol Layer detected unsupported / undefined packet error. Note: Shown for error code listing completeness only. Hardware and software have no affect on this bit.
18	RW1CS	0	DF - Illegal Inbound Request
17	RW1CS	0	**DE - Routing Table Invalid**
16	RV	0	Reserved
15	RW1CS	0	**DC - Protocol SAD illegal or non-existent memory for outbound snoop**
14	RW1CS	0	**DB - Protocol Parity Error**
13	RW1CS	0	**DA - Protocol Queue/Table Overflow or Underflow**
12	RW1CS	0	**D9 - Protocol Layer Received Viral from** Intel® **QPI**
11	RW1CS	0	**D8 - Protocol Layer Received Illegal packet field or Incorrect Target NodeID**
10	RW1CS	0	**D7 - Protocol Layer Received Unexpected Response/Completion**
9	RW1CS	0	**D6 - Protocol Layer Received Failed Response**
8	RW1CS	0	**D5 - Protocol Layer Detected Time-Out in ORB**
7-5	RV	0	Reserved
4	RW1CS	0	**C3 - CSR access crossing 32-bit boundary**
3	RW1CS	0	C2 - Write Cache Un-correctable ECC
2	RW1CS	0	**C1 - Protocol Layer Received Poisoned Packet.**

Register: QPIP[1:0]ERRST Device: 20 Function: 2 Offset: 2B0h, 230h			
Bit	**Attr**	**Default**	**Description**
1	RW1CS	0	B4 - Write Cache Correctable ECC
0	RW1CS	0	**B3 -** Intel® **QPI CPEI Error Status**

21.8.1.11 QPIP[1:0]ERRCTL: Intel QuickPath Interconnect Protocol Error Control Register

This register enable the error status bit setting for an Intel QuickPath Interconnect detected error. Setting of the bit enables the setting of the corresponding error status bit in QPIPERRST register. If the bit is cleared, the corresponding error status will not be set.

Register: QPIP[1:0]ERRCTL Device: 20 Function: 2 Offset: 2B4h, 234h			
Bit	**Attr**	**Default**	**Description**
31:20	RV	0	*Reserved*
19	RWS	0	DH - Intel QPI Protocol Layer Detected unsupported/undefined packet Error Enable 0 - Disable error status logging 1 - Enable Error status logging
18	RWS	0	**DF - Illegal Inbound Request Enable** 0 - Disable error status logging 1 - Enable Error status logging
17	RWS	0	**DE - Routing Table Invalid Enable** 0 - Disable error status logging 1 - Enable Error status logging
16	RV	0	Reserved
15	RWS	0	**DC - Protocol SAD illegal or non-existent memory for outbound snoop Enable** 0 - Disable error status logging 1 - Enable Error status logging
14	RWS	0	**DB - Protocol Parity Error Enable**
13	RWS	0	**DA - Protocol Queue/Table Overflow or Underflow Enable** 0 - Disable error status logging 1 - Enable Error status logging
12	RWS	0	**D9 - Protocol Layer Received Viral from Intel QPI Enable** 0 - Disable error status logging 1 - Enable Error status logging
11	RWS	0	**D8 - Protocol Layer Received Illegal packet field or Incorrect Target NodeID Enable** 0 - Disable error status logging 1 - Enable Error status logging
10	RWS	0	**D7 - Protocol Layer Received Unexpected Response/Completion Enable** 0 - Disable error status logging 1 - Enable Error status logging

Register: QPIP[1:0]ERRCTL Device: 20 Function: 2 Offset: 2B4h, 234h			
Bit	**Attr**	**Default**	**Description**
9	RWS	0	**D6 - Protocol Layer Received Failed Response Enable** 0 - Disable error status logging 1 - Enable Error status logging
8	RWS	0	**D5 - Protocol Layer Detected Time-Out in ORB Enable** 0 - Disable error status logging 1 - Enable Error status logging
7:5	RV	0	Reserved
4	RWS	0	**C3 - CSR access crossing 32-bit boundary Enable** 0 - Disable error status logging 1 - Enable Error status logging
3	RWS	0	C2 - Write Cache Un-correctable ECC Enable 0 - Disable error status logging 1 - Enable Error status logging
2	RWS	0	**C1 - Protocol Layer Received Poisoned Packet** Enable 0 - Disable error status logging 1 - Enable Error status logging
1	RWS	0	B4 - Write Cache Correctable ECC Enable 0 - Disable error status logging 1 - Enable Error status logging
0	RWS	0	**B3 - Intel QPI CPEI Error Status** Enable 0 - Disable error status logging 1 - Enable Error status logging

21.8.1.12 Intel QuickPath Interconnect Protocol Error Log Register

This register logs the information associated with the reporting of Intel QuickPath Interconnect protocol layer errors. There are two sets of error log registers of identical format: FERR logs the first occurrence of an error, and NERR logs the next occurrence of the error. An individual error is reported with the corresponding severity in this register. Software can program the error severity to one of the three severities supported by IOH. This register is sticky and can only be reset by PWRGOOD. Clearing of the QPIP**ERRST is done by clearing the corresponding QPIPERRST bits.

21.8.1.13 QPIP[1:0]FFERRST: Intel QuickPath Interconnect Protocol Fatal FERR Status Register

Register: QPIP[1:0]FFERRST Device: 20 Function: 2 Offset: 2B8h, 238h			
Bit	**Attr**	**Default**	**Description**
31:20	RV	0	Reserved
19:17	ROS	0	Intel QPI Error Status Log2 The error status log indicates which error is causing the report of the **first fatal error event**. The encoding indicates the corresponding bit position of the error in the Intel QuickPath Interconnect protocol error status register.
16	RV	0	Reserved

Register: QPIP[1:0]FFERRST Device: 20 Function: 2 Offset: 2B8h, 238h			
Bit	**Attr**	**Default**	**Description**
15:8	ROS	0	Intel QPI Error Status Log1 The error status log indicates which error is causing the report of the **first fatal error event**. The encoding indicates the corresponding bit position of the error in the Intel QuickPath Interconnect protocol error status register.
7:5	RV	0	Reserved
4:0	ROS	0	Intel QPI Error Status Log0 The error status log indicates which error is causing the report of the **first fatal error event**. The encoding indicates the corresponding bit position of the error in the Intel QuickPath Interconnect protocol error status register.

21.8.1.14 QPIP[1:0]FNERRST: Intel QuickPath Interconnect Protocol Fatal NERR Status Registers

Register: QPIP[1:0]FNERRST Device: 20 Function: 2 Offset: 2BCh, 23Ch			
Bit	**Attr**	**Default**	**Description**
31:20	RV	0	Reserved
19:17	ROS	0	Intel QPI Error Status Log2 The error status log indicates which error is causing the report of the **next fatal error event**. The encoding indicates the corresponding bit position of the error in the Intel QuickPath Interconnect protocol error status register. Note: If the same error occurs before the FERR status register bit is cleared, it is logged again in the NERR status register.
16	RV	0	Reserved
15:8	ROS	0	Intel QPI Error Status Log1 The error status log indicates which error is causing the report of the **next fatal error event**. The encoding indicates the corresponding bit position of the error in the Intel QuickPath Interconnect protocol error status register. Note: If the same error occurs before the FERR status register bit is cleared, it is logged again in the NERR status register.
7:5	RV	0	Reserved
4:0	ROS	0	Intel QPI Error Status Log0 The error status log indicates which error is causing the report of the **next fatal error event**. The encoding indicates the corresponding bit position of the error in the Intel QuickPath Interconnect protocol error status register. Note: If the same error occurs before the FERR status register bit is cleared, it is logged again in the NERR status register.

21.8.1.15 QPIP[1:0]FFERRHD: Intel QuickPath Interconnect Protocol Fatal FERR Header Log Register

Register: QPIP[1:0]FFERRHD
Device: 20
Function: 2
Offset: 2C0h, 240h

Bit	Attr	Default	Description
127:0	ROS	0	Intel QPI Error Header log Header log stores the header information of the associated with the **first fatal error**. The header stores the Intel QuickPath Interconnect packet fields of the erroneous Intel QuickPath Interconnect cycle. Refer to Intel QuickPath Interconnect specification chapter 4 for the header format of each type of Intel QuickPath Interconnect cycle.

21.8.1.16 QPIP[1:0]NFERRST: Intel QuickPath Interconnect Protocol Non-Fatal FERR Status

Register: QPIP[1:0]NFERRST
Device: 20
Function: 2
Offset: 2D0h, 250h

Bit	Attr	Default	Description
31:20	RV	0	Reserved
19:17	ROS	0	**Intel QPI Error Status Log2** The error status log indicates which error is causing the report of the **first non-fatal error event**. The encoding indicates the corresponding bit position of the error in the Intel QuickPath Interconnect protocol error status register.
16	RV	0	Reserved
15:8	ROS	0	Intel QPI Error Status Log1 The error status log indicates which error is causing the report of the **first non-fatal error event**. The encoding indicates the corresponding bit position of the error in the Intel QuickPath Interconnect protocol error status register.
7:5	RV	0	Reserved
4:0	ROS	0	Intel QPI Error Status Log0 The error status log indicates which error is causing the report of the **first non-fatal error event**. The encoding indicates the corresponding bit position of the error in the Intel QuickPath Interconnect protocol error status register.

21.8.1.17 QPIP[1:0]NNERRST: Intel QuickPath Interconnect Protocol Non-Fatal NERR Status

Register: QPIP[1:0]NNERRST
Device: 20
Function: 2
Offset: 2D4h, 254h

Bit	Attr	Default	Description
31:20	RV	0	Reserved
19:17	ROS	0	**Intel QPI Error Status Log2** The error status log indicates which error is causing the report of the **next non-fatal error event**. The encoding indicates the corresponding bit position of the error in the Intel QuickPath Interconnect protocol error status register. ***Note:*** If the same error occurs before the FERR status register bit is cleared, it is logged again in the NERR status register.
16	RV	0	Reserved
15:8	ROS	0	**Intel QPI Error Status Log1** The error status log indicates which error is causing the report of the **next non-fatal error event**. The encoding indicates the corresponding bit position of the error in the Intel QuickPath Interconnect protocol error status register. Note: If the same error occurs before the FERR status register bit is cleared, it is logged again in the NERR status register.
7:5	RV	0	Reserved
4:0	ROS	0	**Intel QPI Error Status Log0** The error status log indicates which error is causing the report of the **next non-fatal error event**. The encoding indicates the corresponding bit position of the error in the Intel QuickPath Interconnect protocol error status register. ***Note:*** If the same error occurs before the FERR status register bit is cleared, it is logged again in the NERR status register.

21.8.1.18 QPIP[1:0]NFERRHD: Intel QuickPath Interconnect Protocol Non-Fatal FERR Header Log Register

Register: QPIP[1:0]NFERRHD
Device: 20
Function: 2
Offset: 2D8h, 258h

Bit	Attr	Default	Description
127:0	ROS	0	**Intel QPI Error Header log** Header log stores the header information of the associated with the **first non-fatal error**. The header stores the Intel QuickPath Interconnect packet fields of the erroneous Intel QuickPath Interconnect cycle. Refer to Intel QuickPath Interconnect specification chapter 4 for the header format of each type of Intel QuickPath Interconnect cycle.

21.8.1.19 QPIP[1:0]ERRCNTSEL: Intel QuickPath Interconnect Protocol Error Counter Selection Register

Register: QPIP[1:0]ERRCNTSEL
Device: 20
Function: 2
Offset: 2E8h, 268h

Bit	Attr	Default	Description
31:20	RV	0	*Reserved*
19:17	RWS	0	**QPIPERRCNTSEL19_17** See QPIPERRST for per bit description of each error 0 - Do not select this error type for error counting 1 - Select this error type for error counting
16	RV	0	*Reserved*
15:8	RWS	0	**QPIPERRCNTSEL15_8** See QPIPERRST for per bit description of each error 0 - Do not select this error type for error counting 1 - Select this error type for error counting
7:5	RV	0	*Reserved*
4:0	RWS	0	**QPIPERRCNTSEL4_0** See QPIPERRST for per bit description of each error 0 - Do not select this error type for error counting 1 - Select this error type for error counting

21.8.1.20 QPIP[1:0]ERRCNT: Intel QuickPath Interconnect Protocol Error Counter Register

Register: QPIP[1:0]ERRCNTSEL
Device: 20
Function: 2
Offset: 2ECh, 26Ch

Bit	Attr	Default	Description
31:8	RV	0	*Reserved*
7	RW1CS		**ERROVF: Error Accumulator Overflow** 0: No overflow occurred 1: Error overflow. The error count may not be valid.
6:0	RW1CS	0	**ERRCNT: Error Accumulator** This counter accumulates errors that occur when the associated error type is selected in the ERRCNTSEL register. This register is cleared by writing 7Fh. Maximum counter available is 127d (7Fh).

21.8.2 IOHERRST: IOH Core Error Status Register

This register indicates the IOH internal core errors detected by the IOH error logic. An individual error status bit that is set indicates that a particular error occurred; software may clear an error status by writing a 1 to the respective bit. This register is sticky and can only be reset by PWRGOOD. Clearing of the IOH**ERRST is done by clearing the corresponding IOHERRST bits.

Register: IOHERRST Device: 20 Function: 2 Offset: 300h			
Bit	**Attr**	**Default**	**Description**
31:7	RV	0	Reserved
6	RW1CS	0	**C6 - FIFO Overflow / Underflow error**
5	RW1CS	0	**C5 - Completor abort address error**
4	RW1CS	0	**C4 - Master abort address error**
3	RV	0	Reserved
2	RV	0	Reserved
1	RV	0	Reserved
0	RV	0	Reserved

21.8.2.1 IOHERRCTL: IOH Core Error Control Register

This register enables the error status bit setting for IOH internal core errors detected by the IOH. Setting of the bit enables the setting of the corresponding error status bit in IOHERRST register. If the bit is cleared, the corresponding error status will not be set.

This register is sticky and can only be reset by PWRGOOD.

Register: IOHERRCTL Device: 20 Function: 2 Offset: 304h			
Bit	**Attr**	**Default**	**Description**
31:7	RV		Reserved
6	RWS	0	**C6 - FIFO Overflow / Underflow error Enable**
5	RWS	0	**C5 - Completor abort address error Enable**
4	RWS	0	**C4 - Master abort address error Enable**
3:0	RV	0	Reserved

21.8.2.2 IOHFFERRST: IOH Core Fatal FERR Status Register

The error status log indicates which error is causing the report of **first fatal error** event.

Register: IOHFFERRST Device: 20 Function: 2 Offset: 308h			
Bit	**Attr**	**Default**	**Description**
31:7	RV	0	Reserved
6:4	ROS	0	IOH Core Error Status Log The error status log indicates which error is causing the report of the first error event. The encoding indicates the corresponding bit position of the error in the error status register.
3:0	RV	0	Reserved

21.8.2.3 IOHFFERRHD: IOH Core Fatal FERR Header Register

Register: IOHFFERRHD Device: 20 Function: 2 Offset: 30Ch			
Bit	**Attr**	**Default**	**Description**
127:0	ROS	0	**IOH Core Error Header log** Header log stores the IOH data path header information of the associated IOH core error. The header indicates where the error is originating from and the address of the cycle. [127:90] Reserved [89] Error Type MA/CA [88:81] Message Code [7:0] [80:65] MSI Data [15:0] [64:58] Reserved [57:51] TType {Fmt [1:0], Type[4:0]} [50:0] Address [50:0] ***Note:*** For interrupts Address(50:0) will be logged as follows when Interrupt Remapping is enabled: Address(50:19) = DW Address = (Dest ID[29:0], Redirect Hint, Mode) Mode denotes 0 for physical and 1 for logical Address(18:0) - NA for interrupts and could be zeros or ones. The two upper bits of the Destination ID (Dest ID[31:30]) will not be logged when Interrupt Remapping is enabled.

21.8.2.4 IOHFNERRST: IOH Core Fatal NERR Status Register

The error status log indicates which error is causing the report of the **next error event**.

Note: If the same error occurs before the FERR status register bit is cleared, it is logged again in the NERR status register.

Register: IOHFNERRST Device: 20 Function: 2 Offset: 31Ch			
Bit	**Attr**	**Default**	**Description**
31:7	RV	0	Reserved
6:4	ROS	0	IOH Core Error Status Log The error status log indicates which error is causing the report of the next error event. The encoding indicates the corresponding bit position of the error in the error status register. Note: If the same error occurs before the FERR status register bit is cleared, it is logged again in the NERR status register.
3:0	RV	0	Reserved

21.8.2.5 IOHNFERRST: IOH Core Non-Fatal FERR Status Register

The error status log indicates which error is causing the report of the **first error event**.

Register: IOHNFERRST
Device: 20
Function: 2
Offset: 320h

Bit	Attr	Default	Description
31:7	RV	0	Reserved
6:4	ROS	0	IOH Core Error Status Log The error status log indicates which error is causing the report of the first error event. The encoding indicates the corresponding bit position of the error in the error status register.
3:0	RV	0	Reserved

21.8.2.6 IOHNFERRHD[0:3]: Local Non-Fatal FERR Header Register

Register: IOHNFERRHD
Device: 20
Function: 2
Offset: 324h

Bit	Attr	Default	Description
127:0	ROS	0	**IIOH Core Error Header log** Header log stores the IOH data path header information of the associated IOH core error. The header indicates where the error is originating from and the address of the cycle. [127:90] Reserved [89] Error Type MA/CA [88:81] Message Code [7:0] [80:65] MSI Data [15:0] [64:58] Reserved [57:51] TType {Fmt [1:0], Type[4:0]} [50:0] Address [50:0] ***Note:*** For interrupts Address(50:0) will be logged as follows when Interrupt Remapping is enabled: Address(50:19) = DW Address = (Dest ID[29:0], Redirect Hint, Mode) Mode denotes 0 for physical and 1 for logical Address(18:0) - NA for interrupts and could be zeros or ones. The two upper bits of the Destination ID (Dest ID[31:30]) will not be logged when Interrupt Remapping is enabled.

21.8.2.7 IOHNNERRST: IOH Core Non-Fatal NERR Status Register

The error status log indicates which error is causing the report of the **next error event**.

Note: If the same error occurs before the FERR status register bit is cleared, it is logged again in the NERR status register.

Register: IOHNNERRST
Device: 20
Function: 2
Offset: 334h

Bit	Attr	Default	Description
31:7	RV	0	Reserved
6:4	ROS	0	IOH Core Error Status Log The error status log indicates which error is causing the report of the next error event. The encoding indicates the corresponding bit position of the error in the error status register. Note: If the same error occurs before the FERR status register bit is cleared, it is logged again in the NERR status register.
3:0	RV	0	Reserved

21.8.2.8 IOHERRCNTSEL: IOH Error Counter Selection Register

Register: IOHERRCNTSEL
Device: 20
Function: 2
Offset: 33Ch

Bit	Attr	Default	Description
31:7	RV	0	Reserved
6	RW	0	**C6 - FIFO Overflow/Underflow error Count Select** 0 - Do not select this error type for error counting 1 - Select this error type for error counting
5	RW	0	**C5 - Completor abort address error Count Select** 0 - Do not select this error type for error counting 1 - Select this error type for error counting
4	RW	0	**C4 - Master abort address error Count Select** 0 - Do not select this error type for error counting 1 - Select this error type for error counting
3:0	RV	0	Reserved

21.8.2.9 IOHERRCNT: IOH Core Error Counter Register

Register: IOHERRCNT
Device: 20
Function: 2
Offset: 340h

Bit	Attr	Default	Description
31:8	RV		Reserved

Register: IOHERRCNT Device: 20 Function: 2 Offset: 340h			
Bit	**Attr**	**Default**	**Description**
7	RW1CS		**ERROVF: Error Accumulator Overflow** 0: No overflow occurred 1: Error overflow. The error count may not be valid.
6:0	RW1CS	0	**ERRCNT: Error Accumulator** This counter accumulates errors that occur when the associated error type is selected in the ERRCNTSEL register. This register is cleared by writing 7Fh. Maximum counter available is 127d (7Fh).

21.8.3 THRERRST: Thermal Error Status

This register indicates the thermal errors detected by the IOH error logic. An individual error status bit that is set indicates that a particular error occurred; software may clear an error status by writing a 1 to the respective bit. This register is sticky and can only be reset by PWRGOOD. Clearing of the THR**ERRST is done by clearing the corresponding THRERRST bits.

Register: THRERRST Device: 20 Function: 2 Offset: 360h			
Bit	**Attr**	**Default**	**Description**
31:4	RV	0	Reserved
3			**F3 - Throttling History** This error is generated when the most recent throttle event occurs.
2	RW1CS	0	**F2 - Catastrophic Thermal Event** This error is generated when the temperature at the thermal sensor reaches the TSTHRCATA threshold.
1	RV	0	**F1 - TSMAX Updated**
0	RW1CS	0	**F0 - Thermal Alert** This error is generated when the temperature at the thermal sensor exceeds the TSTHRHI threshold.

21.8.3.1 THRERRCTL: Thermal Error Control

This register controls the reporting of thermal errors detected by the IOH error logic. An individual error control bit that is set allows reporting of that particular error; software may set or clear the respective bit. This register is sticky and can only be reset by PWRGOOD.

Register: THRERRCTL
Device: 20
Function: 2
Offset: 364h

Bit	Attr	Default	Description
31:4	RV	0	Reserved
3	RWS	0	**F3 - Throttling History** 0: Disable setting this status bit on this error 1: Enable setting this status bit on this error
2	RWS	0	**F2 - Catastrophic Thermal Event** 0: Disable setting this status bit on this error 1: Enable setting this status bit on this error
1	RWS	0	**F1 - TSMAX Updated** 0: Disable setting this status bit on this error 1: Enable setting this status bit on this error
0	RWS	0	**F0 - Thermal Alert** 0: Disable setting this status bit on this error 1: Enable setting this status bit on this error

21.8.3.2 THRNFERRST: Thermal Non-Fatal FERR Status

Register: THRNNERRST
Device: 20
Function: 2
Offset: 370h

Bit	Attr	Default	Description
31:4	RV	0	Reserved
3	ROS	0	**Thermal Error Status Log 3** The error status log indicates which error is causing the report of the **first error event**. The encoding indicates the corresponding bit position of the error in the thermal error status register.
2	RV	0	Reserved
1:0	ROST	0	**Thermal Error Status Log 0 and 1** The error status log indicates which error is causing the report of the **first error event**. The encoding indicates the corresponding bit position of the error in the thermal error status register.

21.8.3.3 THRNNERRST: Thermal Non-Fatal NERR Status

Register: THRNNERRST
Device: 20
Function: 2
Offset: 374h

Bit	Attr	Default	Description
31:4	RV	0	Reserved
3	ROS	0	**Thermal Error Status Log 3** The error status log indicates which error is causing the report of the **second error event**. The encoding indicates the corresponding bit position of the error in the thermal error status register. ***Note:*** If the same error occurs before the FERR status register bit is cleared, it is logged again in the NERR status register. ***Note:*** Only second error gets logged into THRFNERRST (subsequent error does not get logged into THRFNERRST.
2	RV	0	Reserved
1:0	ROST	0	**Thermal Error Status Log 0 and 1** The error status log indicates which error is causing the report of the **second error event**. The encoding indicates the corresponding bit position of the error in the thermal error status register. ***Note:*** If the same error occurs before the FERR status register bit is cleared, it is logged again in the NERR status register. ***Note:*** Only second error gets logged into THRFNERRST (subsequent error does not get logged into THRFNERRST.

21.8.3.4 THRERRCNTSEL: Thermal Error Counter Selection

Register: THRERRCNTSEL
Device: 20
Function: 2
Offset: 378h

Bit	Attr	Default	Description
31:3	RV		Reserved
2	RW	0	**F2 - Catastrophic Thermal Event**
1	RW	0	**F1 - TSMAX Updated**
0	RW	0	**F0 - Thermal Alert**

21.8.3.5 THRERRCNT: Thermal Error Counter

Register: THRERRCNT Device: 20 Function: 2 Offset: 37Ch			
Bit	**Attr**	**Default**	**Description**
31:8	RV		Reserved
7	RW1CS		**ERROVF: Error Accumulator Overflow** 0: No overflow occurred 1: Error overflow. The error count may not be valid.
6:0	RW1CS	0	**ERRCNT: Error Accumulator** This counter accumulates errors that occur when the associated error type is selected in the ERRCNTSEL register. This register is cleared by writing 7Fh. Maximum counter available is 127d (7Fh).

21.8.4 MIERRST: Miscellaneous Error Status

This register indicates the miscellaneous errors detected by the IOH error logic. An individual error status bit that is set indicates that a particular error occurred; software may clear an error status by writing a 1 to the respective bit. This register is sticky and can only be reset by PWRGOOD. Clearing of the MI**ERRST is done by clearing the corresponding MIERRST bits. For details on usage of local error logging.

Register: MIERRST Device: 20 Function: 2 Offset: 380h			
Bit	**Attr**	**Default**	**Description**
31:4	RV	0	Reserved
3	RW1CS	0	**23 - Virtual Pin Port Error Status** This bit indicates that VPP Interface has detected an error. This bit is N/A in 0E80, 0F80h registers
2	RW1CS	0	**22 - JTAG TAP Port Status** This bit (set to 1) indicates that an error occurred on the JTAG TAP port. This bit is N/A in 0E80, 0F80h registers
1	RW1CS	0	**21 - SM Bus Port Error Status** This bit indicates that SMBus Interface has detected an error. This bit is N/A in 0E80, 0F80h registers
0	RW1CS	0	**20 - IOH Configuration Register Parity Error Status** This bit indicates that IOH configuration registers have detect a parity error on its critical configuration bits. This bit is N/A in 0E80, 0F80h registers

21.8.4.1 MIERRCTL: Miscellaneous Error Control

This register controls the reporting of miscellaneous errors detected by the IOH error logic. Setting of the bit enables the setting of the corresponding error status bit in MIERRST register. If the bit is cleared, the corresponding error status will not be set. This register is sticky and can only be reset by PWRGOOD.

Register: MIERRCTL
Device: 20
Function: 2
Offset: 384h

Bit	Attr	Default	Description
31:4	RV	0	Reserved
3	RWS	0	**23 - VPP Error Enable**
2	RWS	0	**22 - Persistent JTAG Error Enable**
1	RWS	0	**21 - Persistent SMBus Retry Status Enable**
0	RWS	0	**20 - IOH Configuration Register Parity error Enable**

21.8.4.2 MIFFERRST: Miscellaneous Fatal FERR Status

The error status log indicates which error is causing the report of the **first error event**.

Note: If two non-fatal errors occur in the same cycle, both errors will be logged.

21.8.4.3 MIFFERRHD: Miscellaneous Fatal FERR Header

Register: MIFFERRHD
Device: 20
Function: 2
Offset: 38Ch

Bit	Attr	Default	Description
127:0	ROS	0	**Miscellaneous Error Header log** Header log stores the IOH data path header information of the associated IOH miscellaneous error. The header indicates where the error is originating from and the address of the cycle. [127:44] Reserved [43:0] Address [43:0]

21.8.4.4 MIFNERRST: Miscellaneous Fatal NERR Status

The error status log indicates which error is causing the report of the **next error event**.

Note: If the same error occurs before the FERR status register bit is cleared, it is logged again in the NERR status register.

Note: Only second error gets logged into MIFNERRST (subsequent error does not get logged into MIFNERRST.

21.8.4.5 MINFERRST: Miscellaneous Non-Fatal FERR Status

The error status log indicates which error is causing the report of the **first error event**.

Note: If two non-fatal errors occur in the same cycle, both errors will be logged.

Register: MINFERRST Device: 20 Function: 2 Offset: 3A0h			
Bit	**Attr**	**Default**	**Description**
31:4	RV	0	Reserved
3	ROS	0	**23 - Virtual Pin Port Error Status**
2	ROS	0	**22 - JTAG TAP Port Status**
1	ROS	0	**21 - SM Bus Port Error Status**
0	ROS	0	**20 - IOH Configuration Register Parity Error Status**

21.8.4.6 MINFERRHD: Miscellaneous Local Non-Fatal FERR Header

Register: MINFERRHD Device: 20 Function: 2 Offset: 3A4h			
Bit	**Attr**	**Default**	**Description**
127:0	ROS	0	Miscellaneous Error Header log Header log stores the IOH data path header information of the associated IOH miscellaneous error. The header indicates where the error is originating from and the address of the cycle. [127:46] Reserved [43:0] Address [43:0]

21.8.4.7 MINNERRST: Miscellaneous Non-Fatal NERR Status

The error status log indicates which error is causing the report of the **next error event**.

Note: If the same error occurs before the FERR status register bit is cleared, it is logged again in the NERR status register.

Note: Only second error gets logged into MIFNERRST (subsequent error does not get logged into MIFNERRST.

Register: MINNERRST Device: 20 Function: 2 Offset: 3B4h			
Bit	**Attr**	**Default**	**Description**
31:4	RV	0	Reserved
3	ROS	0	**23 - Virtual Pin Port Error Status**
2	ROS	0	**22 - JTAG TAP Port Status**
1	ROS	0	**21 - SM Bus Port Error Status**
0	ROS	0	**20 - IOH Configuration Register Parity Error Status**

21.8.4.8 MIERRCNTSEL: Miscellaneous Error Counter Selection

Register: MIERRCNTSEL
Device: 20
Function: 2
Offset: 3BCh

Bit	Attr	Default	Description
31:4	RV	0	Reserved
3	RW	0	**23 - VPP Error CNTSEL** 0 - Do not select this error type for error counting 1 - Select this error type for error counting
2	RW	0	**22 - Persistent JTAG Error** CNTSEL 0 - Do not select this error type for error counting 1 - Select this error type for error counting
1	RW	0	**21 - Persistent SMBus Retry Status CNTSEL** 0 - Do not select this error type for error counting 1 - Select this error type for error counting
0	RW	0	**20 - IOH Configuration Register Parity Error Status** This bit indicates that IOH configuration registers have detect a parity error on its critical configuration bits. This bit is N/A in 0E80, 0F80h registers

21.8.4.9 MIERRCNT: Miscellaneous Error Counter

Register: MIERRCNT
Device: 20
Function: 2
Offset: 3C0h

Bit	Attr	Default	Description
31:8	RV	0	Reserved
7	RW1CS	0	**ERROVF: Error Accumulator Overflow** 0: No overflow occurred 1: Error overflow. The error count may not be valid.
6:0	RW1CS	0	**ERRCNT: Error Accumulator** This counter accumulates errors that occur when the associated error type is selected in the ERRCNTSEL register. This register is cleared by writing 7Fh. Maximum counter available is 127d (7Fh).

21.8.5 QPI[1:0]FERRFLIT0: Intel QuickPath Interconnect FERR FLIT log Register 0

See Section 21.8.1.1 to find out which errors caused the FLIT logging.

Register: QPI[1:0]FERRFLIT0 Device: 20 Function: 2 Offset: 480h, 400h			
Bit	**Attr**	**Default**	**Description**
95:81	RV	0	Reserved
80	ROS	0	ACTIVE_16B
79:0	ROS	0	FLIT

21.8.5.1 QPI[1:0]FERRFLIT1: Intel QuickPath Interconnect FERR FLIT log Register 1

See Section 21.8.1.1 to find out which errors caused the FLIT logging.

Register: QPI[1:0]FERRFLIT1 Device: 20 Function: 2 Offset: 48Ch, 40Ch			
Bit	**Attr**	**Default**	**Description**
95:81	RV	0	Reserved
80	ROS	0	ACTIVE_16B
79:0	ROS	0	FLIT

21.8.5.2 QPIP[1:0]FERRLFLIT0: Intel QuickPath Interconnect Protocol FERR Logical FLIT log Register 0

This register is used to log when Intel QPI Protocol Layer Detects unsupported/ undefined packet errors.

Register: QPIP[1:0]FERRLFLIT0 Device: 20 Function: 2 Offset: 4B0h, 430h			
Bit	**Attr**	**Default**	**Description**
95:72	RV	0	Reserved
71:0	ROS	0	LFLIT: Intel QPI Logical FLIT Format is the format of Intel QuickPath Interconnect.

21.8.5.3 QPIP[1:0]FERRLFLIT1: Intel QuickPath Interconnect Protocol FERR Logical FLIT log Register 1

This register is used to log when Intel QPI Protocol Layer Detects unsupported/ undefined packet errors.

Register: QPIP[1:0]FERRLFLIT1
Device: 20
Function: 2
Offset: 4BCh, 43Ch

Bit	Attr	Default	Description
95:72	RV	0	Reserved
71:0	ROS	0	LFLIT: Intel QPI Logical FLIT Format is the format of Intel QuickPath Interconnect.

21.8.5.4 QPIP[1:0]FERRLFLIT2: Intel QuickPath Interconnect Protocol FERR Logical FLIT log Register 2

This register is used to log when Intel QuickPath Interconnect Protocol Layer Detects unsupported/undefined packet errors.

Register: QPIP[1:0]FERRLFLIT2
Device: 20
Function: 2
Offset: 4C8h, 448h

Bit	Attr	Default	Description
95:72	RV	0	Reserved
71:0	ROS	0	LFLIT: Intel QPI Logical FLIT Format is the format of Intel QuickPath Interconnect.

21.9 On-Die Throttling Register Map and Coarse-Grained Clock Gating

Table 21-18. Device 20, Function 3: On-Die Throttling and Coarse-Grained Clock Gating

DID	VID			00h					80h
PCISTS	PCICMD			04h					84h
CCR			RID	08h					88h
	HDR			0Ch					8Ch
				10h					90h
				14h					94h
				18h					98h
				1Ch					9Ch
				20h					A0h
				24h					A4h
				28h					A8h
SID	SVID			2Ch					ACh
				30h					B0h
				34h					B4h
				38h					B8h
				3Ch					BCh
				40h					C0h
				44h					C4h
				48h					C8h
				4Ch					CCh
				50h					D0h
				54h					D4h
				58h					D8h
				5Ch					DCh
				60h	TSTHRCATA				E0
				64h					E4h
				68h			TSCTRL		E8h
				6Ch	TSTHRHI		TSTHRLO		ECh
				70h	TSFSC	CTHINT			F0h
				74h	CTCTRL		TSTHRRQPI	CTSTS	F4h
				78h				TSTIMER	F8h
				7Ch	TSTHRNOMC				FCh

21.9.1 On-Die Throttling Registers

21.9.1.1 TSTHRCATA: On-Die Thermal Sensor Catastrophic Threshold Register

Register: TSTHRCATA
Device: 20
Function: 3
Offset: E2h

Bit	Attr	Default	Description
15:9	RV	0h	Reserved
8:0	RWO	DCh	**TSTHRCATALM: Thermal Sensor Threshold Catastrophic Limit** The field is initialized by software to set the "catastrophic" threshold for the Thermal sensor logic. Resolution of this register is 0.5^{o}C. Default value is 110°C. i.e DCh (220d).

21.9.1.2 TSVAL: On-Die Thermal Sensor Output Value Register

Register: TSVAL
Device: 20
Function: 3
Offset: E4h

Bit	Attr	Default	Description
15:9	RV	0h	Reserved
8:0	RO	DCh	**TSOUTVAL: Thermal Sensor Output Value** This field contains the temperature value from the thermal sensor. The output of the thermal sensor is latched in this register based on the settings of the TSCTRL register. This register has a resolution of 0.5^{o}C. Hence, a register value in the range of 0 to 255 (decimal) refers to a temperature range of 0 to 127.5^{o}C.

21.9.1.3 TSCTRL: On-Die Thermal Sensor Control Register

Register: TSCTRL
Device: 20
Function: 3
Offset: E8h

Bit	Attr	Default	Description
15	RW	0h	Therm alert / trip logic selector. Refer to the Intel® 7500 Chipset BIOS specification for setting information.
14	RW	0h	**BGTRIPSELECT:** BandGap Trip Select. This bit selects either the hot or catastrophic trip output of the Sensor. 0: Hot trip 1: Catastrophic trip
13:10	RV	0h	Reserved
9	RW	0h	**SWTHROTTLE:** Software Throttle. 0: Software throttling is disabled. TSDIS gates throttling. 1: Throttling is forced to all interfaces. THERMALERT_N is asserted.
8	RW	0h	**TSDIS:** Thermal Sensor Throttling Disable. 0: The thermal sensor determines closed-loop thermal throttling events when SWTHROTTLE = 0. 1: Thermal sensor throttling is disabled. SWTHROTTLE controls throttling.

Register: TSCTRL Device: 20 Function: 3 Offset: E8h			
Bit	**Attr**	**Default**	**Description**
7	RW1CS	0	**STSEVHI:** Status Event High 0: Thermal sensor event/interrupt is not generated by the sensor logic 1: Thermal sensor event/interrupts is set when the thermal sensor high threshold trip point is crossed.
6	RW1CS	0	**STSEVLO:** Status Event Low 0: Thermal sensor event/interrupt is not generated by the sensor logic. 1: Thermal sensor event/interrupts is set when the thermal sensor low threshold trip point is crossed.
5:0	RV	0	Reserved

21.9.1.4 TSTHRLO: On-Die Thermal Sensor Low Threshold Register

Register: TSTHRLO Device: 20 Function: 3 Offset: ECh			
Bit	**Attr**	**Default**	**Description**
15:9	RV	0h	Reserved
8:0	RW	B4h	TSTHRLOLM: Thermal Sensor Threshold Low Limit The field is initialized by software to set the “low” threshold mark for the thermal sensor logic. (Tsr_lo). Resolution of this register is 0.5^{o}C. Two’s-complement binary, range of -128°C to 127.5^{o}C Default value is 90°C. i.e B4h (180d)

21.9.1.5 TSTHRHI: On-Die Thermal Sensor High Threshold Register

Register: TSTHRHI Device: 20 Function: 3 Offset: EEh			
Bit	**Attr**	**Default**	**Description**
15:9	RV	0h	Reserved
8:0	RW	0C8h	TSTHRHILM: Thermal Sensor Threshold High Limit The field is initialized by software to set the “high” threshold for the Thermal sensor logic. (Tsr_hi) Resolution of this register is 0.5^{o}C. Two’s-complement binary, range of -128°C to 127.5^{o}C Default value is 100°C. i.e C8h (200d)

21.9.1.6 CTHINT: On-Die Throttling Hint Register

Register: CTHINT
Device: 20
Function: 3
Offset: F0h

Bit	Attr	Default	Description
23:17	RV	0h	Reserved
16	RO	0h	**OVFLO:** Hint Overflow 0: Eight or less THERMALERT windows have elapsed since the last time this register was read while CTCTRL.HINTEN was set. 1: More than eight THERMALERT windows have elapsed since the last time this register was read while CTCTRL.HINTEN was set, and THROTTLED hints were lost.
15:8	RO	0h	VALID: Maximum Cooling List of valid throttle-histories. Each bit corresponds to its “THROTTLED” bit. Cleared on read (but delivered intact to reading agent).
7:0	RO	0h	THROTTLED: Maximum Cooling History of on-die throttling during the last eight consecutive “THERMALERT” windows. If on-die throttling occurred during a THERMALERT window, then its throttle history bit is set

21.9.1.7 TSFSC: On-Die Thermal Sensor Fan-Speed-Control Register

This register provides the ability to read a relative thermal sensor indication.

Register: TSFSC
Device: 20
Function: 3
Offset: F3h

Bit	Attr	Default	Description
7:0	RO	0h	TSFSC: Thermal Sensor Fan Speed Control This field contains the difference between the die temperature and the maximum permissible die temperature. This register has a resolution of 0.5^{o}C. Hence, a register value in the range of 0 to 127 (decimal) refers to a temperature difference of 0 to 63.5^{o}C, and a value in the range of 128 to 255 (decimal) refers to a temperature difference of -64°C to 0.5^{o}C. Positive values indicate that the die temperature is lower than the maximum permissible die temperature. A negative difference beyond -64°C “floors” at -64°C. A positive difference beyond 63.5^{o}C “ceilings” at 63.5^{o}C.

21.9.1.8 CTSTS: On-Die Throttling Status Register

Register: CTSTS
Device: 20
Function: 3
Offset: F4h

Bit	Attr	Default	Description
7:2	RV	0h	Reserved
1	RW1CS	0	THRMALRT: On-Die Throttling Event
0	RW1CS	0	**THRMTRIP: Catastrophic Thermal Event**

21.9.1.9 TSTHRRQPI: Intel QuickPath Interconnect Throttling Threshold Ratio Register

This register provides the ability to vary the amount/ratio of port throttling for the Intel QuickPath Interconnect.

Register: TSTHRRQPI
Device: 20
Function: 3
Offset: F5h

Bit	Attr	Default	Description
7:3	RV	0h	Reserved
2:0	RW	000	TTQPIR: Intel QuickPath Interconnect Throttle Ratio This register sets the throttling ratio for the processor buses.This setting is an approximate percentage of peak theoretical request bandwidth for this interface. Value ThrottleLevel PeakBandwidth 000: 00.0% 100.0% Normal Unthrottled setting 001: 50.0% 50.0% 010: Reserved 011: Reserved 100: Reserved 101: Reserved 110: Reserved 111: Reserved

21.9.1.10 CTCTRL: On-Die Throttling Control Register

Register: CTCTRL
Device: 20
Function: 3
Offset: F7h

Bit	Attr	Default	Description
7:4	RV	0h	Reserved
3	RW	0	**NOBMC: No BMC Mode** '1: TSTHRHI and TSTHRLO drive THERMALERT#. TSTHRNOBMC drives throttling. '0: TSTHRHI and TSTHRLO drive THERMALERT#. TSTHRHI and TSTHRLO also drive throttling, TSTHRNOBMC is un-used.
2	RV	0h	Reserved
1	RW	0h	HINTEN: On-Die Throttle Hint Enable When this bit is set, on-die throttling hints are enabled.
0	RW	0	NOMAX: Initialize Throttling Mode. Set then clear this bit to initialize the throttling threshold.

21.9.1.11 TSTIMER: On-Die Thermal Sensor Timer Control

Register: TSTIMER Device: 20 Function: 3 Offset: F8h			
Bit	**Attr**	**Default**	**Description**
31:30	RV	0h	Reserved
29:20	RW	7dh	FILTER: THERMALERT_N Filter Period Each increment represents one PRESCALER interval. The THERMALERT_N pin updates follow the period specified by this field. (default is 125 for 62.5 ms at 500 us prescaler).
19:0	RW	30d40h	PRESCALER: Thermal Sensor Sample Period Each increment represents one core cycle. Thermal sensor updates follow the period specified by this field. (default is 200,000 for 500 us at 400 MHz core).

21.9.1.12 TSTHRNOBMC: On-Die Thermal Sensor Throttling Threshold Register for NOBMC Mode

Register: TSTHRNOBMC Device: 20 Function: 3 Offset: FEh			
Bit	**Attr**	**Default**	**Description**
15:9	RV	0h	Reserved
8:0	RW	0h	TSTHRNOBMCLM: Thermal Sensor Threshold Throttling Limit The field is initialized by software to set the throttling threshold for the Thermal sensor logic when CTCTRL.NOBMC=1. Resolution of this register is 0.5oC. Two's-complement binary, range of -128oC to 127.5oC

21.10 Intel QuickPath Interconnect Register Map

Registers assigned to the Link or Physical layers of Intel QuickPath Interconnect need an independent register set per Intel QuickPath Interconnect port. This requires that each register belonging to physical or link be duplicated for each port. QPI[0]RegName is assigned to Intel QuickPath Interconnect port 0 and QPI[1]RegName is assigned to Intel QuickPath Interconnect port 1.

All registers for the routing and protocol layers are defined as a single register, no duplication.

Many control registers that have restrictions on when the register can be modified. If there is a restriction it will be mentioned in the register description, and generally applies to the entire register. The two possibilities for restrictions are: at boot time only, or during quiescence. At boot time only refers to the time immediately following Reset deassertion before any non-configuration requests are flowing within the IOH. During quiescence is a state where only configuration accesses are flowing in the Intel QuickPath Interconnect network, this is generally used for hot-plug type operations.

21.11 Intel QuickPath Interconnect Link Layer Registers

The Link layer registers are defined per Intel QuickPath Interconnect port. There is a special attribute on some link layer registers to handle the Link layer specific reset. The Link layer only hard and soft reset. 'K' attribute indicates that the register is reset on a Link layer hard reset. 'KK' indicates that the register is reset on any Link layer reset (hard or soft).

Table 21-19. Intel QuickPath Interconnect Link Map Port 0 (Dev 16), Port 1 (Dev 17)

DID		VID		00h		80h
PCISTS		PCICMD		04h		84h
CCR			RID	08h		88h
	HDR		CLS	0Ch		8Ch
				10h		90h
				14h		94h
				18h		98h
				1Ch		9Ch
				20h		A0h
				24h		A4h
				28h		A8h
SID		SVID		2Ch		ACh
				30h		B0h
			CAPPTR[1]	34h		B4h
				38h		B8h
		INTP	INTL	3Ch		BCh
				40h	QPILCP	C0h
				44h	QPILCL	C4h
				48h	QPILS	C8h
				4Ch	QPILP0	CCh
				50h	QPILP1	D0h
				54h	QPILP2	D4h
				58h	QPILP3	D8h
QPI[1:0]AGTIDEN				5Ch	QPILPOC0	DCh
				60h	QPILPOC1	E0h
				64h	QPILPOC2	E4h
				68h	QPILPOC3	E8h
				6Ch		ECh
				70h	QPILTC	F0h
				74h	QPILTS	F4h
				78h	QPILCRDC	F8h
				7Ch		FCh

Notes:

1. CAPPTR points to the first capability block

21.11.1 Intel QuickPath Interconnect Link Layer Register Tables

21.11.1.1 QPI[1:0]AGTIDEN: Intel QuickPath Interconnect Agent ID Enable Register

Register: QPI[1:0]AGTIDEN
Device: 17, 16
Function: 0
Offset: 5Ch

Bit	Attr	Default	Description
31:2	RV	0	Reserved
1	RWS	0	TXAGNTIDEN: Enables transmitting Agent ID in the header 0: Normal operation. 1: Enable debug information to be inserted in the address field [42:40]
0	RWS	1	RXAGNTIDEN: Enables receiving Agent ID in the header When this bit is enabled the address bit field [42:40] will be ignored. 0: Normal operation. 1: Enable agent ID debug information to used in place of the address field [42:40]. When enabled the IOH does not decode this bit field as address information.

21.11.1.2 QPI[1:0]LCP: Intel QuickPath Interconnect Link Capability

Register per Intel QuickPath Interconnect port.

Register: QPI[1:0]LCP
Device: 17, 16
Function: 0
Offset: C0h

Bit	Attr	Default	Description
31:30	RV	0	Reserved
29:28	RO	0	**VN1 credits per supported Data VC** 00 - 0 Credits (unsupported) 01 - 1 credit 10 - 2 to 8 credits 11 - 9+ credits
27:26	RO	2h	**VN0 credits per supported Data VC** 00 - 0 credits (unsupported) 01 - 1 credit 10 - 2 to 8 credits 11 - 9+ credits Max value for VN0 is reflected in this register. Actual value is set by a different register.
25:24	RO	0	**VN1 credits per supported non-data VC** 00 - 0 Credits (unsupported) 01 - 1 credit 10 - 2 to 8 credits 11 - 9+ credits
23:22	RO	2h	**VN0 credits per supported non-data VC** 00 - 0 credits (unsupported) 01 - 1 credit 10 - 2 to 8 credits 11 - 9+ credits Max value for VN0 is reflected in this register. Actual value is set by a different register.

Register: QPI[1:0]LCP Device: 17, 16 Function: 0 Offset: C0h			
Bit	**Attr**	**Default**	**Description**
21:16	RO	16h	**VNA Credits** Counted by 8s, rounded up. Max value for VNA is reflected in this register. Actual value is set by a different register.
15:12	RV	0	Reserved
11	RO	1	**CRC Mode supported** 0 - 8b CRC 1 - 8b CRC & 16b Rolling CRC
10	RO	0	**Scheduled data Interleave** 0 - Not Support 1 - Support
9:8	RO	0	**Flit Interleave** 00 - Idle flit only (default) 01 - Command insert interleave in data stream 1x -Reserved
7:0	RO	0	**Intel QPI Version number** 0h - rev 1.0 !0h - reserved

21.11.1.3 QPI[1:0]LCL: Intel QuickPath Interconnect Link Control

Register per Intel QuickPath Interconnect port. This register is used for control of Link layer.

Register: QPI[1:0]LCL Device: 17, 16 Function: 0 Offset: C4h			
Bit	**Attr**	**Default**	**Description**
31:22	RV	0	Reserved
21	RWD	0	L1 Master/Slave Controls link L1 mode of operation. 0 - Slave 1 - Master
20	RWD	0	L1 enable Bit is ANDed with the parameter exchanged value for L1 to determine if the link may enter L1. 0 - disable 1 - enable Note: This is NOT a bit that determines the capability of a device.
19	RO	0	L0p enable L0p not supported by IOH
18	RWD	0	L0s enable Bit is ANDed with the parameter exchanged value for L0s to determine if the link may enter L0s. 0 - disable 1 - enable ***Note:*** This is NOT a bit that determines the capability of a device.

Register: QPI[1:0]LCL Device: 17, 16 Function: 0 Offset: C4h			
Bit	**Attr**	**Default**	**Description**
17	RWD	0	**Link Layer Initialization stall at Ready_For_Normal:** Note: this bit is set and cleared only by software (no hardware clearing is supported). 0 - disable 1 - enable, stall initialization till this bit is cleared.
16	RWD	0	**Link Layer Initialization stall at Ready_For_Init:** Note: this bit is set and cleared only by software (no hardware clearing is supported). 0 - disable 1 - enable, stall initialization till this bit is cleared.
15:14	RWD	0	**CRC mode** (on next initialization) 00 - 8b CRC 01 - 16b rolling CRC, only enabled if peer agent also supports in Parameter0 1X - Reserved
13:12	RV	0	Reserved
11:10	RWD	0	**Advertised VN0 credits per supported VC** (on next initialization) 00 - Max 01 - 2 if <Max 10 - 1 if <Max 11 - 0 Disabled VN0 (Can cause deadlock)
9:8	RWD	0	**Advertised VNA credits** (on next initialization) 00 - Max 01 - 64 if <Max 10 - 32 if <Max 11 - 0 Disable VNA
7:6	RWD	0	**Link Layer Retry (LLR) Timeout value in terms of flits recieved** 00 – 4095 flits 01 – 1023 flits 10 – 255 flits 11 – 63 flits
5:4	RWD	0	**Consecutive LLRs to Link Reset** 00 - 16 01 - 8 10 - 4 11 - 0, disable LLR (If CRC error then error condition immediately)
3:2	RWD	0	**Consecutive Link Reset from LLR till error condition** (only applies if LLR enabled) 00 - up to 2 01 - up to 1 10 - up to 0 11 - Reserved
1	RW	0	**Link Hard Reset** Re-initialize clearing the values in all link layer registers including Sticky. Write 1 to reset link - this is a destructive reset - when reset asserts, register clears to 0.
0	RW	0	**Link Soft Reset** Re-initialize clearing the values in all link layer registers except Sticky. Write 1 to reset link - this is a destructive reset - when reset asserts, register clears to 0.

21.11.1.4 QPI[1:0]LS: Intel QuickPath Interconnect Link Status

Register per Intel QuickPath Interconnect port. This register for holding link status and peer agent info.

Register: QPI[1:0]LS
Device: 17, 16
Function: 0
Offset: C8h

Bit	Attr	Default	Description
31	RV	0	Reserved
30:28	RO	0h	**Link Layer Retry Queue Allocation** Flits allocated 000 - 0 to 7 001 - 8 to 15 010 - 16 to 31 011 - 32 to 63 100 - 64 to 95 101 - 96 to 127 110 - 128 to 191 111 - 192 to 255
27:24	RO	0h	**Link Initialization status** 0000 - Waiting for Physical Layer Ready 0001 - Internal Stall Link Initialization 0010 - Sending ReadyForInit 0011 - Parameter Exchange 0100 - Sending ReadyForNormalOperation 0101 - Reserved 0110 - Normal Operation 0111 - Link Level Retry 1000 - Link Error 1001 = Parameter Exchange Done 1010 = WaitForNormal 1011 = LocalLinkReset 11XX, 1001, 101X - Reserved
23:22	RO	0	**Link initialization Failure Count - Saturates at 011** All Link Init state machine arcs going into RDY_FOR_INIT excluding the arcs from NOT_RDY_FOR_INIT and from NORMAL_OPERATION. 00 - 0 01 - 1 10 - 2-15 11 - >15
21	RO	0	**Last Link Level Retry NUM_PHY_REINIT- Saturates at 1** Number of Phy ReInits since last Link Init 0: 0 1: 1+
20-19	RO	0	**Last Link Level Retry Count - Saturates at 011** Number of Retries since last Link Init or Phy Reinit 000 - 0 001 - 1 010 - 2-15 011 - >15

Register: QPI[1:0]LS
Device: 17, 16
Function: 0
Offset: C8h

Bit	Attr	Default	Description
18:16	RO	0h	**VNA credits at receiver** VNA available credits for remote device to use in transmission of packets to IOH. 000 - 0 credits 001 - 1-7 credits 010 - 8-11 credits 011 - 12-15 credits 100 - 16-31 credits 101 - 32-63 credits 110 - 64-127 credits 111 - 128+ credits
15	RO	0h	**VN0 Snp Credits at receiver** VNA available credits for remote device to use in transmission of packets to IOH. 0 - 0 Credits 1 - 1+ Credits
14	RO	0h	**VN0 Hom Credits at receiver** 0 - 0 Credits 1 - 1+ Credits
13	RO	0h	**VN0 NDR Credits at receiver** VNA available credits for remote device to use in transmission of packets to IOH. 0 - 0 Credits 1 - 1+ Credits
12	RO	0h	**VN0 DRS Credits at receiver** VNA available credits for remote device to use in transmission of packets to IOH. 0 - 0 Credits 1 - 1+Credits
11	RO	0h	**VN0 NCS Credits at receiver** VNA available credits for remote device to use in transmission of packets to IOH. 0 - 0 Credits 1 - 1+ Credits
10	RO	0h	**VN0 N Credits at receiver** VNA available credits for remote device to use in transmission of packets to IOH. 0 - 0 Credits 1 - 1+Credits
9:8	RV	0h	*Reserved*
7	RV	0	*Reserved*. Context shown for other components that support VN1. VN1 Snp Credits at receiver 0: 0 Credits 1: >0 Credits
6	RV	0	*Reserved*. Context shown for other components that support VN1. VN1 Hom Credits at receiver 0: 0 Credits 1: >0 Credits
5	RV	0	*Reserved*. Context shown for other components that support VN1. VN1 NDR Credits at receiver 0: 0 Credits 1: >0 Credits

Register: QPI[1:0]LS Device: 17, 16 Function: 0 Offset: C8h			
Bit	**Attr**	**Default**	**Description**
4	RV	0	*Reserved*. Context shown for other components that support VN1. VN1 DRS Credits at receiver 0: 0 Credits 1: >0 Credits
3	RV	0	*Reserved*. Context shown for other components that support VN1. VN1 NCS Credits at receiver 0: 0 Credits 1: >0 Credits
2	RV	0	*Reserved*. Context shown for other components that support VN1. VN1 NCB Credits at receiver 0: 0 Credits 1: >0 Credits
1:0	RV	0	*Reserved*.

21.11.1.5 QPI[1:0]LP0: Intel QuickPath Interconnect Link Parameter0

Register per Intel QuickPath Interconnect port. Parameter is exchanged as part of link initialization.

Register: QPI[1:0]LP0 Device: 17, 16 Function: 0 Offset: CCh			
Bit	**Attr**	**Default**	**Description**
31:0	RONN	0	**Parameter 0 from peer agent**

21.11.1.6 QPI[1:0]LP1: Intel QuickPath Interconnect Link Parameter1

Register per Intel QuickPath Interconnect port. Parameter is exchanged as part of link initialization.

Register: QPI[1:0]LP1 Device: 17, 16 Function: 0 Offset: D0h			
Bit	**Attr**	**Default**	**Description**
31:0	RONN	0	Parameter 1 from peer agent

21.11.1.7 QPI[1:0]LP2: Intel QuickPath Interconnect Link Parameter2

Register per Intel QuickPath Interconnect port. Parameter is exchanged as part of link initialization.

Register: QPI[1:0]LP2
Device: 17, 16
Function: 0
Offset: D4h

Bit	Attr	Default	Description
31:0	RONN	0	**Parameter 2 from peer agent**

21.11.1.8 QPI[1:0]LP3: Intel QuickPath Interconnect Link Parameter3

Register per Intel QuickPath Interconnect port. Parameter is exchanged as part of link initialization.

Register: QPI[1:0]LP3
Device: 17, 16
Function: 0
Offset: D8h

Bit	Attr	Default	Description
31:0	RONN	0	**Parameter 3 from peer agent**

21.11.1.9 QPI[1:0]LPOC0: Intel QuickPath Interconnect Link POC0

Register per Intel QuickPath Interconnect port. POC that was recieved as part of link initialization.

Register: QPI[1:0]LPOC0
Device: 17, 16
Function: 0
Offset: DCh

Bit	Attr	Default	Description
31:0	RONN	0	POC 0 from peer agent

21.11.1.10 QPI[1:0]LPOC1: Intel QuickPath Interconnect Link POC1

Register per Intel QuickPath Interconnect port. POC that was recieved as part of link initialization.

Register: QPI[1:0]LPOC1
Device: 17, 16
Function: 0
Offset: E0h

Bit	Attr	Default	Description
31:0	RONN	0	POC 1 from peer agent

21.11.1.11 QPI[1:0]LPOC2: Intel QuickPath Interconnect Link POC2

Register per Intel QuickPath Interconnect port. POC that was recieved as part of link initialization.

Register: QPI[1:0]LPOC2 Device: 17, 16 Function: 0 Offset: E4h			
Bit	**Attr**	**Default**	**Description**
31:0	RONN	0	**POC 2 from peer agent**

21.11.1.12 QPI[1:0]LPOC3: Intel QuickPath Interconnect Link POC3

Register per Intel QuickPath Interconnect port. POC that was recieved as part of link initialization

Register: QPI[1:0]LPOC3 Device: 17, 16 Function: 0 Offset: E8h			
Bit	**Attr**	**Default**	**Description**
31:0	RONN	0	**POC 3 from peer agent**

21.11.1.13 QPI[1:0]LCL_LATE: Intel QuickPath Interconnect Link Control Late Action

This register is a mirrored copy of the "QPI[1:0]LCL: Intel QuickPath Interconnect Link Control" that have the 'D' attribute. The value is captured at Link Layer initialization. These are the late action values that are currently active in the Link Layer.

Register: QPI[1:0]LCL_LATE Device: 17, 16 Function: 0 Offset: F0h			
Bit	**Attr**	**Default**	**Description**
31:22	RV	0	Reserved
21	RO	0	**L1 Master/Slave** This is a RO copy of the same bits in the "QPI[1:0]LCL: Intel QuickPath Interconnect Link Control" register. See its definition for details.
20	RO	0	**L1 enable** This is a RO copy of the same bits in the "QPI[1:0]LCL: Intel QuickPath Interconnect Link Control" register. See its definition for details.
19	RO	0	**L0p enable** This is a RO copy of the same bits in the "QPI[1:0]LCL: Intel QuickPath Interconnect Link Control" register. See its definition for details. Note: L0p is not supported.
18	RO	0	**L0s enable** This is a RO copy of the same bits in the "QPI[1:0]LCL: Intel QuickPath Interconnect Link Control" register. See its definition for details.
17:16	RV	0	Reserved
15:14	RO	0	**CRC mode** This is a RO copy of the same bits in the "QPI[1:0]LCL: Intel QuickPath Interconnect Link Control" register. See its definition for details.
13:12	RV	0	*Reserved*
11:10	RO	0	**Advertised VN0 credits per supported VC:** (on next initialization) This is a RO copy of the same bits in the "QPI[1:0]LCL: Intel QuickPath Interconnect Link Control" register. See its definition for details.

Register: QPI[1:0]LCL_LATE Device: 17, 16 Function: 0 Offset: F0h			
Bit	**Attr**	**Default**	**Description**
9:8	RO	0	**Advertised VNA credits:** (on next initialization) This is a RO copy of the same bits in the "QPI[1:0]LCL: Intel QuickPath Interconnect Link Control" register. See its definition for details.
7:6	RO	0	**Link Layer Retry (LLR): Timeout value in terms of flits received** This is a RO copy of the same bits in the "QPI[1:0]LCL: Intel QuickPath Interconnect Link Control" register. See its definition for details.
5:4	RO	0	**MAX_NUM_RETRY** This is a RO copy of the same bits in the "QPI[1:0]LCL: Intel QuickPath Interconnect Link Control" register. See its definition for details.
3:2	RO	0	**MAX_NUM_PHY_REINIT** This is a RO copy of the same bits in the "QPI[1:0]LCL: Intel QuickPath Interconnect Link Control" register. See its definition for details.
1:0	RV	0	Reserved0

21.11.1.14 QPI[1:0]LCRDC: Intel QuickPath Interconnect Link Credit Control

Registers controls what credits are defined for each message class on VN0 and VNA. These credits are made visible on the Intel QuickPath Interconnect during the initialize phase of in the link layer. The values programmed here must exist within the size limits defined. Incorrect programming can result in overflow of the receive queue. When returning credits on the Intel QuickPath Interconnect this register is used in conjunction with the Intel QuickPath Interconnect standard register "QPI[1:0]LCL: Intel QuickPath Interconnect Link Control" to determine how many credits are returned. In other words, the values specified in QPI[1:0]LCRDC act as the "Max" in the field descriptions for QPILCL[11:10] and QPILCL[9:8].

This value is captured and used by the Link Layer when exiting the parameter exchange. This state is referred to as "Begin Normal Operation".

Register: QPI[1:0]LCRDC Device: 17, 16 Function: 0 Offset: F8h			
Bit	**Attr**	**Default**	**Description**
31	RV	0	Reserved
30:28	RWDS	1h	**VN0 - Hom credits** Allowed values: 0-7 credits
27	RV	0	Reserved
26:24	RWDS	1h	**VN0 - NCB credits** Allowed values: 0-7 credits
23	RV	0	Reserved
22:20	RWDS	1h	**VN0 - NCS credits** Allowed values: 0-7 credits
19	RV	0	Reserved

Register: QPI[1:0]LCRDC Device: 17, 16 Function: 0 Offset: F8h			
Bit	**Attr**	**Default**	**Description**
18:16	RWDS	1h	**VN0 - NDR credits** Allowed values: 0-7 credits
15	RV	0	Reserved
14:12	RWDS	1h	**VN0 - DRS credits** Allowed values: 0-7 credits
11	RV	0	Reserved
10:8	RWDS	1h	**VN0 - Snp credits** Allowed values: 0-7 credits
7	RV	0	Reserved
6:0	RWDS	64h	**VNA credits** BIOS must set this to 64h for standard header operation. 0 - 127 credits

21.11.1.15 QPI[1:0]LCRDC_LATE: Intel QuickPath Interconnect Link Credit Control Late Action

This is a RO copy of the "QPI[1:0]LCRDC_LATE: Intel QuickPath Interconnect Link Credit Control Late Action" register. It is needed to hold the currently active value which is loaded on Link Layer Initialization.

Register: QPI[1:0]LCRDC_LATE Device: 17, 16 Function: 0 Offset: FCh			
Bit	**Attr**	**Default**	**Description**
31	RV	0	Reserved
30:28	RO	1h	**VN0 Hom credits** This is a RO copy of the same bits in the "QPI[1:0]LCRDC: Intel QuickPath Interconnect Link Credit Control" register. See its definition for details.
27	RV	0	Reserved
26:24	RO	1h	**VN0 NCB credits** This is a RO copy of the same bits in the "QPI[1:0]LCRDC: Intel QuickPath Interconnect Link Credit Control" register. See its definition for details.
23	RV	0	Reserved
22:20	RO	1h	**VN0 NCS credits** This is a RO copy of the same bits in the "QPI[1:0]LCRDC: Intel QuickPath Interconnect Link Credit Control" register. See its definition for details.
19	RV	0	Reserved
18:16	RO	1h	**VN0 NDR credits** This is a RO copy of the same bits in the "QPI[1:0]LCRDC: Intel QuickPath Interconnect Link Credit Control" register. See its definition for details.
15	RV	0	Reserved

Register: QPI[1:0]LCRDC_LATE Device: 17, 16 Function: 0 Offset: FCh			
Bit	**Attr**	**Default**	**Description**
14:12	RO	1h	**VN0 DRS credits** This is a RO copy of the same bits in the "QPI[1:0]LCRDC: Intel QuickPath Interconnect Link Credit Control" register. See its definition for details.
11	RV	0	Reserved
10:8	RO	1h	**VN0 Snp credits** This is a RO copy of the same bits in the "QPI[1:0]LCRDC: Intel QuickPath Interconnect Link Credit Control" register. See its definition for details.
7	RV	0	Reserved
6:0	RO	0	**VNA credits** This is a RO copy of the same bits in the "QPI[1:0]LCRDC: Intel QuickPath Interconnect Link Credit Control" register. See its definition for details.

21.11.2 Intel QuickPath Interconnect Routing and Protocol Layer Registers

All Routing layer registers are used to define the routing table functionality. The routing table is used to route packets going out to the Intel QuickPath Interconnect to the correct Intel QuickPath Interconnect port. This is done based on NodeID when the table is enabled. When not enabled completions are routed to the port which their request was received, IB requests will result in an routing layer error.

Table 21-20. CSR Intel QPI Routing Layer, Protocol (Dev 16, Function 1) (Sheet 1 of 2)

DID		VID		00h	QPIPAPICSAD				80h
PCISTS		PCICMD		04h					84h
CCR			RID	08h					88h
	HDR		CLS	0Ch	QPIPDCASAD				8Ch
				10h					90h
				14h	QPIPPVGASAD				94h
				18h					98h
				1Ch	QPIPLIOSAD				9Ch
				20h					A0h
				24h	QPIPBUSSAD				A4h
				28h					A8h
SID		SVID		2Ch	QPIPSUBSAD				ACh
				30h	QPI0PORB				B0h
			CAPPTR[1]	34h	QPI1PORB				B4h
				38h					B8h
		INTP	INTL	3Ch	QPIPQC				BCh
QPIRTCTRL				40h	QPIPLKMC				C0h
QPIRTBL				44h	QPIPNCB				C4h
				48h					C8h

Table 21-20. CSR Intel QPI Routing Layer, Protocol (Dev 16, Function 1) (Sheet 2 of 2)

DID	VID	00h	QPIPAPICSAD		80h
QPIPCTRL		4Ch	QPIPLKMS		CCh
		50h	QPIPQBCPU		D0h
QPIPSTS		54h			D4h
QPIPSB		58h	QPIPQBIOH		D8h
		5Ch			DCh
QPIPRTO		60h			E0h
QPIPPOWCTRL		64h			E4h
QPIPINT		68h			E8h
QPIPRWMAD		6Ch			ECh
QPIPMADDATA		70h			F0h
		74h			F4h
		78h			F8h
		7Ch			FCh

Notes:

1. CAPPTR points to the first capability block

21.11.2.1 QPIRTCTRL: Intel QuickPath Interconnect Routing Table Control

This register is the control for the routing table.

Register: QPIRTCTRL
Device: 16
Function: 1
Offset: 40h

Bit	Attr	Default	Description
31:1	RV	0	Reserved
0	RWLB	0	**Inbound Routing Method** 0 - Route upstream completions to the same port that received the request. New upstream requests are not routed, snoop responses are dropped and a routing error is logged. 1 - Enable Routing Table. ***Notes:*** No routing error is logged when QPIRTCTRL[0] is set to 0. ***Notes:*** The Inbound Routing method is to be programmed to a '1' in all systems after setting up RT and SAD. Until such time, no coherent traffic is expected in the system

21.11.2.2 QPIRTBL: Intel QuickPath Interconnect Routing Table

This table is used for fixed routing of Intel QuickPath Interconnect packets.

Register: QPIRTBL Device: 16 Function: 1 Offset: 44h			
Bit	**Attr**	**Default**	**Description**
63:0	RWLB	0	**Bit per NodeID from 0-31, each bit defines which port that NodeID should target**. **NodeID mapping**: 0 - NodeID 0 ... 30 - NodeID 30 31 - NodeID 31 bit encoding: 0 - Port 0 1 - Port 1

21.11.2.3 QPIPCTRL: Intel QuickPath Interconnect Protocol Control

Register can only be modified under system quiescence.

Note: In order for the QPIPCTRL.[44] to work for protecting remote peer to peer accesses to the BAR regions, two additional registers need to be programmed. These are the QPIPQBCPU and QPIPQBIOH. These registers should be programmed to reflect all the node IDs of the CPUs and IOHs in the system in order that the logic correctly distinguish a CPU access from a remote peer to peer access.

Register: QPIPCTRL
Device: 16
Function: 1
Offset: 4Ch

Bit	Attr	Default	Description
63:52	RV	0	Reserved
51:48	RWL	0011	**Configuration Retry Timeout:** Applies only to PCI Express/ESI ports. Controls how long a configuration request is reissued (when enabled via the root control register) whenever a CRS response is received. Reissue applies to all configuration requests when CRS software visibility is disabled (via the root control register) and to all configuration requests except on configuration reads to Vendor/Device ID field at offset 0x0, when CRS software visibility is enabled. The timer that is controlled by this field starts when a configuration request is issued the very first time on PCI Express. When this timer expires and following that if either a CRS response is received for the configuration request or a completion time-out occurs on the configuration request, the request is aborted (that is, not reissued anymore) and a UR (/equivalent) response is returned. Note that a configuration request is not immediately aborted when this timer expires. Aborting a configuration request only happens when either a completion timeout condition is reached or when a CRS response is received with the retry timeout expired. 0000: 1.28-1.92 ms 0001: 20-30 ms 0010: 120-180 ms 0011: 5-7.5 s 0100: 80-120 s 0101: 160-240 s 0110: 320-480 s 0111: 640-960 s 1000: 1280-1720 s 1001: 5000-7500 s 1010-1111: Reserved
47	RV	0	Reserved
46	RWL	0	**Invalid DNID check enable** Enables DNID check
45	RWL	0	**Write cache flush** Flushes the write cache
44	RWLB	0	**Enable Peer-to-Peer Protection** P2P memory requests have protection requirement that require checking. This mode should only be cleared in platforms that have disabled P2P memory requests. 0 - Disable P2P Protection 1 - Enable P2P Protection ***Note:*** In order for this bit to work for protecting remote peer to peer accesses to the BAR regions, two additional registers need to be programmed. These are the QPIPQBCPU and QPIPQBIOH. These registers should be programmed to reflect all the node IDs of the CPUs and IOHs in the system to distinguish a CPU access from a remote peer to peer access.
43:40	RWL	0	**Write Cache Isoc Reservation** Entries reserved for High Priority (VCp) Isoc traffic. 0 - 7 are legal values.
39:36	RV	0	Reserved

Register: QPIPCTRL
Device: 16
Function: 1
Offset: 4Ch

Bit	Attr	Default	Description
35	RW	1	**Enable p2p Failed Response** When this bit is set IOH sends failed response whenever switch aborts a P2P transaction or a Dual IOH master receives failed response. When this bit is clear, IOH sends all 1 response with successful completion when switch aborts transaction. This applies during viral as well. 0 - Disabled
34	RWL	0	**No Forwarding** When set to 1, disables PQI-to-QPI forwarding sourced by this Intel QuickPath Interconnect.
33	RW	0	Enable Normal Mode Failed Response When this bit is set IOH sends failed response whenever switch aborts a non P2P transaction. When this bit is clear, IOH sends all 1 response with successful completion when switch aborts transaction. This applies during viral as well. 0 - Disabled 1 - Enabled
32	RW	0	**Enable Failed Response in Viral** When this bit is set IOH sends failed response when the switch aborts a transaction in viral mode. When this bit is not set, IOH sends all 1 response with successful completion. 0 - Disabled 1 - Enabled
31:30	RWL	0	**VC1 Priority** Setting only applies when “NodeID DP profile decode” mode is enabled. When Isoc is enabled this value should is expected to be set as Critical. 00 - Standard 01 - Reserved 10 - High 11 - Critical
29:28	RWL	0	**VCp Priority** Setting only applies when “NodeID DP profile decode” mode is enabled. When Isoc is enabled this value should is expected to be set as High. 00 - Standard 01 - Reserved 10 - High 11 - Critical
27:26	RWL	0	**VC0 Priority** Setting only applies when “NodeID DP profile decode” mode is enabled. Setting VC0 to critical or high may cause deadlocks 00 - Low 01 - Medium 10 - Reserved 11 - Reserved
25	RWL	0	**Inbound Reading Snooping** Enabling this mode causes IOH to send SnpInvItoE on Inbound Reads. This is used to force peer caching agent to update the home agent if the snoop hits in there cache rather then allow a cache-to-cache transfer directly to the IOH. This mode is required for Dual IOH proxy systems. 0 - Standard Snoop 1 - Force SnpInvItoE
24:22	RWL	0	**Default SAD NodeID: [2:0]** Used to specify the default home/target NodeID when the SAD is disabled. Only used in UP profile systems, so only 3-bits of NodeID is needed.

Register: QPIPCTRL
Device: 16
Function: 1
Offset: 4Ch

Bit	Attr	Default	Description
21:20	RWL	0	**NodeID[5:4]** This is the NodeID that is assigned to the IOH. It should only be changed via SMBus prior to QPI initialization.
19	RWL	Strap: QPI/ NodeID3	**NodeID[3]** This is the NodeID that is assigned to the IOH. It should only be changed via SMBus prior to Intel QuickPath Interconnect initialization.
18	RWL	Strap: QPI/ NodeID2	**NodeID[2]** This is the NodeID that is assigned to the IOH. It should only be changed via SMBus prior to Intel QuickPath Interconnect initialization.
17:16	RWL	0	**NodeID[1:0]** This is the NodeID that is assigned to the IOH. It should only be changed via SMBus prior to Intel QuickPath Interconnect initialization.
15	RV	0	Reserved
14:13	RWL	0	**Snooping Mode** Defines how snooping is done from the IOH. 00 - Broadcast Snoops based on Participant List. Home Node Broadcast will use this mode with the Participant List empty, and the Home agent will take care of snooping. 01 - Broadcast Snoop based on Participant List, but remove the Home NodeID from the list based on match of NodeID[5:0] 10 - Broadcast Snoop based on Participant List, but remove the Home NodeID from the list based on match of NodeID[5:2,0]. Used for a processor that can send snoop from home agent to any caching agent on that socket. 11 - Router Broadcast. Send Snoop to Home NodeID only.
12	RWL	0	**Enable Poison by default** During testing only, disables poison bit from being sent on Intel QuickPath Interconnect. Any uncorrectable data error will be treated in the same way as a header error. 0 - Enabled 1 - Disabled
11:10	RWL	00	**Abort Time-out Mode** Control how AbortTO is sent on Intel QuickPath Interconnect. AbortTO response will be sent for outbound CfgRd/Wr when it is pending within the IOH longer then the threshold value. This threshold will deviate by up to +100% of the value specified. 00 - Disable AbortTO 01 - 2^11 core clocks (5 us @ 400 MHz) 10 - 2^17 core clocks (327 us @ 400 MHz) 11 - 2^24 core clocks (41 ms @ 400 MHz)
9	RWL	0	**Disable Viral** Disables viral bit from being sent on Intel® QPI or detected from Intel® QPI. 0 - Enabled 1 - Disabled
8	RWL	0	**Disable Data forwarding before Completion** Default behavior is to forward data immediately to PCI Express when the data phase is received on Intel QuickPath Interconnect. When this bit is set the data will not be forwarded until both data and completion phases have been received. 0 - Enable 1 - Disable

Register: QPIPCTRL Device: 16 Function: 1 Offset: 4Ch			
Bit	**Attr**	**Default**	**Description**
7	RWL	0	**Address Mask: [45:41] - DP Profile decode** Causes Address[45:41] to be decoded as defined in Intel QuickPath Interconnect DP Profile. This causes those bits to never be sent on Intel QuickPath Interconnect, and to be considered reserved when received on Intel QuickPath Interconnect. 0 - Disable 1 - Enable
6	RWL	0	**NodeID DP Profile decode** Causes NodeID to be decoded as defined in Intel QuickPath Interconnect DP Profile. This will also insure that PE[1:0] and PH[1:0] (that replace the NodeID bits from SMP and EMP profiles) are always cleared for sending and recieving. 0 - Disable 1 - Enable
5	RWL	0	**Extended header** Extends addressing beyond 46 bits to 51 bits (only allowed in EMP profile). IOH only supports extending of NodeID to 6-bits with extended headers. When set all headers will use extended format. 0 - Disable 1 - Enable Lock bit is connected to fuse-DISMPPRO
4	RV	0	Reserved
3	RWL	0	**Disable write combining** Causes all writes to send a EWB request as soon as M-state is acquired. See Section 4.8 for details. 0 - Enable Write Combining 1 - Disable Write Combining
2	RWL	0	**RdCur/RdCode mode** On Inbound Coherent Reads selection of RdCur or RdCode is done based on this configuration bit. 0 - RdCur 1 - RdCode
1	RWL	0	**Inbound Coherent Write mode** On Inbound Coherent Writes the request and snoops issued for the RFO phase is selected by this mode. In the “Standard” flow InvItoE/ SnpInvItoE is issued. In the “Invalidating Write” flow InvWbMtoI/ SnpInvWbMtoI is issued. See Section 4.5.6 for details. 0 - Standard flow 1 - Invalidating Write flow
0	RWL	1	**SAD mode** Determines how NodeID is decoded. 0 - Single Target specified by Default NodeID. SAD still used to decode memory holes. 1 - Multiple Targets decoded by the SAD

21.11.2.4 QPIPSTS: Intel QuickPath Interconnect Protocol Status

Note: This register gives status for DRS TX and NDR TX explicitly while gross status for NCB/NCS/SNP TX and HOM TX can be inferred from Bit 2 “ORB Not Empty”. If ORB is empty then the IOH does not have pending NCS/NCB/SNP in TX.

Register: QPIPSTS
Device: 16
Function: 1
Offset: 54h

Bit	Attr	Default	Description
31:5	RV	0	Reserved
4	RO	0	TX DRS Queue NOT empty This indicates that the Protocol TX DRS Queue is not empty. 1 - Pending DRS packets to be transmitted 0 - No DRS packets pending
3	RO	0	TX NDR Queue NOT empty This indicates that the Protocol TX NDR Queue is not empty. 1 - Pending NDR packets to be transmitted 0 - No NDR packets pending
2	RO	0	**ORB non-lock_arb Not empty** This indicates that there are no pending requests in the ORB with the exception of StopReq*/StartReq* messages from the lock arbiter. 1 - Pending ORB requests 0 - ORB Empty (except StopReq*/StartReq*)
1	RO	0	**ORB Empty** This indicates that there are no pending requests in the ORB. 0 - Pending ORB requests 1 - ORB Empty
0	RO	0	**Write Cache Empty** This bit indicates that no E,M state lines exist within the write cache. 0 - Write Cache has current E or M state lines. 1 - Write Cache is empty of E or M state lines.

21.11.2.5 QPIPSB: Intel QuickPath Interconnect Protocol Snoop Broadcast

Used in Broadcast of snoops for coherent traffic to main memory.

Register can only be modified under system quiescence.

Register: QPIPSB
Device: 16
Function: 1
Offset: 58h

Bit	Attr	Default	Description
63:0	RW	0	**Snoop vector** Each set bit in the vector corrresponds to a NodeID. bit - NodeID[5:0] 0 - 000000 1 - 000001 2 - 000010 … 7- 000111 … 63 - 111111

21.11.2.6 QPIPRTO: Intel QuickPath Interconnect Protocol Request Time-Out

The register defines the Intel QPI protocol layer timeout values for each timeout level. The values are proportional to the QPI operational frequency. Register can only be modified under system quiescence.

Register: QPIPRTO
Device: 16
Function: 1
Offset: 60h

Bit	Attr	Default	Description
31:24	RV	0	Reserved
23:20	RW	0	**Time-out class 5** Same definition as "Time-out class 1"
19:16	RW	0	**Time-out class 4** Same definition as "Time-out class 1"
15:12	RW	0	**Time-out class 3** Same definition as "Time-out class 1"
11:8	RV	0	*Reserved*, IOH doesn't support sending requests in Time-out class 2
7:4	RW	0	**Time-out class 1** Controls the timeout value for the request designated to this level. The mode here specifies the timeout counter rate. The actual timeout value will be between 3x and 4x the rate. Mode => Timeout counter rate 0x0 => Timeout disable 0x1 = > 2 ^ 8 0x2 => 2 ^ 10 0x3 => 2 ^ 12 0x4 => 2 ^ 14 0x5 => 2 ^ 16 0x6 => 2 ^ 18 0x7 => 2 ^ 20 0x8 => 2 ^ 22 0x9 => 2 ^ 24 0xA => 2 ^ 26 0xB => 2 ^ 28 0xC => 2 ^ 30 0xD => 2 ^ 32 0xE => 2 ^ 34 0xF => 2 ^ 36 ***Note:*** The 2 ^ x mathematical term is used below defined as "2 to the power of x".
3:0	RV	0	*Reserved*

21.11.2.7 QPIPPOWCTRL: Intel QuickPath Interconnect Protocol Power Control

Register is used to control the PMReq response type. IOH will give only a static response to all PMReq message that can be modified with this register's settings.

Register can only be modified under system quiescence.

Register: QPIPPOWCTRL
Device: 16
Function: 1
Offset: 64h

Bit	Attr	Default	Description
31:20	RV	0	Reserved
19:16	RW	0	State Type Sets the State type in the PMReq response 0000: C 0001: P 0010: S 0011: T others: Reserved
15:0	RW	0040h	State Level Sets the State_Level[15:0] in the CmpD response to a PMReq message. The value is priority encoded (similar to one-hot). Default is a state_level of 7. It is required that at least one bit be set in this field. bit: state level 0: 1 1: 2 . 15: 16

21.11.2.8 QPIPINT: Intel QuickPath Interconnect Protocol Interleave Mask

Controls the system interleave determination used by the source address decoder for memory. This is a system wide parameter for interleave of DRAM. It is used to select from the target list, but exactly how it is used depends on the interleave mode of the SAD entry. Its primary usage model is to interleave between two DRAM home agents within an socket in a MP processor. The function that is expected to be used in the MP processors is parity of PA[19,13,10,6].

Register: QPIQPIPINT
Device: 16
Function: 1
Offset: 68h

Bit	Attr	Default	Description
31:16	RV	0	Reserved
15:0	RW	0	**System Interleave Bit Mask for PA[21:6]** Any bit that is enabled will be included in the even parity calculation on an address being processed by the SAD. This output of this parity calculation may be used in the selection of the Target NodeID.

21.11.2.9 QPIPMADCTRL: Intel QuickPath Interconnect Protocol Memory Address Decoder Control

Controls reads and writes to the Memory Address Decoder. Given the nature of this register software must ensure that only a single producer is modifying this register.

Register: QPIPMADCTRL
Device: 16
Function: 1
Offset: 6Ch

Bit	Attr	Default	Description
31:4	RV	0	Reserved
3:0	RW	0	**MAD offset** **Selects the Memory Address Decoder to access on a read or write to "QPIPMADDATA: Intel QuickPath Interconnect Protocol Memory Address Decode Data"** Valid offsets are 0-15

21.11.2.10 QPIPMADDATA: Intel QuickPath Interconnect Protocol Memory Address Decode Data

Defines Source Address Decode for memory space. There are 16 decoder entries exist but which one is being accessed depends on the setting in "QPIPMADCTRL: Intel QuickPath Interconnect Protocol Memory Address Decoder Control". Both reads and write to this register use the offset defined in that register. This means that software must ensure that only a single producer can be modifying these registers.

Register: QPIPMADDATA
Device: 16
Function: 1
Offset: 70h

Bit	Attr	Default	Description
127:121	RV	0	Reserved
120:96	RW	0	**Limit Address[50:26]** Address is 64 MB aligned.
95:89	RV	0	Reserved
88:64	RW	0	**Base Address[50:26]** Address is 64 MB aligned.
63:16	RWL	0	**Target List** Bits [xx:nn] - Target NodeID[5:0] Bits [63:58] - Target NodeID7 Bits [57:52] - Target NodeID6 Bits [51:46] - Target NodeID5 Bits [45:40] - Target NodeID4 Bits [39:34] - Target NodeID3 Bits [33:28] - Target NodeID2 Bits [27:22] - Target NodeID1 Bits [21:16] - Target NodeID0
15:4	RV	0	Reserved

Register: QPIPMADDATA Device: 16 Function: 1 Offset: 70h			
Bit	**Attr**	**Default**	**Description**
3:1	RWL	0	**Interleave Select** 0x0 - Addr[8:6] 0x1 - Addr[8:7], Sys_Interleave 0x2 - Addr[9:8], Sys_Interleave 0x3 - Addr[8:6] XOR Addr[18:16] 0x4 - (Addr[8:7] XOR Addr[18:17]), Sys_Interleave 0x5 - Addr[8:6]: Similar to 0x0 encoding but the nodeid[1] will be overwritten by the Sys_Interleave bit (as calculated per the CSR setting), i.e. final dnodeid = dnodeid[5:2], Sys_Interleave, dnodeid[0]. 0x6 - Addr[8:6] XOR Addr[18:16]: Similar to 0x3 encoding but the nodeid[1] will be overwritten by the Sys_Interleave bit (as calculated per the CSR setting), i.e. final dnodeid = dnodeid[5:2], Sys_Interleave, dnodeid[0] >0x6 - Reserved
0	RWL	0	**Valid** 0 - Not Valid 1 - Valid

21.11.2.11 QPIPAPICSAD: Intel QuickPath Interconnect Protocol APIC Source Address Decode

Defines SAD address decode function for inbound interrupts that are not broadcast.

Register: QPIPSAPICD Device: 16 Function: 1 Offset: 80h			
Bit	**Attr**	**Default**	**Description**
95:81	RV	0	Reserved
80:72	RWL	0	**Physical Mode Local Cluster ID[8:0]** Cluster ID is used in hierarchical systems to determine if interrupt go to the local cluster or to the remote. APIC ID bits used to determine cluster are the ones immediately above the interleave mode bits. See Physical Mode Interleave for which bits are matched.
71:68	RV	0	Reserved
67:64	RWL	0	**Extended Logical Mode Local Cluster ID[3:0]** Cluster ID is used in hierarchical systems to determine if interrupt go to the local cluster or to the remote. APIC ID bits used to determine cluster are the ones immediately above the interleave mode bits. See Extended Logical Mode Interleave for which bits are matched.
63:16	RWL	0	**Target List** Bits [xx:nn] - Target NodeID[5:0] Bits [63:58] - Target NodeID7 Bits [57:52] - Target NodeID6 Bits [51:46] - Target NodeID5 Bits [45:40] - Target NodeID4 Bits [39:34] - Target NodeID3 Bits [33:28] - Target NodeID2 Bits [27:22] - Target NodeID1 Bits [21:16] - Target NodeID0
15:14	RV	0	Reserved

Register: QPIPSAPICD Device: 16 Function: 1 Offset: 80h			
Bit	**Attr**	**Default**	**Description**
13:8	RWLB	0	**Remote NodeID[5:0]** Used to indicate the Node Controller in hierarchical systems. Works in conjunction with the Cluster ID fields.
7	RV	0	Reserved
6:4	RWLB	0	**Physical Mode Interleave** Mode - Interleave - Local/remote Cluster ID 0x0 - APIC ID[5:3] - APIC ID[14:6] 0x1 - APIC ID[7:5] - 0, APIC ID[15:8] 0x2 - APIC ID[8:6] - 00 & APIC ID[15:9] 0x3 - APIC ID[14:12] - APIC ID[7:0] & APIC ID[15] (Needed for Itanium® processor based platforms) >0x3 - Reserved
3:1	RWLB	0	**Extended Logical Mode Interleave** Mode - Interleave - Local/remote Cluster ID 0x0 - APIC ID[18:16] - APIC ID[22:19] 0x1 - APIC ID[19:17] - APIC ID[23:20] >0x1 - Reserved
0	RWLB	0	**Valid** 0 - Not Valid 1 - Valid

21.11.2.12 QPIPDCASAD: Intel QuickPath Interconnect Protocol DCA Source Address Decode

Sets mode for NodeID generation for the DCA hint. The NodeID is generated based on the PCI Express tag, this register includes the modes for how this NodeID is generated.

Register: QPIPDCASAD Device: 16 Function: 1 Offset: 8Ch			
Bit	**Attr**	**Default**	**Description**
31:8	RV	0	Reserved
7:6	RW	0	**Cache Target Translation Mode** Cache target is a bit in the Intel QuickPath Interconnect PrefetchHint message that indicates which target cache in the CPU should get the DCA data. The tag used is from the PCI Express memory write. 00 - “00” 01 -’0’ & Tag[0] 10 - Tag[1:0] 11 - Reserved
5:4	RW	0	**IDBase[1:0]** Base NodeID bits used in some translation modes

Register: QPIPDCASAD Device: 16 Function: 1 Offset: 8Ch			
Bit	**Attr**	**Default**	**Description**
3:1	RW	0	**NodeID Translation Mode** The Target NodeID[2:0] for the PrefetchHint on Intel QuickPath Interconnect is generated from based on these modes. 000 - Tag[4:1] & IDBase[1:0] 001 - 0 & Tag[4:2] & IDBase[1:0] 010 - 0 & Tag[4:1] & IDBase[0] 011 - 0 & Tag[4:0] 100- 00 & Tag[4:1] 101 - 000 & Tag[4:2] >101 - Reserved
0	RWL	0	**Enable DCA** When disabled PrefetchHint will not be sent on Intel QuickPath Interconnect. The inbound write will just follow the standard flow. 0 - Disable 1 - Enable

21.11.2.13 QPIPVGASAD: QPI Protocol VGA Source Address Decode

Fixed address range (0A0000h-0BFFFFh). Same NodeID used for Legacy I/O requests to the fixed address range (3B0h-3BBh, 3C0h-3DFh).

Register: QPIPVGASAD Device: 16 Function: 1 Offset: 94h			
Bit	**Attr**	**Default**	**Description**
31:14	RV	0	Reserved
13:8	RW	0	**NodeID[5:0]** NodeID of the VGA controller
7:1	RV	0	Reserved
0	RWL	0	**Valid** 0 - Not Valid 1 - Valid

21.11.2.14 QPIPLIOSAD: Intel QuickPath Interconnect Protocol Legacy I/O Source Address Decode

Divided into equal 8 equal 4K or 8K chunks interleaved. This space may contain holes.

Register: QPIPLIOSAD
Device: 16
Function: 1
Offset: 9Ch

Bit	Attr	Default	Description
63:16	RW	0	**Target List** Bits [xx:nn] - Target NodeID[5:0] Bits [63:58] - Target NodeID7 Bits [57:52] - Target NodeID6 Bits [51:46] - Target NodeID5 Bits [45:40] - Target NodeID4 Bits [39:34] - Target NodeID3 Bits [33:28] - Target NodeID2 Bits [27:22] - Target NodeID1 Bits [21:16] - Target NodeID0
15:14	RV	0	Reserved
13:8	RW	0	**Remote NodeID[5:0]** Used if Sub Address match is a miss. Should be used to indicate the NodeID of the Node Controller in a hierarchical system.
7:3	RV	0	Reserved
2	RW	0	**Sub Address Bit 15** Sub-Address matched based on Sub-Address enable
1	RW	0	**Sub Address Enable** When enabled, bit 15 of the legacy I/O space is matched against “Sub Address Bit 15” in this register. If they match then Target list is indexed by Legacy I/O Addr[14:12] to determine NodeID. If no match then Remote NodeID is used. When disabled, Legacy I/O Addr[15:13] indexes the Target List to determine the target NodeID. 0 - disabled 1 - enabled
0	RWL	0	**Valid** 0 - Not Valid 1 - Valid Locked by lock1 bit.

21.11.2.15 QPIPBUSSAD: Intel QPI Protocol Bus# Source Address Decode

Used for decode that is based on the PCI Express Bus Number. This space is interleaved across the possible 256 buses.

Register: QPIPBUSSAD
Device: 16
Function: 1
Offset: A4h

Bit	Attr	Default	Description
63:16	RW	0	**Target List** Bits [16:21] - Target NodeID0 Bits [22:27] - Target NodeID1 Bits [28:33] - Target NodeID2 Bits [34:39] - Target NodeID3 Bits [40:45] - Target NodeID4 Bits [46:51] - Target NodeID5 Bits [52:57] - Target NodeID6 Bits [58:63] - Target NodeID7
15:14	RV	0	Reserved
13:8	RW	0	**Remote NodeID[5:0]** Used if Sub Bus# match is a miss. Should be used to indicate the NodeID of the Node Controller in a hierarchical system.
7:3	RV	0	Reserved
2	RW	0	**Sub Bus# Bits 7** Sub-Address is matched based on Sub-Address Mask
1	RW	0	**Sub Bus# enable** When enabled, bit 7 of the Bus# is matched against “Sub Bus# Bit 7” in this register. If they match then Target list is indexed by Bus#[6:4] to determine NodeID (16 Bus# per TargetID). If no match then Remote NodeID is used. When disabled, Bus#[7:5] indexes the Target List to determine the target NodeID (32 Bus# per TargetID). 0 - disabled 1 - enabled
0	RWL	0	**Valid** 0 - Not Valid 1 - Valid

21.11.2.16 QPIPSUBSAD: Intel QuickPath Interconnect Protocol Subtractive Source Address Decode

Subtractive Decode NodeID. If current IOH is Legacy this should not be used.

Register: QPIPSUBSAD
Device: 16
Function: 1
Offset: ACh

Bit	Attr	Default	Description
31:14	RV	0	Reserved
13:8	RW	0	**Legacy IOH NodeID[5:0]**
7:1	RV	0	Reserved
0	RW	0	**Valid** 0 - Not Valid 1 - Valid

21.11.2.17 QPI[1:0]PORB: QPI[1:0] Protocol Outgoing Request Buffer

The Request outstanding list has a number of configuration requirements for tag allocation. This register is separated for Port 0, 1. Each port can be programmed independently.

Register: QPI[1:0]PORB
Device: 16
Function: 1
Offset: B4h, B0h

Bit	Attr	Default	Description
31:16	RV	0	*Reserved*
15:12	RW	0	Pool Index This value is set per port because indexing may need to be different on each port because of asymmetric configurations and NodeID assignment. The value controls which 2 NodeID bits are used to select the RTID allocation pools (4 pools per port). 0000 - Single Pool No indexing 0001 - 1,0 0010 - 2,1 0011 - 3,1 0100 - 4,1 0101 - 5,1 0110 - 3,2 0111 - 4,2 1000 - 5,2 1001 - 4,3 1010 - 5,3 1011 - 5,4 1100 - 2,0 1101 - 3,0 1110 - 4,0 1111 - 5,0
11:9	RW	0	Max Requests Allocation Pool 3 The Max Request value applies per allocation pool. The pool is associated with a single Intel QuickPath Interconnect port. MaxRequest value may be modified by “Merge Pool” bits above. 000 - 16 TID 001 - 24 TID 010 - 32 TID 011 - *Reserved* 100 - *Reserved* 101 - *Reserved* 110 - *Reserved* 111 - *Reserved*
8:6	RW	0	Max Requests Allocation Pool 2 Bit definition is the same as Max Request Pool 3
5:3	RW	0	Max Requests Allocation Pool 1 Bit definition is the same as Max Request Pool 3
2:0	RW	0	Max Requests Allocation Pool 0 Bit definition is the same as Max Request Pool 3

21.11.2.18 QPIPQC: Intel QuickPath Interconnect Protocol Quiescence Control

Used for initiating Quiescence and De-Quiescence of the system. See Section 4.7, "Lock Arbiter" for more information.

Note: The start of the quiesce operation is signaled by setting of bit 0 of this register, whether or not the stop request needs to be sent to the CPU.

Register: QPIPQC
Device: 16
Function: 1
Offset: BCh

Bit	Attr	Default	Description
31:9	RV	0	Reserved
8	RWL	0	Block PHold When set the Lock Arbiter must block any PHold request received until this bit is cleared. The usage model will be to set this bit prior to quiesce. Then verify the Lock Arbiter is idle. Then follow on to the rest of the quiesce flow. These extra steps are only necessary when PHold is allowed in the platform. 0 - PHold proceeds normally 1 - PHold is blocked Locked by lock1 bit.
7:6	RV	0	Reserved
5:3	RWLB	0	**De-Quiescence** Software modifying these bits must clear them when corresponding phases are complete. xx1 - StartReq1 (IOH only) x1x - StartReq2 (IOH only) 1xx - StartReq2 (CPU only)
2:0	RWLB	0	**Quiescence** Software modifying these bits must clear them when corresponding phases are complete. xx1 - StopReq1 (CPU only) x1x - StopReq1 (IOH only) 1xx - Stop Req2 (IOH only)

21.11.2.19 QPIPLKMC: Intel QuickPath Interconnect Protocol Lock Master Control

Control for Lock Master.

Register modified only under system quiescence.

Register: QPIPLKMC
Device: 16
Function: 1
Offset: C0h

Bit	Attr	Default	Description
31:4	RV	0	Reserved
3:1	RW	0	Delay between SysLock In Core Clocks, which are assumed to be at 400 MHz. This may be used to prevent starvation on frequent Lock usage. 000 - 0x0 001 - 0x200 (1.2 us) 010 - 0x1000 (10 us) 011 - 0x2000 (20 us) 100 - 0x4000 (40 us) 101 - 0x8000 (80 us) 110 - 0x10000 (160 us) 111 - 0x20000 (320 us)
0	RWLB	0	Disable Lock Causes NcMsgS-[ProcLock, ProcSplitLock, Quiesce, Unlock] to return immediate Cmp without going through StartReq*/StopReq* sequence.

21.11.2.20 QPIPNCB: Intel QuickPath Interconnect Protocol Non-coherent Broadcast

List should contain all valid CPU caching agents. This broadcast list is used for some interrupts, Inbound VLW, and Power Management broadcasts on Intel QuickPath Interconnect.

Register: QPIPNCB
Device: 16
Function: 1
Offset: C4h

Bit	Attr	Default	Description
63:0	RW	0	**Participant List** Each set bit in the vector corrresponds to a NodeID. bit - NodeID[5:0] 0 - 000000 1 - 000001 2 - 000010 ... 7- 000111 ... 63 - 111111

21.11.2.21 QPIPLKMS: Intel QuickPath Interconnect Protocol Lock Master Status

This register contains status of the lock arbiter.

Register: QPIPLKMS
Device: 16
Function: 1
Offset: CCh

Bit	Attr	Default	Description
31:5	RV	0	Reserved
4:0	RO	0	LOCK_ARB_STATE[4:0]: Lock Arbiter Current State Read only value that shows the current state of the lock arbiter. **IDLE** 5'b00000 (Lock master, the legacy IOH, is idle and ready to launch a lock process) **SEND_STOP_REQ1_CPU** 5'b00001 (Lock master broadcasts StopReq1 message to all CPUs) **SENT_STOP_REQ1_CPU** 5'b00010 **CMPL_STOP_REQ1_CPU** 5'b00011 **CMPL_STOP_REQ1_CPU1** 5'b00100 (Received completions from all CPUs) **SEND_IOH_STOP_REQ1**5'b00101 (Lock master broadcasts StopReq1 message to all IOHs) **STOP_REQ1_IOH** 5'b00110 (Received completions from all non-legacy IOHs) **WAIT_MYIOH_STOP_REQ1** 5'b00111 (MYIOH is the lock master, the legacy IOH) **STOPPED_REQ1_IOH** 5'b01000 (Received completions from all IOHs) **SEND_STOP_REQ2** 5'b01001 (Lock master broadcasts StopReq2 message to all IOHs and optionally to all CPUs) **SEND_STOP_REQ2_2** 5'b01010 **MYIOH_STOP_REQ2** 5'b01011 **MYIOH_QUSC_P** 5'b01100 **MYIOH_QUSC_ALL** 5'b01101 **MYIOH_PRE_QUSC_QPI** 5'b01110 **MYIOH_QUSC_QPI** 5'b01111 **STOPREQ2_SENDCMP** 5'b10000 (Received completions from all IOHs and all CPUs if sent) **STOPPED_REQ2** 5'b10001 (Lock has now been established) **START_REQ1** 5'b10010 (Lock master launches the unlock process once previous lock cycles are done) **SEND_UNLOCK_PCIE** 5'b10011 (Unlock the lock target at the endpoint) **SEND_STARTREQ1_IOH** 5'b10100 (Lock master broadcasts StartReq1 to all IOHs) **SENT_STARTREQ1_IOH** 5'b10101 (After receiving all IOH completions, go to the state immediately below) **SEND_STARTREQ1_CPU** 5'b10110 (Lock master broadcasts StartReq1 to all CPUs) **SENT_STARTREQ1_CPU** 5'b10111 (After receiving all CPU completions, go to the state immediately below) **STARTREQ1_DONE** 5'b11000 **START_REQ2_SEND_IOH** 5'b11001 (Lock master broadcasts StartReq2 to all IOHs) **START_REQ2_SENT_IOH** 5'b11010 **START_REQ2_CMPL_IOH** 5'b11011 (Received all IOH completions) **START_REQ2_SEND_CPU** 5'b11100 (Lock master broadcasts StartReq2 to all CPUs) **START_REQ2_SENT_CPU** 5'b11101 **SEND_UNLOCK_CMP_DONE** 5'b11110 (Received all CPU completions) **COMPLETE** 5'b11111. (Unlock has been done, going back to idle above)

21.11.2.22 QPIPQBCPU: Intel QuickPath Interconnect Protocol Quiesce Broadcast CPU

Controls what processors receive StopReq*/StartReq* messages from the lock arbiter.

Register: QPIPQBCPU
Device: 16
Function: 1
Offset: D0h

Bit	Attr	Default	Description
63:0	RWLB	0	**Participant List** Each set bit in the vector corrresponds to a NodeID. bit - NodeID[5:0] 0 - 000000 1 - 000001 2 - 000010 ... 7- 000111 ... 63 - 111111

21.11.2.23 QPIPQBIOH: Intel QuickPath Interconnect Protocol Quiesce Broadcast CPU

Controls which IOH's receive StopReq*/StartReq* messages from the lock arbiter. Register can only be modified under system quiescence. In a multi-IOH configuration, the QPIPQBIOH register is also used to determine if an outbound access received by the Intel QPI protocol layer originated in a CPU or a remote IOH. This determination is to support dropping of remote-p2p accesses in the system if necessary. This register must be programmed to indicate node IDs of all IOHs populated in the system.

Register: QPIPQBIOH
Device: 16
Function: 1
Offset: D8h

Bit	Attr	Default	Description
63:0	RWLB	0	**Snoop vector** Each set bit in the vector corrresponds to a NodeID. bit - NodeID[5:0] 0 - 000000 1 - 000001 2 - 000010 ... 7- 000111 ... 63 - 111111 ***Note:*** In a multi-IOH configuration, the QPIPQBIOH register is also used to determine whether a particular outbound access received by the Intel QuickPath Interconnect protocol layer originated in a CPU or a remote IOH. This register must therefore be programmed to indicate node IDs of all IOHs populated in the system

21.11.2.24 QPIPSMIC: Intel® QuickPath Interconnect Protocol SMI Control

Register: QPIPSMIC
Device: 17
Function: 1
Offset: A0h

Bit	Attr	Default	Description
63:32	RW	FFFFFFFFh	Destination ID his field specifies the 32-bit Interrupt address. Set to all Fs to indicate broadcast by default.
31:24	RV	0	*Reserved*
23:16	RW	0	Interrupt Data Vector Software programs this to indicate the system vector number that is assigned to this interrupt.
15:8	RV	0	*Reserved*
7:5	RO	2h	Delivery Mode This field is fixed at 02h to indicate SMI
4	RO	0	Trigger Mode 0 - Edge Triggered only is supported by IOH.
3	RO	0	Address Redirection Hint 0: directed only supported
2	RO	0	Address Destination Mode 0: physical. Only physical mode supported.
1:0	RV	0	Reserved

21.11.2.25 QPIPNMIC: Intel® QuickPath Interconnect Protocol NMI Control

Register: QPIPNMIC
Device: 17
Function: 1
Offset: B0h

Bit	Attr	Default	Description
63:32	RW	FFFFFFFFh	Destination ID This field specifies the 32-bit Interrupt address i.e. physical APICID. Set to all Fs by default, to indicate broadcast.
31:24	RV	0	*Reserved*
23:16	RO	0	Interrupt Data Vector This field is irrelevant for NMI
15:8	RV	0	*Reserved*
7:5	RO	4h	Delivery Mode This field is fixed at 04h to indicate NMI
4	RO	0	Trigger Mode 0 - Edge Triggered only is supported by IOH.
3	RO	0	Address Redirection Hint 0: directed only supported
2	RO	0	Address Destination Mode 0: physical. Only physical mode supported.
1:0	RV	0	Reserved

21.11.2.26 QPIPMCAC: Intel QuickPath Interconnect Protocol MCA Control

Register: QPIPMCAC
Device: 17
Function: 1
Offset: C0h

Bit	Attr	Default	Description
63:32	RW	FFFFFFFFh	Destination ID This field specifies the 32-bit Interrupt address. Defaults to broadcast ID.
31:24	RV	0	Reserved
23:16	RW	FFh	Interrupt Data Vector Software programs this to indicate the system vector number that is assigned to this interrupt.
15:8	RV	0	Reserved
7:5	RO	2h	Delivery Mode This field is fixed at 02h to indicate SMI/PMI/MCA.
4	RO	0	Trigger Mode 0 - Edge Triggered only is supported by IOH.
3	RO	0	Address Redirection Hint 0: directed only supported
2	RO	0	Address Destination Mode 0: physical. Only physical mode supported.
1:0	RV	0	Reserved

21.11.2.27 QPIPINITC: Intel® QuickPath Interconnect Protocol INIT Control

Register: QPIPINITC
Device: 17
Function: 1
Offset: D0h

Bit	Attr	Default	Description
63:32	RW	FFFFFFFFh	Destination ID This field specifies the 32-bit Interrupt address. Defaults to broadcast ID.
31:24	RV	0	Reserved
23:16	RO	0	Interrupt Data Vector N/A for INIT
15:8	RV	0	Reserved
7:5	RO	5h	Delivery Mode This field is fixed at 05h to indicate INIT.
4	RO	0	Trigger Mode 0 - Edge Triggered only is supported by IOH.
3	RO	0	Address Redirection Hint 0: directed only supported
2	RO	0	Address Destination Mode 0: physical. Only physical mode supported.
1:0	RV	0	Reserved

21.11.2.28 QPIPINTRC: Intel QuickPath Interconnect Protocol Interrupt Control

Register: QPIPINTRC
Device: 17
Function: 1
Offset: E0h

Bit	Attr	Default	Description
63:48	RV	0	Reserved
47:40	RW	41h	**Legacy Signal Edge/Level:** When set, the corresponding legacy wire from ICH is considered as a edge sensitive signal by IOH. When clear, the corresponding legacy wire from ICH is considered as a level sensitive signal by IOH. 40: NMI 41: INIT 42: SMI 43: INTR 44: A20M 45-47: Reserved
39:32	RW	16h	**Legacy Signal Invert:** When set, the corresponding legacy wire from ICH is inverted by IOH. 32: NMI 33: INIT 34: SMI 35: INTR 36: A20M 37: FERR 38-39: Reserved
31:26	RV	0	Reserved
25	RW	0	**Disable PCI INTx Routing to ICH:** When this bit is set, *local* INTx messages received from the CB DMA/PCI Express ports of the IOH are not routed to legacy ICH - they are either converted into MSI via the integrated I/OxAPIC (if the I/OxAPIC mask bit is clear in the appropriate entries) or cause no further action (when mask bit is set). When this bit is clear, *local* INTx messages received from the CB DMA/PCI Express ports of the IOH are routed to legacy ICH, provided the corresponding mask bit in the IOAPIC is set.
24	RW	0	Route NMI input to MCA: When set, the NMI input into IOH will be routed to MCA message (IntPhysical(MCA)) on Intel QuickPath Interconnect instead of NMI message on Intel QuickPath Interconnect. When clear, the NMI input routes to NMI message on Intel QuickPath Interconnect, either via VLW or IntPhysical(NMI) message, as selected by bits 23:16 of this register.
23:16	RW	0	**Intel QPI Message Select for NMI/SMI/INIT:** When set, the corresponding pin input (provided the message is also unmasked) from ICH or the IOH internally generated message (on error conditions IOH detects or for other RAS events) will be routed to IntPhysical(*) message on Intel QuickPath Interconnect, otherwise a VLW message is used instead. When IntPhysical message is selected on Intel QuickPath Interconnect, then the address and data for the IntPhysical message is obtained via the registers. Note that if the NMI pin is routed to MCA, then bit 16 only applies to the internally generated NMI from IOH. 16: NMI 17: INIT 18: SMI 19-23: Reserved Note that INTR/A20M pins are only routable to VLW message on Intel QuickPath Interconnect whenever they are unmasked with bits 15:8 below.

Register: QPIPINTRC Device: 17 Function: 1 Offset: E0h			
Bit	**Attr**	**Default**	**Description**
15:8	RW	3Fh	**Legacy Signal Mask:** When set, the corresponding legacy wire from ICH is ignored by IOH and for FERR output, IOH does not assert FERR signal to ICH when masked. 8: NMI 9: INIT 10: SMI 11: INTR 12: A20M 13: FERR 15-14: Reserved
7	RW	0	IA-32 or Itanium Processor Family This bit indicates if IOH is in an Intel Xeon processor 7500 series based system or Intel Itanium processor 9300 series based system. This is needed by a) the IOH interrupt redirection logic to know how to interpret an interrupt with APICID set to 0xFF, that is, to broadcast that interrupt or direct to a single processor b) treat logical mode interrupts as illegal in the Itanium Processor Family (IPF) mode 0=IA32 1=IPF
6	RW	0	Physical Mode Interrupt & Extended Logical Interrupt Route/Broadcast Should be set to Route mode when firmware is able to set up a map of APIC ID to NodeID in the Intel QuickPath Interconnect SAD (Source Address Decoder). 0 - Route physical/extended-logical mode interrupts to a single target. If redirection is performed by IOH, the RH (Redirection Hint) bit will be cleared. If redirection is not performed by IOH, the RH bit is preserved. 1 - Broadcast physical/extended-logical mode interrupts using interrupt broadcast list. In this setting, RH bit is cleared for all physical mode interrupts (legacy or extended). But the RH is still preserved (from the original interrupt or from the interrupt table) for extended logical mode interrupts. ***Note:*** This field is expected to be programmed to 0 (default) by BIOS for most platforms. For custom configurations where broadcast of physical and extended-logical-mode interrupts are required, the BIOS should also set bit [5] of this register to force round-robin redirection.
5	RW	0	Select Round robin redirection for logical mode When set, this bit selects a simple round-robin redirection for logical flat and non-broadcast cluster mode interrupts in IA32. When clear, vector number based redirection is selected. Note that cluster mode redirected broadcast interrupts are illegal.
4:3	RW	0	Vector based interrupt redirection control 00 select bits 6:4/5:4 for vector cluster/flat algorithm 01 select bits 5:3/4:3 10 select bits 3:1/2:1 11 select bits 2:0/1:0
2	RW	0	Disable extended cluster mode interrupt redirection: 1: IOH does not perform any redirection of extended cluster mode interrupts. These interrupts are simply forwarded (either routed or broadcast based on bit 6 in this register) as-is to the cpu for redirection in the uncore 0: IOH performs redirection of extended cluster mode interrupts as explained in the interrupt chapter. These interrupts are then forwarded (either routed or broadcast based on bit 6 in this register) to the cpu with only the selected cpu thread indicated in the interrupt mask field of the interrupt packet on Intel QuickPath Interconnect.

Register: QPIPINTRC Device: 17 Function: 1 Offset: E0h			
Bit	**Attr**	**Default**	**Description**
1	RW	0	IA-32 Logical Flat or Cluster Mode Set by bios to indicate if the OS is running logical flat or logical cluster mode. This bit can also be updated by IntPrioUpd messages. 0=flat, 1=cluster.
0	RW	0	Cluster Check Sampling Mode 0: Disable checking for Logical_APICID[31:0] being non-zero when sampling flat/cluster mode bit in the IntPrioUpd message as part of setting bit 1 in this register 1: Enable the above checking See Interrupt chapter for more details

21.11.2.29 QPIPINTRS: Intel QuickPath Interconnect Protocol Interrupt Status

This register is to be polled by bios to determine if internal pending system interrupts are drained out of IOH. General usage model is for software to quiesce the source (for example, IOH global error logic) of a system event like SMI, then poll this register till this register indicates that the event is not pending inside IOH. One additional read is required from software, after the register first reads 0 for the associated event.

Register: QPIPINTRS Device: 17 Function: 1 Offset: E8h			
Bit	**Attr**	**Default**	**Description**
31:8	RV	0	Reserved
7	RO	0	MCA RAS event pending
6	RO	0	NMI RAS event pending
5	RO	0	SMI RAS event pending
4	RO	0	INTR# event (either VLW or IntPhysical) pending
3	RO	0	A20M# pin event pending
2	RO	0	INIT# pin event (either VLW or IntPhysical) pending
1	RO	0	NMI pin event (either VLW or IntPhysical) pending
0	RO	0	SMI# pin event (either VLW or IntPhysical) pending

21.11.3 Intel QuickPath Interconnect Physical Layer Registers

The Physical layer has an internal reset, hard and soft, that result in special register requirements unique to the physical layer. There are two attributes, 'P' and 'PP', which indicate the register is affect by a physical layer reset. 'P' indicates the register is reset on a hard physical layer reset. 'PP' indicates the register is reset on any physical layer reset (hard or soft).

The following state encoding are used in Table 21-11 are used in a number of register encoding below.

Table 21-21. QPIPH-Intel QuickPath Interconnect Tracking State Table

Bits	State Name
0 0000	Reset.Soft & Reset.Default
0 0001	Reset.Calibrate
0 0010	Detect.ClkTerm
0 0011	Detect.FwdClk
0 0100	Detect.DCPattern
0 0101	Polling.BitLock
0 0110	Polling.LaneDeskew
0 0111	Polling.Param
0 1000	Config.LinkWidth
0 1001	Config.FlitLock
0 1010	Reserved
0 1100	Reserved
0 1101	Reserved
0 1110	L0R (Periodic Retraining in process)
0 1111	L0
1 0010	Loopback.Marker Master
1 0011	Loopback.Marker Slave
1 0000	Loopback.Pattern Master
1 0001	Loopback.Pattern Slave
1 1111	Compliance
Others	Reserved.

21.11.3.1 QPI[1:0]PH_CPR: Intel QuickPath Interconnect Physical Layer Capability Register

Register: QPI[1:0]PH_CPR
Device: 13
Function: 1-0
Offset: 828h

Bit	Attr	Default	Description
31:29	RV	0	*Reserved*
28:24	RO	10h	NumTxLanes: Number of Lanes Intel QuickPath Interconnect lanes supported in full width mode. 1XXXX: 20 lanes X1XXX: 19 lanes XX1XX: 18 lanes XXX1X: 17 lanes XXXX1: 16 lanes
23	RO	1	BitlockRetrainPatt: Bit-lock and Retrain with pattern If Set, the implementation supports using a specified patter in bit-lock/ retraining.
22	RO	0	DatScrambleLFSR: Data Scramble with LFSR Intel QPI Link Behavior If set, implementation capable of data scrambling/descrambling with LFSR
21:20	RO	0	RASCap: RAS capability 00: Intel QuickPath Interconnect clock failover not supported
19:18	RV	0	*Reserved*
17:16	RO	1	DeterminismSupport: 1X: Master mode capability X1: Slave mode capability
15	RV	0	*Reserved*
14:12	RO	1h	PwrMgmtCap: Power management Capability **Note: Intel QPI Specific Field** Bit 12: L0s entry capable. Bit 13: LWM capable. Bit 14: L1 entry capable.
11	RV	0	*Reserved*
10:8	RO	7h	LinkWidthCap: Link Width Capability XX1: Full Width X1X: Half Width 1XX: Quarter Width
7:5	RO	0	DebugCap: Debug Capability 1XX: Not capable of extracting slave electrical parameter from TS.Loopback and apply during test X1X: Not capable of running in compliance slave mode as well as transitioning to Loopback.pattern from Compliance state XX1: Not capable of doing Loopback.Stall
4	RO	0	RetrainDurationGranularity: Retraining duration granularity 0: No support for retraining on a 16UI granularity 1: Support for retraining on a 16UI granularity
3:0	RO	0	PhyVersion: Intel QPI physical layer version 0: Rev0 all other encoding are reserved.

21.11.3.2 QPI[1:0]PH_CTR: Intel QuickPath Interconnect Physical Layer Control Register

Register: QPI[1:0]PH_CTR
Device: 13
Function: 1-0
Offset: 82Ch

Bit	Attr	Default	Description
31:24	RV	0	Reserved
23	RWS	0	EnableBitlockRetrainwithPatt: Enable Bit-Lock and retraining with **pattern** 0: Use clock pattern for bitlock/retraining 1: Use pattern in bitlock/retraining
22	RWS	0	EnableScrambleLFSR: Enable Scrambling with LFSR Intel QPI Behavior 0: Data not scrambled/descrambled 1: Data scrambled/descrambled with LFSR
21:14	RV	0	Reserved
13	RWS	0	DisableAutocompliance: Disable Auto-Compliance 0: Path from Detect.Clkterm to compliance is allowed. 1: Path from Detect.Clkterm to compliance is disabled.
12:8	RV	0	Reserved
7	RWDPP	0	LinkSpeed: Full Speed Initialization 0: Slow speed initialization. 1: Force direct operational speed initialization.
6	RV	0	Reserved
5	RWS	Strap: NOT(BMCInit)	PhyInitBegin - Strap dependence: If BMCinit = 0 then default = 1 If BMCinit = 1 then default = 0
4	RWDS	0	Single Step Mode - Intel QPI Link Behavior 0: Link behaves as defined by initialization mode. 1: Physical layer is in single step mode.
3:2	RV	0	Reserved
1	RWS	0	**ResetModifier:** Modifies the behavior of *Physical Layer Reset.* *Reset Modifier* = 0 - Upon setting *Physical Layer Reset* to 1 the state machine will transition to Reset.Soft. *Reset Modifier* = 1 - Upon setting *Physical Layer Reset* to 1 the state machine transition to Reset.Default.
0	RW1S	0	PhyLayerReset: Physical Layer Reset (re-initialization) Used to Reset the Physical Layer, and is *Link Type* dependent in it usage and definition. Setting *Physical Layer Reset* to 1 initiates an inband Reset by transitioning to either Reset.Soft or Reset.Default depending on the value of *Reset Modifier.* If Reset Modifier = 0 the setting *Physical Layer Rest* to 1 will cause a transition to Reset.Soft. If Reset Modifier = 1 the setting *Physical Layer Rest* to 1 will cause a transition to Reset.Default. *Physical Layer Reset* will be cleared to 0 in Reset.Calibrate state.

21.11.3.3 QPI[1:0]PH_TDS: Intel QPI Tx Data Lane Ready Status Register

Register: QPI[1:0]PH_TDS
Device: 13
Function: 1-0
Offset: 834h

Bit	Attr	Default	Description
31	ROPP	1	TxFwdClkDetectSta: Tx forwarded clock lane detection status Intel QPI Behavior A bit value of 0 indicates forwarded clock lane is dropped
30:20	RV	0	*Reserved*
19:0	ROPP	FFFFFh	TxLaneDetectStat: Tx Lane Status Mask A bit value of 0 indicates the TX lane is dropped. Bit 0: Status of lane 0. Bit 1: Status of lane 1. .. and so on. 1:1 correspondence to data lanes on Intel QPI. 1 - Indicates corresponding Tx lane is successfully initialized 0 - Indicates corresponding Tx lane is not initialized. Dual Data & Clock lanes are disabled only in Data mode of operation.

21.11.3.4 QPI[1:0]PH_RDS: Intel QPI Rx Data Lane Ready Status Register

Register: QPI[1:0]PH_RDS
Device: 13
Function: 1-0
Offset: 838h

Bit	Attr	Default	Description
31:20	RV	0	*Reserved*
19:0	ROPP	FFFFFh	RxDataReadyStat: Rx Status Lane Mask QPI Behavior A bit value of 0 indicates Rx lane is dropped. Bit 0: Status of Lane 0 Bit 1: Status of Lane 1. .. and so on.

21.11.3.5 QPI[1:0]PH_PIS: Intel QuickPath Interconnect Physical Layer Initialization Status

Register: QPI[1:0]PH_PIS
Device: 13
Function: 1-0
Offset: 840h

Bit	Attr	Default	Description
31:28	RV	0	*Reserved*
27	RW1C P	0	StateMachineHold: State Machine Hold Intel QPI Link Behavior *State Machine Hold* is only used when *Single Step Mode* is set to 1. When *State Machine Hold* is set to 1 this indicates that Physical layer state machine is holding at the end of a particular initialization state (indicated by *RX State Tracker*). *Initialization Mode* is also important to poll when *State Machine Tracker* is set because if Initialization Mode may indicate and Initialization Failure has occurred. Clearing the *State Machine Hold* bit once it is set to 1 will cause state machine to advance to whatever next state would normally occur.
26	RO	0	InitializeSpeed: Init Speed Note: Intel QPI Specific Field 0: Slow Speed Initialization. 1: Operational Speed Initialization.
25:21	RV	0	Reserved
20:16	RO	0	RxStateTracker: Rx State Tracker Intel QuickPath Interconnect Behavior Indicates the current state of local Rx. State tracker encoding is given in Table 21-22.
15:13	RV	0	*Reserved*
12:8	RO	0	TxStateTracker: Tx State Tracker Intel QuickPath Interconnect Behavior Indicates the current state of local Tx. State tracker encoding is given in Table 21-22
7:1	RV	0	*Reserved*
0	RW1CP	0	LinkupIdentifier: Linkup Identifier Intel QuickPath Interconnect Behavior Set to 0 during Reset.Default Set to 1 when initialization completes and link enters L0. ***Note:*** The attribute is ROS when retraining is enabled.

Table 21-22. QPIPH-Intel QuickPath Interconnect Tracking State Table (Sheet 1 of 2)

Bits	State Name
0 0000	Reset.Soft & Reset.Default
0 0001	Reset.Calibrate
0 0010	Detect.ClkTerm
0 0011	Detect.FwdClk
0 0100	Detect.DCPattern
0 0101	Polling.BitLock
0 0110	Polling.LaneDeskew
0 0111	Polling.Param

Table 21-22. QPIPH-Intel QuickPath Interconnect Tracking State Table (Sheet 2 of 2)

Bits	State Name
0 1000	Config.LinkWidth
0 1001	Config.FlitLock
0 1010	Reserved
0 1100	Reserved
0 1101	Reserved
0 1110	L0R (Periodic Retraining in process)
0 1111	L0
1 0010	Loopback.Marker Master
1 0011	Loopback.Marker Slave
1 0000	Loopback.Pattern Master
1 0001	Loopback.Pattern Slave
1 1111	Compliance
Others	Reserved.

21.11.3.6 QPI[1:0]PH_PTV: Intel QuickPath Interconnect Physical Primary Time-Out Value

Register: QPI[1:0]PH_PTV
Device: 13
Function: 1-0
Offset: 854h

Bit	Attr	Default	Description
31:20	RV	0	Reserved
19:16	RWDS	1h	ETPollingBitlock: Exponential Time Polling Bit Lock Intel QPI Behavior Exponential count for $T_{POLLING.BitLock}$ Time-out value is 2^(value) * 128 TSL (Training Sequence Length)
15:12	RV	0	Reserved
11:8	RWDS	1h	ETInbandRstInit: Exponential Time Inband Reset until Initialization Time-out value is 2^(value) * 128 TSL (Training Sequence Length)
7:4	RV	0	Reserved
3:0	RV	2h	Reserved

21.11.3.7 QPI[1:0]PH_PRT: Intel QuickPath Interconnect Physical Periodic Retraining

Register: QPI[1:0]PH_PRT
Device: 13
Function: 1-0
Offset: 864h

Bit	Attr	Default	Description
31:23	RV	0	Reserved
22	RWDP	0	DurationGranularity: Duration Granularity 0: Indicates agent is using 64 UI granularity 1: Indicates agent is using 16 UI granularity
21:14	RWDP	0	RetrainPacketCnt: Retraining Packet Count retraining packet count; used for retraining duration calculation
13:10	RWDP	0	ExpCntRetrainInterval: Exponential Retraining Interval Exponential count for Retraining Interval. Interval value is multiplied by 2^(count in this field). Although these values are specified in exponential form, counting still needs to be accurate to single UI.
9:8	RV	0	Reserved
7:0	RWDP	0	RetrainInterval: Periodic Retraining Interval Periodic Retraining Interval. A value of 0 indicates periodic retraining is disabled. Value to be programmed by firmware. Each count represents 1024 UI (16 TSL)

21.11.3.8 QPI[1:0]EP_SR: Electrical Parameter Select Register

Register: QPI[1:0]EP_SR
Device: 13
Function: 1-0
Offset: 8A0h

Bits	Attr	Default	Description
31:24	RV	0	Reserved
23:16	RWS	0	EParamSel: Electrical parameter select [7:0] This selects the particular Electrical Parameter to be interfaced. 5h: TEQ (TX Equalization)
15:0	RV	0	Reserved

21.11.3.9 QPI[1:0]MCTR: Electrical Parameter Miscellaneous Control Register

This register is defined for use by Electrical Parameter ID requiring additional control bits for operation.

Register: QPI[1:0]EP_MCTR
Device: 13
Function: 1-0
Offset: 8B4h

Bits	Attr	Default	Description
31:21	RV	0	MiscEPCtrl: Miscellaneous electrical parameter. The electrical parameter defined in EParamSel is written here
20	RWS	0	TAPDIS: No tap select 0: Tx EQ is enabled 1: TXEQ is disabled
19:16	RWS	2h	EQCPRE1: Equalization pre-cursor 1 upper[3:0]
15:13	RV	0	Reverved
12	RWS	0	SGNPOST2: Sign bit for 2nd post upper
11:8	RWS	0	EQPOST2: Equalization Coefficient 2nd post cursor upper[3:0]
7:5	RV	0	Reserved
4:0	RWS	10h	EQPOST1: Equalization Coefficient 1st post cursor upper[4:0]

21.11.3.10 MAX_FC0:

Register: MAX_FC0
Device: 13
Function: 7
Offset: 3B8h

Bits	Attr	Default	Description
31:28	RV	0	Reserved
27	RWS	0	1: IOH is lock/quiesce master 0: non-legacy IOH or IOH not lock/quiesce master
26:0	RV	0	Reserved

21.12 PCI Express, ESI Configuration Space Registers

This section covers the configuration space registers for PCI Express and ESI. See Section 21.10 for Intel QuickPath Interconnect configuration registers.

The next PCIe sections will cover register definitions for devices 0-10 and this description will be divided into three parts. One part that describes the standard PCI header space from 0x0 to 0x3F. The second part describes the device specific region from 0x40 to 0xFF. The third part describes the PCI Express enhanced configuration region.

Notes on register descriptions below:

- Note that in the following sections, PCI Express has been generically used to indicate either a standard PCI Express port or an ESI port and any exceptions to this are called out where applicable.
- When N/A is used in any of the “Device” number rows that indicates the register does not apply to the indicated devices and the register descriptor in the reminder of the table hence will not apply to those devices. There could be other registers defined at the same offset for these device numbers or the offset could be reserved.

21.12.1 Other Register Notes

Note that in general, all register bits in the standard PCI header space (offset 0-3F) or in any OS-visible capability registers, which control the address decode like MSE, IOSE, VGAEN or otherwise control transaction forwarding must be treated as dynamic bits in the sense that these register bits could be changed by the OS when there is traffic flowing through the IOH. Note that the address register themselves can be treated as static in the sense that they will not be changed without the decode control bits being clear. Registers outside of this standard space will be noted as dynamic when appropriate.

Figure 21-1. PCI Express Root Port (Devices 1-10), ESI Port (Device 0) Type1 Configuration Space

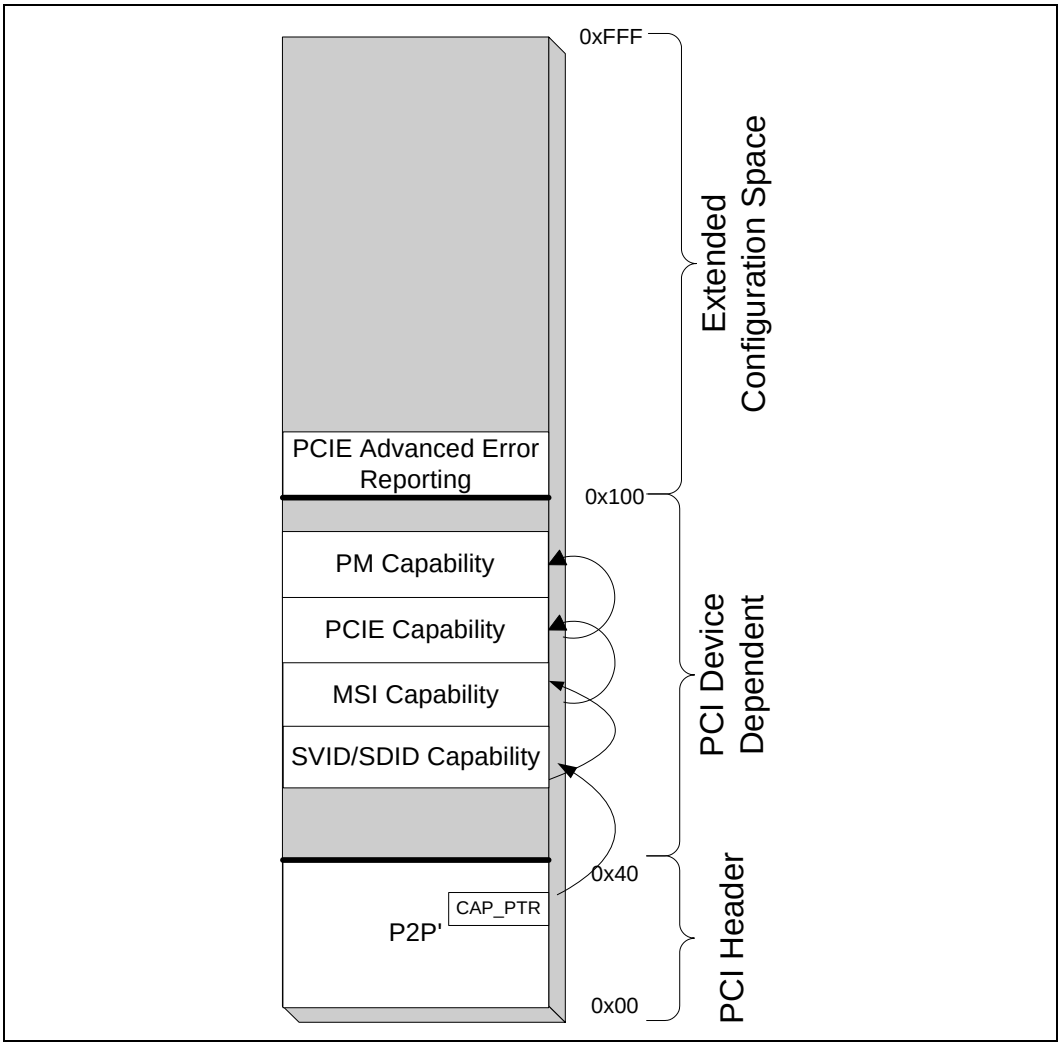

Figure 21-1 illustrates how each PCI Express port's configuration space appears to software. Each PCI Express configuration space has three regions:

- **Standard PCI Header** - This region is the standard PCI-to-PCI bridge header providing legacy OS compatibility and resource management.
- **PCI Device Dependent Region** - This region is also part of standard PCI configuration space and contains the PCI capability structures and other port specific registers. For the IOH, the supported capabilities are:
  - SVID/SDID Capability
  - Message Signalled Interrupts
  - Power Management
  - PCI Express Capability
- **PCI Express Extended Configuration Space** - This space is an enhancement beyond standard PCI and only accessible with PCI Express aware software. The IOH supports the Advanced Error Reporting Capability in this configuration space.

Not all the capabilities listed above for a PCI Express port are required for a ESI port. Through the rest of the chapter, as each register elaborated upon, it will be mentioned which registers are applicable to the PCI Express port and which are applicable to the ESI port.

Table 21-23. IOH Device 0 (ESI mode) Configuration Map

DID		VID		00h					80h
PCISTS		PCICMD		04h					84h
CCR			RID	08h					88h
BIST	HDR	PLAT	CLSR	0Ch					8Ch
				10h	PXPCAP	PXPNXTPTR	PXPCAPID		90h
				14h	DEVCAP				94h
				18h	DEVSTS	DEVCON			98h
				1Ch	LNKCAP				9Ch
				20h	LNKSTS	LNKCON			A0h
				24h	SLTCAP				A4h
				28h	SLTSTS	SLTCON			A8h
SID		SVID		2Ch	ROOTCAP	ROOTCON			ACh
				30h	ROOTSTS				B0h
			CAPPTR	34h	DEVCAP2				B4h
				38h		DEVCON2			B8h
		INTPIN	INTL	3Ch					BCh
				40h	LNKSTS2	LNKCON2			C0h
				44h					C4h
				48h					C8h
				4Ch					CCh
				50h					D0h
				54h					D4h
				58h					D8h
				5Ch					DCh
MSICTL		MSINXTPTR	MSICAPID	60h	PMCAP				E0h
MSGADR				64h	PMCSR				E4h
		MSGDAT		68h					E8h
MSIMSK				6Ch					ECh
MSIPENDING				70h					F0h
				74h					F4h
				78h					F8h
				7Ch					FCh

Table 21-24. IOH Device 0 (ESI mode) Extended Configuration Map

ERRCAPHDR		100h	PERFCTRLSTS				180h
UNCERRSTS		104h					184h
UNCERRMSK		108h	MISCCTRLSTS				188h
UNCERRSEV		10Ch					
COERRSTS		110h			PCIE_IOU_BIF_CTRL[1]		190h
CORERRMSK		114h					
ERRCAP		118h					
HDRLOG		11Ch					
		120h					
		124h					
		128h					
RPERRCMD		12Ch					
RPERRSTS		130h					
ERRSID	CORSRCID	134h					
		138h					
		13Ch					
APICLIMIT	APICBASE	140h					
		144h					
		148h					
		14Ch					
ACSCAPHDR		150h					
ACSCTRL	ACSCAP	154h					
		158h					
		15Ch					1DCh
		160h	CTOCTRL				1E0h
		164h	PCI_LER_SS_CTRLSTS				1E4h
		168h					1E8h
		16Ch					
		170h					
		174h					
		178h					
		17Ch					1FCh

Note: 1: Applicable only to devices #1, 3, 7.

Table 21-25. IOH Devices 0(ESI Mode) Configuration Map

XPCORERRSTS					200h
XPCORERRMSK					204h
XPUNCERRSTS					208h
XPUNCERRMSK					20Ch
XPUNCERRSEV					210h
	XPUNCERRPTR				214h
					218h
					21Ch
					220h
					224h
					228h
					22Ch
XPGLBERRPTR	XPGLBERRSTS				230h
					234h
					238h
					23Ch
					240h
					244h
					248h
					24Ch
					250h
					254h
					258h
					25Ch
					260h
					264h
					268h
					26Ch
					270h
					274h
					278h
					27Ch

Table 21-26. IOH Devices 0(PCIe Mode)-10 Legacy Configuration Map (PCI Express Registers)

DID		VID		00h					80h
PCISTS		PCICMD		04h					84h
CCR			RID	08h					88h
BIST	HDR	PLAT	CLSR	0Ch					8Ch
				10h	PXPCAP	PXPNXTPTR	PXPCAPID		90h
				14h	DEVCAP				94h
	SUBBUS	SECBUS	PBUS	18h	DEVSTS	DEVCON			98h
SSTS		IOLIM	IOBAS	1Ch	LNKCAP				9Ch
MLIM		MBAS		20h	LNKSTS	LNKCON			A0h
PLIM		PBAS		24h	SLTCAP				A4h
PBASU				28h	SLTSTS	SLTCON			A8h
PLIMU				2Ch	ROOTCAP	ROOTCON			ACh
				30h	ROOTSTS				B0h
			CAPPTR	34h	DEVCAP2				B4h
				38h					B8h
BCR		INTPIN	INTL	3Ch					BCh
		SNXTPTR	SCAPID	40h	LNKSTS2	LNKCON2			C0h
SID		SVID		44h					C4h
				48h					C8h
				4Ch					CCh
				50h					D0h
				54h					D4h
				58h					D8h
				5Ch					DCh
MSICTL		MSINXTPTR	MSICAPID	60h	PMCAP				E0h
MSGADR				64h	PMCSR				E4h
		MSGDAT		68h					E8h
				6Ch					ECh
				70h					F0h
				74h					F4h
				78h					F8h
				7Ch					FCh

Table 21-27. IOH Devices 0(PCIe Mode)-10 Extended Configuration Map (PCI Express Registers) Page#0

ERRCAPHDR		100h	PERFCTRLSTS		180h
UNCERRSTS		104h			184h
UNCERRMSK		108h	MISCCTRLSTS		188h
UNCERRSEV		10Ch			18Ch
CORERRSTS		110h			
CORERRMSK		114h			
ERRCAP		118h			
HDRLOG		11Ch			
		120h			
		124h			
		128h			
RPERRCMD		12Ch			
RPERRSTS		130h			
ERRSID	CORSRCID	134h			
SSMSK		138h			
		13Ch			
APICLIMIT	APICBASE	140h	ADDPCIECTRL		1C0h
		144h			
		148h			
		14Ch			
ACSCAPHDR		150h			
ACSCTRL	ACSCAP	154h			
		158h			
		15Ch			
		160h	CTOCTRL		1E0h
		164h	PCIELERCTRL		1E4h
		168h			
		16Ch			
		170h			
		174h			
		178h			
		17Ch			1FCh

Table 21-28. IOH Devices 0-10 Extended Configuration Map (PCI Express Registers) Page#1

XPCORERRSTS		200h
XPCORERRMSK		204h
XPUNCERRSTS		208h
XPUNCERRMSK		20Ch
XPUNCERRSEV		210h
	XPUNCERRPTR	214h
UNCEMASK		218h
COREDMSK		21Ch
PREDMSK		220h
XPUNCEDMASK		224h
XPCOREDMASK		228h
		22Ch
XPGLBERRPTR	XPGLBERRSTS	230h
		234h
		238h
		23Ch
		240h
		244h
		248h
		24Ch
		250h
		254h
		258h
		25Ch
		260h
		264h
		268h
		26Ch
		270h
		274h
		278h
		27Ch

21.12.2 Standard PCI Configuration Space (0x0 to 0x3F) - Type 0/1 Common Configuration Space

This section covers registers in the 0x0 to 0x3F region that are common to all the devices 0 through 11. Comments at the top of the table indicate what devices/functions the description applies to. Exceptions that apply to specific functions are noted in the individual bit descriptions.

21.12.2.1 VID: Vendor Identification Register

Register: VID
Device: 0-10
Function: 0
Offset: 00h

Bit	Attr	Default	Description
15:0	RO	8086h	Vendor Identification Number The value is assigned by PCI-SIG to Intel.

21.12.2.2 DID: Device Identification Register

Register: DID
Device: 0
Function: 0
Offset: 02h

Bit	Attr	Default	Description
15:0	RO (Dev#10), RO (Others)	0x3400-3407	Device Identification Number The value is assigned by Intel to each product. IOH will have a unique device id for each device.

21.12.2.3 DID: Device Identification Register

Register: DID
Device: 1-10
Function: 0
Offset: 02h

Bit	Attr	Default	Description
15:0	RO (Dev#10), RO (Others)	Dev: Def 1: 3408h 2: 3409h 3: 340Ah 4: 340Bh 5: 340Ch 6: 340Dh 7: 340Eh 8: 340Fh 9: 3410h 10: 3411h	Device Identification Number The value is assigned by Intel to each product. IOH will have a unique device ID for each device.

21.12.2.4 PCICMD: PCI Command Register (Dev #0 ESI mode)

This register defines the PCI 3.0 compatible command register values applicable to PCI Express space.

Register: PCICMD
Device: 0 (ESI only)
Function: 0
Offset: 04h

Bit	Attr	Default	Description
15:11	RV	00h	*Reserved.* (by PCI SIG)
10	RO	0	**Not applicable to PCI Express**
9	RO	0	**Fast Back-to-Back Enable** Not applicable to PCI Express and is hardwired to 0
8	RW	0	**SERR Enable** For PCI Express/ESI ports, this field enables notifying the internal core error logic of occurrence of an uncorrectable error (fatal or non-fatal) at the port. The internal core error logic of IOH then decides if/how to escalate the error further (pins/message, and so on). This bit also controls the propagation of PCI Express ERR_FATAL and ERR_NONFATAL messages received from the port to the internal IOH core error logic. 1: Fatal and Non-fatal error generation and Fatal and Non-fatal error message forwarding is enabled 0: Fatal and Non-fatal error generation and Fatal and Non-fatal error message forwarding is disabled Refer to *PCI Express Base Specification, Revision 1.1 and post 1.1 Erratas and EC*'s* for details of how this bit is used in conjunction with other control bits in the Root Control register for forwarding errors detected on the PCI Express interface to the system core error logic. This bit has no impact on error reporting from the other device - I/OxAPIC.
7	RO	0	**IDSEL Stepping/Wait Cycle Control** Not applicable to internal IOH devices. Hardwired to 0.
6	RW	0	**Parity Error Response** For PCI Express/ESI ports, IOH ignores this bit and always does ECC/parity checking and signaling for data/address of transactions both to and from IOH. This bit though affects the setting of bit 8 in the PCISTS (see bit 8 in Section 21.12.2.6) register.
5	RO	0	**VGA palette snoop Enable** Not applicable to internal IOH devices. Hardwired to 0.
4	RO	0	**Memory Write and Invalidate Enable** Not applicable to internal IOH devices. Hardwired to 0.
3	RO	0	**Special Cycle Enable** Not applicable to PCI Express. Hardwired to 0.
2	RW	0	**Bus Master Enable** Controls the ability of the PCI Express/ESI port in generating/forwarding memory (including MSI writes) or I/O transactions (and not messages) or configuration transactions from the secondary side to the primary side. For I/OxAPIC, this bit enables them to generate memory write/MSI. 1: Enables the PCI Express/ESI port or I/OxAPIC to generate/forward memory, config or I/O read/write requests. 0: The Bus Master is disabled. When this bit is 0, IOH root ports will treat upstream PCI Express memory writes/reads, IO writes/reads, and configuration reads and writes as unsupported requests (and follow the rules for handling unsupported requests). This behavior is also true towards transactions that are already pending in the IOH root port's internal queues when the BME bit is turned off. I/OxAPIC cannot generate any memory transactions when this bit is 0.

Register: PCICMD Device: 0 (ESI only) Function: 0 Offset: 04h			
Bit	**Attr**	**Default**	**Description**
1	RW	0	**Memory Space Enable** 1: Enables a PCI Express/ESI port's memory range registers and internal I/OxAPIC's MBAR register (ABAR range decode is not enabled by this bit) to be decoded as valid target addresses for transactions from primary side. 0: Disables a PCI Express/ESI port's memory range registers (including the CSR range registers) to be decoded as valid target addresses for transactions from primary side Note that if a PCI Express/ESI port's MSE bit is clear, that port can still be target of any memory transaction if subtractive decoding is enabled on that port.
0	RW	0	**IO Space Enable** Applies only to PCI Express/ESI ports 1: Enables the I/O address range, defined in the IOBASE and IOLIM registers of the PCI-to-PCI bridge header, for target decode from primary side 0: Disables the I/O address range, defined in the IOBASE and IOLIM registers of the PCI-to-PCI bridge header, for target decode from primary side. Note that if a PCI Express/ESI port's IOSE bit is clear, that port can still be target of an I/O transaction if subtractive decoding is enabled on that port.

21.12.2.5 PCICMD: PCI Command Register (Dev #0 PCIe mode and Dev #1-10)

This register defines the PCI 3.0 compatible command register values applicable to PCI Express space.

Register: PCICMD Device: 0 (PCIe only) Device: 1-10 Function: 0 Offset: 04h			
Bit	**Attr**	**Default**	**Description**
15:11	RV	00h	*Reserved.* (by PCI SIG)
10	RO	0	**Not applicable to PCI Express**
9	RO	0	**Fast Back-to-Back Enable** Not applicable to PCI Express and is hardwired to 0
8	RW	0	**SERR Enable** For PCI Express/ESI ports, this field enables notifying the internal core error logic of occurrence of an uncorrectable error (fatal or non-fatal) at the port. The internal core error logic of IOH then decides if/how to escalate the error further (pins/message, and so on). This bit also controls the propagation of PCI Express ERR_FATAL and ERR_NONFATAL messages received from the port to the internal IOH core error logic. 1: Fatal and Non-fatal error generation and Fatal and Non-fatal error message forwarding is enabled 0: Fatal and Non-fatal error generation and Fatal and Non-fatal error message forwarding is disabled Refer to *PCI Express Base Specification, Revision 1.1 and post 1.1 Erratas and EC*'s* for details of how this bit is used in conjunction with other control bits in the Root Control register for forwarding errors detected on the PCI Express interface to the system core error logic. This bit has no impact on error reporting from the other device - I/OxAPIC.
7	RO	0	**IDSEL Stepping/Wait Cycle Control** Not applicable to internal IOH devices. Hardwired to 0.

Register: PCICMD Device: 0 (PCIe only) Device: 1-10 Function: 0 Offset: 04h			
Bit	**Attr**	**Default**	**Description**
6	RW	0	**Parity Error Response** For PCI Express/ESI ports, IOH ignores this bit and always does ECC/parity checking and signaling for data/address of transactions both to and from IOH. This bit though affects the setting of bit 8 in the PCISTS (see bit 8 in Section 21.12.2.6) register.
5	RO	0	**VGA palette snoop Enable** Not applicable to internal IOH devices. Hardwired to 0.
4	RO	0	**Memory Write and Invalidate Enable** Not applicable to internal IOH devices. Hardwired to 0.
3	RO	0	**Special Cycle Enable** Not applicable to PCI Express. Hardwired to 0.
2	RW	0	**Bus Master Enable** Controls the ability of the PCI Express/ESI port in generating/forwarding memory (including MSI writes) or I/O transactions (and not messages) or configuration transactions from the secondary side to the primary side. For I/OxAPIC, this bit enables them to generate memory write/MSI. 1: Enables the PCI Express/ESI port or I/OxAPIC to generate/forward memory, config or I/O read/write requests. 0: The Bus Master is disabled. When this bit is 0, IOH root ports will treat upstream PCI Express memory writes/reads, IO writes/reads, and configuration reads and writes as unsupported requests (and follow the rules for handling unsupported requests). This behavior is also true towards transactions that are already pending in the IOH root port's internal queues when the BME bit is turned off. I/OxAPIC cannot generate any memory transactions when this bit is 0.
1	RW	0	**Memory Space Enable** 1: Enables a PCI Express/ESI port's memory range registers and internal I/OxAPIC's MBAR register (ABAR range decode is not enabled by this bit) to be decoded as valid target addresses for transactions from primary side. 0: Disables a PCI Express/ESI port's memory range registers (including the CSR range registers) to be decoded as valid target addresses for transactions from primary side Note that if a PCI Express/ESI port's MSE bit is clear, that port can still be target of any memory transaction if subtractive decoding is enabled on that port.
0	RW	0	**IO Space Enable** Applies only to PCI Express/ESI ports 1: Enables the I/O address range, defined in the IOBASE and IOLIM registers of the PCI-to-PCI bridge header, for target decode from primary side 0: Disables the I/O address range, defined in the IOBASE and IOLIM registers of the PCI-to-PCI bridge header, for target decode from primary side. Note that if a PCI Express/ESI port's IOSE bit is clear, that port can still be target of an I/O transaction if subtractive decoding is enabled on that port.

21.12.2.6 PCISTS: PCI Status Register

The PCI Status register is a 16-bit status register which reports the occurrence of various events associated with the primary side of the "virtual" PCI-PCI bridge embedded in PCI Express ports and also primary side of the other devices on the internal IOH bus.

Register: PCISTS
Device: 0-10
Function: 0
Offset: 06h

Bit	Attr	Default	Description
15	RW1C	0	Detected Parity Error This bit is set by a device when it receives a packet on the primary side with an uncorrectable data error (that is, a packet with poison bit set or an uncorrectable data ECC error was detected at the XP-DP interface when ECC checking is done) or an uncorrectable address/control parity error. The setting of this bit is regardless of the Parity Error Response bit (PERRE) in the PCICMD register.
14	RW1C (Dev#0-10)	0	**Signaled System Error** 1: The device reported fatal/non-fatal (and not correctable) errors it detected on its PCI Express interface. Software clears this bit by writing a '1' to it. For Express ports this bit is also set (when SERR enable bit is set) when a FATAL/NON-FATAL message is forwarded from the Express link to the ERR[2:0] pins or to ICH via a message. Note that IOH internal 'core' errors (like parity error in the internal queues) are not reported via this bit. 0: The device did not report a fatal/non-fatal error
13	RW1C	0	**Received Master Abort** This bit is set when a device experiences a master abort condition on a transaction it mastered on the primary interface (IOH internal bus). Note that certain errors might be detected right at the PCI Express interface and those transactions might not 'propagate' to the primary interface before the error is detected (for example, accesses to memory above TOCM in cases where the PCIe interface logic itself might have visibility into TOCM). Such errors do not cause this bit to be set, and are reported via the PCI Express interface error bits (secondary status register). Conditions that cause bit 13 to be set, include: • Device receives a completion on the primary interface (internal bus of IOH) with Unsupported Request or master abort completion Status. This includes UR status received on the primary side of a PCI Express port on peer-to-peer completions also. • Device accesses to holes in the main memory address region that are detected by the Intel QuickPath Interconnect source address decoder. • Other master abort conditions detected on the IOH internal bus
12	RW1C	0	**Received Target Abort** This bit is set when a device experiences a completer abort condition on a transaction it mastered on the primary interface (IOH internal bus). Note that certain errors might be detected right at the PCI Express interface and those transactions might not 'propagate' to the primary interface before the error is detected (for example, accesses to memory above VTCSRBASE). Such errors do not cause this bit to be set, and are reported via the PCI Express interface error bits (secondary status register). Conditions that cause bit 12 to be set, include: • Device receives a completion on the primary interface (internal bus of IOH) with completer abort completion Status. This includes CA status received on the primary side of a PCI Express port on peer-to-peer completions also. • Accesses to Intel QuickPath Interconnect that return a failed completion status • Other completer abort conditions detected on the IOH internal bus
11	RW1C	0	**Signaled Target Abort** This bit is set when a device signals a completer abort completion status on the primary side (internal bus of IOH). This condition includes a PCI Express port forwarding a completer abort status received on a completion from the secondary side and passed to the primary side on a peer-to-peer completion. I/OxAPIC sets this bit when it receives config/memory transactions larger than a DWORD or cross a DWORD boundary.
10:9	RO	0h	DEVSEL# Timing Not applicable to PCI Express. Hardwired to 0.

Register: PCISTS Device: 0-10 Function: 0 Offset: 06h			
Bit	**Attr**	**Default**	**Description**
8	RW1C	0	Master Data Parity Error This bit is set by a device if the Parity Error Response bit in the PCI Command register is set and it receives a completion with poisoned data from the primary side or if it forwards a packet with data (including MSI writes) to the primary side with poison.
7	RO	0	Fast Back-to-Back Not applicable to PCI Express. Hardwired to 0.
6	RV	0	*Reserved*
5	RO	0	66MHz capable Not applicable to PCI Express. Hardwired to 0.
4	RO	1h	**Capabilities List** This bit indicates the presence of a capabilities list structure
3:0	RV	0h	*Reserved*

21.12.2.7 RID: Revision Identification Register

This register contains the revision number of the IOH. The revision number steps the same across all devices and functions, that is, individual devices do not step their RID independently. Note that the revision id for the JTAG IDCODE register also steps with this register.

The IOH supports the CRID feature where in this register's value can be changed by BIOS.

Register: RID Device: 0-10 Function: 0 Offset: 08h			
Bit	**Attr**	**Default**	**Description**
7:4	RO	0	**Major Revision** Steppings which require all masks to be regenerated. 0: A stepping 1: B stepping
3:0	RO	0	**Minor Revision** Incremented for each stepping which does not modify all masks. Reset for each major revision. 0: x0 stepping 1: x1 stepping 2: x2 stepping

21.12.2.8 CCR: Class Code Register

This register contains the Class Code for the device.

Register: CCR Device: 0-10 Function: 0 Offset: 09h			
Bit	**Attr**	**Default**	**Description**
23:16	RO	06h	Base Class For PCI Express/ESI ports, this field is hardwired to 06h, indicating it is a "Bridge Device". For I/OxAPIC devices, this field defaults to 08h, indicating it is a "Generic System Peripherals".
15:8	RO	04h	Sub-Class For PCI Express/ESI ports, this field defaults to 04h indicating "PCI-PCI bridge". This register changes to the sub class of 00h to indicate "Host Bridge", when bit 0 in Section 21.6.3, "IOHMISCCTRL: IOH MISC Control Register" on page 336 is set.
7:0	RO	00h	Register-Level Programming Interface This field is hardwired to 00h for PCI Express/ESI ports.

21.12.2.9 CLSR: Cache Line Size Register

Register: CLSR Device: 0-10 Function: 0 Offset: 0Ch			
Bit	**Attr**	**Default**	**Description**
7:0	RW	0	Cache line Size This register is set as RW for compatibility reasons only. Cache line size for IOH is always 64B. IOH hardware ignore this setting.

21.12.2.10 PLAT: Primary Latency Timer

Register: PLAT Device: 0-10 Function: 0 Offset: 0Dh			
Bit	Attr	Default	Description
7:0	RO	0h	Prim_Lat_timer: Primary Latency Timer Not applicable to PCI Express. Hardwired to 00h.

This register denotes the maximum timeslice for a burst transaction in legacy PCI 2.3 on the primary interface. It does not affect/influence PCI Express functionality.

21.12.2.11 HDR: Header Type Register (Dev#0, ESI Mode)

This register identifies the header layout of the configuration space.

Register: HDR Device: 0 Function: 0 Offset: 0Eh ESI mode only			
Bit	**Attr**	**Default**	**Description**
7	RO	0	Multi-function Device This bit defaults to 0 for PCI Express/ESI ports.
6:0	RO	00h	**Configuration Layout** This field identifies the format of the configuration header layout. For Device 0 in ESI mode, default is 00h indicating a conventional type 00h PCI header ESI.

21.12.2.12 HDR: Header Type Register (Dev#0, PCIe Mode and Dev#1-10)

This register identifies the header layout of the configuration space.

Register: HDR Device: 1-10 Function: 0 Offset: 0Eh PCIe mode only			
Bit	**Attr**	**Default**	**Description**
7	RO	0	**Multi-function Device** This bit defaults to 0 for PCI Express/ESI ports.
6:0	RO	01h	**Configuration Layout** This field identifies the format of the configuration header layout. Its Type1 for all PCI Express/ESI ports The default is 01h, indicating a “PCI to PCI Bridge.”

21.12.2.13 BIST: Built-In Self Test

Register: BIST Device: 0-10 Function: 0 Offset: 0Fh			
Bit	**Attr**	**Default**	**Description**
7:0	RO	0h	BIST_TST: BIST Tests Not supported. Hardwired to 00h

This register is used for reporting control and status information of BIST checks within a PCI Express port.

21.12.2.14 SVID: Subsystem Vendor ID (Dev#0, ESI Mode)

This register identifies the manufacturer of the system. This 16-bit register combined with the Device Identification Register uniquely identifies any PCI device.

Register: SVID Device: 0 Function: 0 Offset: 2Ch ESI mode only			
Bit	**Attr**	**Default**	**Description**
15:0	RWO	8086h	**Vendor Identification Number.** The default value specifies Intel.

21.12.2.15 SID: Subsystem Identity (Dev#0, ESI Mode)

This register identifies the system.

Register: SID Device: 0 Function: 0 Offset: 2Eh ESI mode only			
Bit	**Attr**	**Default**	**Description**
15:0	RWO	00h	**Subsystem Identification Number:** Assigned by the subsystem vendor to uniquely identify the subsystem.

21.12.2.16 CAP: Capability Pointer

The CAPPTR is used to point to a linked list of additional capabilities implemented by the device. It provides the offset to the first set of capabilities registers located in the PCI compatible space from 40h.

Register: CAP Device: 0-10 Function: 0 Offset: 34h			
Bit	**Attr**	**Default**	**Description**
7:0	RWO	40h	**Capability Pointer** Points to the first capability structure for the device.

21.12.2.17 INTL: Interrupt Line Register

The Interrupt Line register is used to communicate interrupt line routing information between initialization code and the device driver. This register is not used in newer OSes and is just kept as is.

Register: INTL Device: 0-10 Function: 0 Offset: 3Ch			
Bit	**Attr**	**Default**	**Description**
7:0	RWO	00h	**Interrupt Line** This bit is RO for PCI Express/ESI ports

21.12.2.18 INTPIN: Interrupt Pin Register

The INTPIN register identifies legacy interrupts for INTA, INTB, INTC and INTD as determined by BIOS/firmware. These are emulated over the ESI port using the appropriate Assert_Intx commands.

Register: INTPIN
Device: 0-10
Function: 0
Offset: 3Dh

Bit	Attr	Default	Description
7:0	RWO	01h	**Interrupt Pin** This field defines the type of interrupt to generate for the PCI Express port. 001: Generate INTA 010: Generate INTB 011: Generate INTC 100: Generate INTD Others: Reserved BIOS/configuration Software has the ability to program this register once during boot to set up the correct interrupt for the port. Note: IOH always generates INTA irrespective of INTPIN register configuration.

21.12.2.19 TSWCTL0 : General Control Register

This is a data manager control register.

Register: TSWCTL0
Device: 13
Function: 7
Offset: 30Ch

Bit	Attr	Default	Description
31:11	RV	rsvd	Reserved
10	RW	0	global_nosnoop_disable
9:0	RV	rsvd	Reserved

21.12.3 Standard PCI Configuration Space (0x0 to 0x3F) - Type 1 - Only Common Configuration Space

This section covers registers that are applicable only to PCI express/ESI ports.

21.12.3.1 PBUS: Primary Bus Number Register

This register identifies the bus number on the on the primary side of the PCI Express port.

Register: PBUS Device: 0-10 Function: 0 Offset: 18h			
Bit	**Attr**	**Default**	**Description**
7:0	RW	00h	**Primary Bus Number** Configuration software programs this field with the number of the bus on the primary side of the bridge. This register has to be kept consistent with the IOHBUSNO0/1 register (see Section 21.6.5.12) in the CSRCFG space. BIOS (and OS if internal bus number gets moved) must program this register to the correct value since IOH hardware would depend on this register for inbound decode purposes.

21.12.3.2 SECBUS: Secondary Bus Number

This register identifies the bus number assigned to the secondary side (PCI Express) of the "virtual" PCI-PCI bridge. This number is programmed by the PCI configuration software to allow mapping of configuration cycles to devices connected to PCI Express.

Register: SECBUS Device: 0-10 Function: 0 Offset: 19h			
Bit	**Attr**	**Default**	**Description**
7:0	RW	00h	**Secondary Bus Number** This field is programmed by configuration software to assign a bus number to the secondary bus of the virtual P2P bridge. IOH uses this register to forward a configuration transaction as either a Type 1 or Type 0 to PCI Express.

21.12.3.3 SUBBUS: Subordinate Bus Number Register

This register identifies the subordinate bus (if any) that resides at the level below the secondary bus of the PCI Express interface. This number is programmed by the PCI configuration software to allow mapping of configuration cycles to devices subordinate to the secondary PCI Express port.

Register: SUBBUS Device: 0-10 Function: 0 Offset: 1Ah			
Bit	**Attr**	**Default**	**Description**
7:0	RW	00h	**Subordinate Bus Number** This register is programmed by configuration software with the number of the highest subordinate bus that is behind the PCI Express port. Any transaction that falls between the secondary and subordinate bus number (both inclusive) of an Express port is forwarded to the express port.

21.12.3.4 IOBAS: I/O Base Register

The I/O Base and I/O Limit registers define an address range that is used by the PCI Express port to determine when to forward I/O transactions from one interface to the other using the following formula:

IO_BASE <= A[15:12]<=IO_LIMIT

The bottom of the defined I/O address range will be aligned to a 4KB (1KB if EN1K bit is set) boundary while the top of the region specified by IO_LIMIT will be one less than a 4 KB (1KB if EN1K bit is set) multiple. Setting the I/O limit less than I/O base disables the I/O range altogether.

Register: IOBAS
Device: 0-10
Function: 0
Offset: 1Ch

Bit	Attr	Default	Description
7:4	RW	0h	**I/O Base Address** Corresponds to A[15:12] of the I/O addresses at the PCI Express port.
3:2	RWL	0h	When EN1K is set (Refer to Section 21.6.5.6 for definition of EN1K bit), these bits become RW and allow for 1K granularity of I/O addressing, otherwise these are RO.
1:0	RO	0h	I/O Address capability IOH supports only 16 bit addressing

Note that in general the I/O base and limit registers won't be programmed by software without clearing the IOSE bit first.

21.12.3.5 IOLIM: I/O Limit Register

Register: IOLIM
Device: 0-10
Function: 0
Offset: 1Dh

Bit	Attr	Default	Description
7:4	RW	0h	**I/O Address Limit** Corresponds to A[15:12] of the I/O addresses at the PCI Express port.
3:2	RWL	0h	When EN1K is set, these bits become RW and allow for 1K granularity of I/O addressing, otherwise these bits are RO.
1:0	RO	0h	**I/O Address Limit Capability** IOH only supports 16 bit addressing

21.12.3.6 SECSTS: Secondary Status Register

Secondary Status register is a 16-bit status register that reports the occurrence of various events associated with the secondary side (that is, PCI Express/ESI side) of the "virtual" PCI-PCI bridge.

Register: SECSTS
Device: 0-10
Function: 0
Offset: 1Eh

Bit	Attr	Default	Description
15	RW1C	0	**Detected Parity Error** This bit is set by the IOH whenever it receives a poisoned TLP in the PCI Express port. This bit is set regardless of the state the Parity Error Response Enable bit in the Bridge Control register.
14	RW1C	0	**Received System Error** This bit is set by the IOH when it receives a ERR_FATAL or ERR_NONFATAL message.

Register: SECSTS Device: 0-10 Function: 0 Offset: 1Eh			
Bit	**Attr**	**Default**	**Description**
13	RW1C	0	**Received Master Abort Status** This bit is set when the PCI Express port receives a Completion with "Unsupported Request Completion" Status or when IOH master aborts a Type0 configuration packet that has a non-zero device number.
12	RW1C	0	**Received Target Abort Status** This bit is set when the PCI Express port receives a Completion with "Completer Abort" Status.
11	RW1C	0	**Signaled Target Abort Status** This bit is set when the PCI Express port sends a completion packet with a "Completer Abort" Status (including peer-to-peer completions that are forwarded from one port to another)
10:9	RO	00	**DEVSEL# Timing** Not applicable to PCI Express. Hardwired to 0
8	RW1C	0	**Master Data Parity Error Status** This bit is set by the PCI Express port on the secondary side (PCI Express link) if the Parity Error Response Enable bit (PERRE) is set in Bridge Control register and either of the following two conditions occurs: • The PCI Express port receives a Completion from PCI Express marked poisoned • The PCI Express port poisons a packet with data If the Parity Error Response Enable bit in Bridge Control Register is cleared, this bit is never set.
7	RO	0	**Fast Back-to-Back Transactions Capable Status** Not applicable to PCI Express. Hardwired to 0.
6	RV	0	Reserved
5	RO	0	**66 MHz capability Status** Not applicable to PCI Express. Hardwired to 0.
4:0	RV	0h	Reserved

21.12.3.7 MBAS: Memory Base

The Memory Base and Memory Limit registers define a memory mapped I/O non-prefetchable address range (32-bit addresses) and the IOH directs accesses in this range to the PCI Express port based on the following formula:

MEMORY_BASE <= A[31:20] <= MEMORY_LIMIT

The upper 12 bits of both the Memory Base and Memory Limit registers are read/write and corresponds to the upper 12 address bits, A[31:20] of 32-bit addresses. Thus, the bottom of the defined memory address range will be aligned to a 1 MB boundary and the top of the defined memory address range will be one less than a 1 MB boundary. Refer to Chapter 7 for further details on decoding.

Register: MBAS Device: 0-10 Function: 0 Offset: 20h			
Bit	**Attr**	**Default**	**Description**
15:4	RW	0h	Memory Base Address Corresponds to A[31:20] of the memory address on the PCI Express port.
3:0	RV	0h	Reserved

Setting the memory limit less than memory base disables the 32-bit memory range altogether.

Note: In general the memory base and limit registers won't be programmed by software without clearing the MSE bit first.

21.12.3.8 MLIM: Memory Limit

Register: MLIM Device: 0-10 Function: 0 Offset: 22h			
Bit	**Attr**	**Default**	**Description**
15:4	RW	0h	Memory Limit Address Corresponds to A[31:20] of the memory address that corresponds to the upper limit of the range of memory accesses that will be passed by the PCI Express bridge
3:0	RV	0h	*Reserved.* (by PCI SIG)

21.12.3.9 PBAS: Prefetchable Memory Base Register

The Prefetchable Memory Base and Memory Limit registers define a memory mapped I/O prefetchable address range (64-bit addresses) which is used by the PCI Express bridge to determine when to forward memory transactions based on the following

Formula:

PREFETCH_MEMORY_BASE_UPPER::PREFETCH_MEMORY_BASE <= A[63:20] <= PREFETCH_MEMORY_LIMIT_UPPER::PREFETCH_MEMORY_LIMIT

The upper 12 bits of both the Prefetchable Memory Base and Memory Limit registers are read/write and corresponds to the upper 12 address bits, A[31:20] of 32-bit addresses. The bottom of the defined memory address range will be aligned to a 1 MB boundary and the top of the defined memory address range will be one less than a 1 MB boundary.

Register: PBAS Device: 0-10 Function: 0 Offset: 24h			
Bit	**Attr**	**Default**	**Description**
15:4	RW	0h	Prefetchable Memory Base Address Corresponds to A[31:20] of the prefetchable memory address on the PCI Express port.
3:0	RO	1h	**Prefetchable Memory Base Address Capability** IOH sets this bit to 01h to indicate 64bit capability.

The bottom 4 bits of both the Prefetchable Memory Base and Prefetchable Memory Limit registers are read-only, contain the same value, and encode whether or not the bridge supports 64-bit addresses. If these four bits have the value 0h, then the bridge supports only 32 bit addresses. If these four bits have the value 01h, then the bridge supports 64-bit addresses and the Prefetchable Base Upper 32 Bits and Prefetchable Limit Upper 32 Bits registers hold the rest of the 64-bit prefetchable base and limit addresses respectively.

Setting the prefetchable memory limit less than prefetchable memory base disables the 64-bit prefetchable memory range altogether.

Note that in general the memory base and limit registers won't be programmed by software without clearing the MSE bit first.

21.12.3.10 PLIM: Prefetchable Memory Limit

Register: PLIM
Device: 0-10
Function: 0
Offset: 26h

Bit	Attr	Default	Description
15:4	RW	0h	Prefetchable Memory Limit Address Corresponds to A[31:20] of the memory address on the PCI Express bridge
3:0	RO	1h	Prefetchable Memory Limit Address Capability IOH sets this field to 01h to indicate 64bit capability.

21.12.3.11 PBASU: Prefetchable Memory Base (Upper 32 Bits)

The Prefetchable Base Upper 32 Bits and Prefetchable Limit Upper 32 Bits registers are extensions to the Prefetchable Memory Base and Prefetchable Memory Limit registers to support a 64-bit prefetchable memory address range.

Register: PBASU
Device: 0-10
Function: 0
Offset: 28h

Bit	Attr	Default	Description
31:0	RW	0h	Prefetchable Upper 32-bit Memory Base Address Corresponds to A[63:32] of the memory address that maps to the upper base of the prefetchable range of memory accesses that will be passed by the PCI Express bridge. OS should program these bits based on the available physical limits of the system.

21.12.3.12 PLIMU: Prefetchable Memory Limit (Upper 32 Bits)

Register: PLIMU
Device: 0-10
Function: 0
Offset: 2Ch

Bit	Attr	Default	Description
31:0	RW	0h	Prefetchable Upper 32-bit Memory Limit Address Corresponds to A[63:32] of the memory address that maps to the upper limit of the prefetchable range of memory accesses that will be passed by the PCI Express bridge. OS should program these bits based on the available physical limits of the system.

21.12.3.13 BCR: Bridge Control Register

The Bridge Control register provides additional control for the secondary interface (that is, PCI Express) as well as some bits that affect the overall behavior of the "virtual" PCI-PCI bridge embedded within the IOH, for example, VGA compatible address range mapping.

Register: BCR
Device: 0-10
Function: 0
Offset: 3Eh

Bit	Attr	Default	Description
15:12	RV	0h	*Reserved*
11	RO	0	Discard Timer SERR Status Not applicable to PCI Express. This bit is hardwired to 0.
10	RO	0	Discard Timer Status Not applicable to PCI Express. This bit is hardwired to 0.
9	RO	0	Secondary Discard Timer Status Not applicable to PCI Express. This bit is hardwired to 0.
8	RO	0	Primary Discard Timer Not applicable to PCI Express. This bit is hardwired to 0.
7	RO	0	Fast Back-to-Back Enable Not applicable to PCI Express. This bit is hardwired to 0.
6	RW	0	Secondary Bus Reset 1: Setting this bit triggers a hot reset on the link for the corresponding PCI Express port and the PCI Express hierarchy domain subordinate to the port. This sends the LTSSM into the Training (or Link) Control Reset state, which necessarily implies a reset to the downstream device and all subordinate devices. The transaction layer corresponding to port will be emptied by IOH when this bit is set. This means that in the outbound direction, all posted transactions are dropped and non-posted transactions are sent a UR response. In the inbound direction, completions for inbound NP requests are dropped when they arrive. Inbound posted writes are required to be flushed as well either by dropping the packets are by retiring them normally. Note also that a secondary bus reset will not reset the virtual PCI-to-PCI bridge configuration registers of the targeted PCI Express port. 0: No reset happens on the PCI Express port
5	RO	0	Master Abort Mode Not applicable to PCI Express. This bit is hardwired to 0.
4	RW	0	VGA 16-bit decode This bit enables the virtual PCI-to-PCI bridge to provide 16-bit decoding of VGA I/O address precluding the decoding of alias addresses every 1 KB. 0: execute 10-bit address decodes on VGA I/O accesses. 1: execute 16-bit address decodes on VGA I/O accesses. This bit only has meaning if bit 3 of this register is also set to 1, enabling VGA I/O decoding and forwarding by the bridge. Refer to *PCI-PCI Bridge Specification Revision 1.2* for further details of this bit behavior.
3	RW	0	VGA Enable Controls the routing of CPU initiated transactions targeting VGA compatible I/O and memory address ranges. This bit must only be set for one PCI Express port.

Register: BCR Device: 0-10 Function: 0 Offset: 3Eh			
Bit	**Attr**	**Default**	**Description**
2	RW	0	ISA Enable Modifies the response by the IOH to an I/O access issued by the CPU that target ISA I/O addresses. This applies only to I/O addresses that are enabled by the IOBASE and IOLIM registers. 1: The IOH will *not* forward to PCI Express any I/O transactions addressing the last 768 bytes in each 1KB block even if the addresses are within the range defined by the IOBASE and IOLIM registers. 0: All addresses defined by the IOBASE and IOLIM for CPU I/O transactions will be mapped to PCI Express.
1	RW	0	SERR Enable This bit controls forwarding of ERR_COR, ERR_NONFATAL and ERR_FATAL messages from the PCI Express port to the primary side. 1: Enables forwarding of ERR_COR, ERR_NONFATAL and ERR_FATAL messages. 0: Disables forwarding of ERR_COR, ERR_NONFATAL and ERR_FATAL
0	RW	0	Parity Error Response Enable IOH ignores this bit. This bit though affects the setting of bit 8 in the SECSTS register.

21.12.4 Device-Specific PCI Configuration Space - 0x40 to 0xFF

21.12.4.1 SCAPID: Subsystem Capability ID

Register: SCAPID Device: 0-10 Function: 0 Offset: 40h			
Bit	**Attr**	**Default**	**Description**
7:0	RO	0Dh	Capability ID Assigned by PCI-SIG for subsystem capability ID

21.12.4.2 SNXTPTR: Subsystem ID Next Pointer

Register: SNXTPTR Device: 0-10 Function: 0 Offset: 41h			
Bit	**Attr**	**Default**	**Description**
7:0	RO	60	Next Ptr This field is set to 60h for the next capability list (MSI capability structure) in the chain.

21.12.4.3 SVID: Subsystem Vendor ID

Register: SVID Device: 0-10 Function: 0 Offset: 44h			
Bit	**Attr**	**Default**	**Description**
7:0	RWO	8086h	Assigned by PCI-SIG for the subsystem vendor

21.12.4.4 SID: Subsystem Identity (Dev#0, PCIe mode and Dev#1-10)

Register: SID Device: 0-10 Function: 0 Offset: 46h			
Bit	**Attr**	**Default**	**Description**
7:0	RWO	00h	Assigned by the subsystem vendor to uniquely identify the subsystem

21.12.4.5 MSICAPID: MSI Capability ID

Register: MSICAPID Device: 1-10; N/A for 0 Function: 0 Offset: 60h			
Bit	**Attr**	**Default**	**Description**
7:0	RO	05h	Capability ID Assigned by PCI-SIG for MSI (root ports).

21.12.4.6 MSINXTPTR: MSI Next Pointer

Register: MSINXTPTR Device: 1-10; N/A for 0 Function: 0 Offset: 61h			
Bit	**Attr**	**Default**	**Description**
7:0	RO	90h	Next Ptr This field is set to 90h for the next capability list (PCI Express capability structure) in the chain.

21.12.4.7 MSICTL: MSI Control Register

Register: MSICTL
Device: 1-10; N/A for 0
Function: 0
Offset: 62h

Bit	Attr	Default	Description
15:9	RV	00h	*Reserved.*
8	RO	1	Per-vector masking capable This bit indicates that PCI Express ports support MSI per-vector masking
7	RO	0	64-bit Address Capable This field is hardwired to 0h since the message addresses are only 32-bit addresses (for example, FEEx_xxxxh).
6:4	RW	000	Multiple Message Enable Applicable only to PCI Express ports. Software writes to this field to indicate the number of allocated messages which is aligned to a power of two. When MSI is enabled, the software will allocate at least one message to the device. A value of 000 indicates 1 message. Any value greater than or equal to 001 indicates a message of 2.
3:1	RO	001	Multiple Message Capable IOH's Express ports support two messages for all their internal events.
0	RW	0	MSI Enable The software sets this bit to select platform-specific interrupts or transmit MSI messages. 0: Disables MSI from being generated. 1: Enables the Express port to use MSI messages for RAS, provided bit 4 in Section 21.6.3, "IOHMISCCTRL: IOH MISC Control Register" on page 336 is clear and also enables the Express port to use MSI messages for PM and HP events at the root port provided these individual events are not enabled for ACPI handling (see Section 21.6.3, "IOHMISCCTRL: IOH MISC Control Register" on page 336) for details.

21.12.4.8 MSIAR: MSI Address Register

The MSI Address Register (MSIAR) contains the system specific address information to route MSI interrupts from the root ports and is breaks into their constituent fields where interrupts are located.

Register: MSIAR
Device: 1-10
Function: 0
Offset: 64h

Bit	Attr	Default	Description
31:20	RW	0000h	Address MSB This field specifies the 12 most significant bits of the 32-bit MSI address. This field is R/W for compatibility reasons only.
19:12	RW	00h	Address Destination ID This field is initialized by software for routing the interrupts to the appropriate destination.
11:4	RW	00h	Address Extended Destination ID This field is not used by IA-32 processor.
3	RW	0h	Address Redirection Hint 0: Directed 1: Redirectable

Register: MSIAR Device: 1-10 Function: 0 Offset: 64h			
Bit	**Attr**	**Default**	**Description**
2	RW	0h	Address Destination Mode 0: Physical 1: Logical
1:0	RV	0h	*Reserved.*

21.12.4.9 MSIDR: MSI Data Register

The MSI Data Register contains all the data (interrupt vector) related to MSI interrupts from the root ports.

Register: MSIDR Device: 1-10 Function: 0 Offset: 68h			
Bit	**Attr**	**Default**	**Description**
31:16	RV	0h	*Reserved.*
15	RW	0h	Trigger Mode 0 - Edge Triggered 1 - Level Triggered IOH does nothing with this bit other than passing it along to Intel® QPI
14	RW	0h	**Level** 0 - Deassert 1: Assert IOH does nothing with this bit other than passing it along to Intel® QPI
13:12	RV	0h	Reserved
11:8	RW	0h	Delivery Mode 0000 – Fixed: Trigger Mode can be edge or level. 0001 – Lowest Priority: Trigger Mode can be edge or level. 0010 – SMI/PMI/MCA - Not supported via MSI of root port 0011 – Reserved - Not supported via MSI of root port 0100 – NMI - Not supported via MSI of root port 0101 – INIT - Not supported via MSI of root port 0110 – *Reserved* 0111 – ExtINT - Not supported via MSI of root port 1000-1111 - *Reserved*
7:0	RW	0h	Interrupt Vector The interrupt vector (LSB) will be modified by the IOH to provide context sensitive interrupt information for different events that require attention from the processor, for example, Hot plug, Power Management and RAS error events. Depending on the number of Messages enabled by the processor, Table 21-2 illustrates how IOH distributes these vectors

Table 21-29. MSI Vector Handling and Processing by IOH

Number of Messages enabled by Software	Events	IV[7:0]
1	All	xxxxxxxx[1]
2	HP, PM	xxxxxxx0
	AER	xxxxxxx1

Notes:

1. The term "xxxxxx" in the Interrupt vector denotes that software initializes them and IOH will not modify any of the "x" bits except the LSB as indicated in the table as a function of MMEN.

21.12.4.10 MSIMSK: MSI Mask Bit Register

The Mask Bit register enables software to disable message sending on a per-vector basis.

Register: MSIMSK
Device: 0-10
Function: 0
Offset: 6Ch

Bit	Attr	Default	Description
31:2	RV	0h	*Reserved*
1:0	RW	0h	Mask Bits : For each mask bit that is set, the PCI Express port is prohibited from sending the associated message.

21.12.4.11 MSIPENDING: MSI Pending Bit Register

The Mask Pending register enables software to defer message sending on a per-vector basis.

Register: MSIPENDING
Device: 0-10
Function: 0
Offset: 70h

Bit	Attr	Default	Description
31:2	RV	0h	*Reserved*
1:0	RO	0h	Pending Bits : For each pending bit that is set, the PCI Express port has a pending associated message.

21.12.4.12 PXPCAPID: PCI Express Capability List Register

The PCI Express Capability List register enumerates the PCI Express Capability structure in the PCI 3.0 configuration space.

Register: PXPCAPID Device: 0-10 Function: 0 Offset: 90h			
Bit	**Attr**	**Default**	**Description**
7:0	RO	10h	Capability ID Provides the PCI Express capability ID assigned by PCI-SIG.

21.12.4.13 PXPNXTPTR: PCI Express Next Capability List Register

The PCI Express Capability List register enumerates the PCI Express Capability structure in the PCI 3.0 configuration space.

Register: PXPNXTPTR Device: 0-10 Function: 0 Offset: 91h			
Bit	**Attr**	**Default**	**Description**
7:0	RO	E0h	Next Ptr This field is set to the PCI PM capability.

21.12.4.14 PXPCAP: PCI Express Capabilities Register

The PCI Express Capabilities register identifies the PCI Express device type and associated capabilities.

Register: PXPCAP Device: 0-10 Function: 0 Offset: 92h			
Bit	**Attr**	**Default**	**Description**
15:14	RV	0h	*Reserved*
13:9	RO	00h	Interrupt Message Number This field indicates the interrupt message number that is generated for PM/HP events. When there are more than one MSI interrupt Number, this register field is required to contain the offset between the base Message Data and the MSI Message that is generated when the status bits in the slot status register or root port status registers are set. IOH assigns the first vector for PM/HP events and so this field is set to 0.
8	RWO	0	Slot Implemented Applies only to the root ports: 1: indicates that the PCI Express link associated with the port is connected to a slot. 0: indicates no slot is connected to this port. This register bit is of type “write once” and is controlled by BIOS/special initialization firmware.
7:4	RO	0100	Device/Port Type This field identifies the type of device. It is set to 0100 for all the PCI Express ports.
3:0	RO	2h	Capability Version This field identifies the version of the PCI Express capability structure. Set to 2h for PCI Express for compliance with the extended base registers.

21.12.4.15 DEVCAP: PCI Express Device Capabilities Register

The PCI Express Device Capabilities register identifies device specific information for the device.

Register: DEVCAP
Device: 0-10
Function: 0
Offset: 94h

Bit	Attr	Default	Description
31:28	RV	0h	*Reserved*
27:26	RO	0h	Captured Slot Power Limit Scale Does not apply to root ports or integrated devices
25:18	RO	00h	Captured Slot Power Limit Value Does not apply to root ports or integrated devices
17:16	RV	0h	Reserved
15	RO	1	**Role Based Error Reporting:** IOH is 1.1 compliant and so supports this feature
14	RO	0	Power Indicator Present on Device Does not apply to root ports or integrated devices
13	RO	0	Attention Indicator Present Does not apply to root ports or integrated devices
12	RO	0	Attention Button Present Does not apply to root ports or integrated devices
11:9	RO	000	**Endpoint L1 Acceptable Latency** Does not apply to IOH
8:6	RO	000	Endpoint L0s Acceptable Latency Does not apply to IOH
5	RO	1	Extended Tag Field Supported IOH devices support 8-bit tag
4:3	RO	0h	Phantom Functions Supported IOH does not support phantom functions.
2:0	RO	001 (Dev#1-10), 000 (Dev#0)	Max Payload Size Supported IOH supports 256B payloads on Express port and 128B on the remainder of the devices.

21.12.4.16 DEVCTRL: PCI Express Device Control Register

The PCI Express Device Control register controls PCI Express specific capabilities parameters associated with the device.

Register: DEVCTRL
Device: 0-10
Function: 0
Offset: 98h

Bit	Attr	Default	Description
15	RV	0h	*Reserved.*
14:12	RO	000	Max_Read_Request_Size Express/ESI ports in IOH do not generate requests greater than 128B and this field is ignored.

Register: DEVCTRL
Device: 0-10
Function: 0
Offset: 98h

Bit	Attr	Default	Description
11	RO	0	Enable No Snoop Not applicable to root ports since they never set the 'No Snoop' bit for transactions they originate (not forwarded from peer) to PCI Express. This bit has no impact on forwarding of NoSnoop attribute on peer requests.
10	RO	0	Auxiliary Power Management Enable Not applicable to IOH
9	RO	0	Phantom Functions Enable Not applicable to IOH since it never uses phantom functions as a requester.
8	RW	0h	Extended Tag Field Enable This bit enables the PCI Express port/ESI to use an 8-bit Tag field as a requester.
7:5	RW (Dev#1-10) RO (Dev#0)	000	**Max Payload Size** This field is set by configuration software for the maximum TLP payload size for the PCI Express port. As a receiver, the IOH must handle TLPs as large as the set value. As a requester (that is, for requests where IOH's own RequesterID is used), it must not generate TLPs exceeding the set value. Permissible values that can be programmed are indicated by the Max_Payload_Size_Supported in the Device Capabilities register: 000: 128B max payload size 001: 256B max payload size (applies only to standard PCI Express ports and other devices alias to 128B) others: alias to 128B
4	RO	0	Enable Relaxed Ordering Not applicable to root ports since they never set relaxed ordering bit as a requester (this does not include tx forwarded from peer devices). This bit has no impact on forwarding of relaxed ordering attribute on peer requests.
3	RW	0	Unsupported Request Reporting Enable Applies only to the PCI Express/ESI ports. This bit controls the reporting of unsupported requests that IOH itself detects on requests its receives from a PCI Express/ESI port. 0: Reporting of unsupported requests is disabled 1: Reporting of unsupported requests is enabled. Refer to *PCI Express Base Specification, Revision 1.1 and post 1.1 Erratas and EC*'s* for complete details of how this bit is used in conjunction with other bits to UR errors.
2	RW	0	**Fatal Error Reporting Enable** Applies only to the PCI Express/ESI ports. Controls the reporting of fatal errors that IOH detects on the PCI Express/ESI interface. 0: Reporting of Fatal error detected by device is disabled 1: Reporting of Fatal error detected by device is enabled Refer to *PCI Express Base Specification, Revision 1.1 and post 1.1 Erratas and EC*'s* for complete details of how this bit is used in conjunction with other bits to report errors. For the PCI Express/ESI ports, this bit is not used to control the reporting of other internal component uncorrectable fatal errors (at the port unit) in any way.

Register: DEVCTRL Device: 0-10 Function: 0 Offset: 98h			
Bit	**Attr**	**Default**	**Description**
1	RW	0	**Non Fatal Error Reporting Enable** Applies only to the PCI Express/ESI ports. Controls the reporting of non-fatal errors that IOH detects on the PCI Express/ESI interface. 0: Reporting of Non Fatal error detected by device is disabled 1: Reporting of Non Fatal error detected by device is enabled Refer to *PCI Express Base Specification, Revision 1.1 and post 1.1 Erratas and EC*'s* for complete details of how this bit is used in conjunction with other bits to report errors. For the PCI Express/ESI ports, this bit is not used to control the reporting of other internal component uncorrectable non-fatal errors (at the port unit) in any way.
0	RW	0	**Correctable Error Reporting Enable** Applies only to the PCI Express/ESI ports. Controls the reporting of correctable errors that IOH detects on the PCI Express/ESI interface 0: Reporting of link Correctable error detected by the port is disabled 1: Reporting of link Correctable error detected by port is enabled Refer to *PCI Express Base Specification, Revision 1.1 and post 1.1 Erratas and EC*'s* for complete details of how this bit is used in conjunction with other bits to report errors. For the PCI Express/ESI ports, this bit is not used to control the reporting of other internal component correctable errors (at the port unit) in any way.

21.12.4.17 DEVSTS: PCI Express Device Status Register

The PCI Express Device Status register provides information about PCI Express device specific parameters associated with the device.

Register: DEVSTS Device: 0-10 Function: 0 Offset: 9Ah			
Bit	**Attr**	**Default**	**Description**
15:6	RV	0h	*Reserved.*
5	RO	0h	**Transactions Pending**: Does not apply to root/ESI ports or I/OxAPIC devices, that is, bit hardwired to 0 for these devices.
4	RO	0	AUX Power Detected Does not apply to IOH
3	RW1C	0	Unsupported Request Detected This bit applies only to the root/ESI ports and does not apply to I/OxAPIC device. This bit indicates that the root port detected an Unsupported Request. Errors are logged in this register regardless of whether error reporting is enabled or not in the Device Control Register. 1: Unsupported Request detected at the device/port. These unsupported requests are NP requests inbound that the root port received and it detected them as unsupported requests (for example, address decoding failures that the root port detected on a packet, receiving inbound lock reads, BME bit is clear, and so on). Note that this bit is not set on peer-to-peer completions with UR status that are forwarded by the root port to the PCIe link. 0: No unsupported request detected by the root port
2	RW1C	0	Fatal Error Detected This bit indicates that a fatal (uncorrectable) error is detected by the device. Errors are logged in this register regardless of whether error reporting is enabled or not in the Device Control register. 1: Fatal errors detected 0: No Fatal errors detected

Register: DEVSTS Device: 0-10 Function: 0 Offset: 9Ah			
Bit	**Attr**	**Default**	**Description**
1	RW1C	0	Non Fatal Error Detected This bit gets set if a non-fatal uncorrectable error is detected by the device. Errors are logged in this register regardless of whether error reporting is enabled or not in the Device Control register. 1: Non Fatal errors detected 0: No non-Fatal Errors detected
0	RW1C	0	Correctable Error Detected This bit gets set if a correctable error is detected by the device. Errors are logged in this register regardless of whether error reporting is enabled or not in the PCI Express Device Control register. 1: correctable errors detected 0: No correctable errors detected

21.12.4.18 LNKCAP: PCI Express Link Capabilities Register

The Link Capabilities register identifies the PCI Express specific link capabilities.

Register: LNKCAP Device: 0-10 Function: 0 Offset: 9Ch			
Bit	**Attr**	**Default**	**Description**
31:24	RWO	0	Port Number This field indicates the PCI Express port number for the link and is initialized by software/BIOS.
23:22	RV	0h	*Reserved.*
21	RO	1	**Link Bandwidth Notification Capability** - A value of 1b indicates support for the Link Bandwidth Notification status and interrupt mechanisms.
20	RO	1	Data Link Layer Link Active Reporting Capable: IOH supports reporting status of the data link layer so software knows when it can enumerate a device on the link or otherwise know the status of the link.
19	RO	1	**Surprise Down Error Reporting Capable:** IOH supports reporting a surprise down error condition
18	RO	0	**Clock Power Management:** Does not apply to IOH.
17:15	RO	010h	L1 Exit Latency This field indicates the L1 exit latency for the given PCI Express port. It indicates the length of time this port requires to complete transition from L1 to L0. 000: Less than 1 001: 1 ìs to less than 2 010: 2 ìs to less than 4 011: 4 ìs to less than 8 100: 8 ìs to less than 16 101: 16 ìs to less than 32 110: 32 ìs to 64 111: More than 64us

Register: LNKCAP Device: 0-10 Function: 0 Offset: 9Ch			
Bit	**Attr**	**Default**	**Description**
14:12	RO	7h	L0s Exit Latency
11:10	RO	1	Active State Link PM Support L0s and L1 is supported
9:4	RO	0	**Maximum Link Width** This field indicates the maximum width of the given PCI Express Link attached to the port. 000001: x1 000010: x2[1] 000100: x4 001000: x8 010000: x16 Others - *Reserved* This is left as a RWO register for bios to update based on the platform usage of the links.
3:0	RO	0	**Link Speeds Supported** IOH supports both 2.5 Gbps and 5 Gbps speeds if Gen2_OFF is OFF else it supports only Gen1 This register is RWO when Gen2_OFF is OFF, so that BIOS can change the supported speeds field to be 0001b (Gen1 only) if the board routing is not capable of Gen2 (even though IOH silicon itself is capable of Gen2)

Notes:

1. There are restrictions with routing x2 lanes from IOH to a slot. See Chapter 5 for details.

21.12.4.19 LNKCON: PCI Express Link Control Register

The PCI Express Link Control register controls the PCI Express Link specific parameters.

Register: LNKCON Device: 0-10 Function: 0 Offset: A0h			
Bit	**Attr**	**Default**	**Description**
15:12	RV	0	Reserved
11	RW	0	**Link Autonomous Bandwidth Interrupt Enable** - When set to 1b, this bit enables the generation of an interrupt to indicate that the Link Autonomous Bandwidth Status bit has been set.
10	RW	0	**Link Bandwidth Management Interrupt Enable** - When set to 1b, this bit enables the generation of an interrupt to indicate that the Link Bandwidth Management Status bit has been set.
9	RW	0	**Hardware Autonomous Width Disable** - IOH never changes a configured link width for reasons other than reliability.
8	RO	0	Enable Clock Power Management N/A to IOH
7	RW	0	Extended Synch When this bit set forces the transmission of additional ordered sets when exiting L0s and when in recovery. See *PCI Express Base Specification, Revision 1.1 and post 1.1 Erratas and EC*'s* for details.

Register: LNKCON Device: 0-10 Function: 0 Offset: A0h			
Bit	**Attr**	**Default**	**Description**
6	RW	0	Common Clock Configuration When set, this bit indicates that this component and the component at the opposite side of the Link are operating with a distributed common reference clock. A value of 0b indicates this component and the component at the opposite end of this Link are operating with asynchronous reference clock. Components utilize this common clock configuration information to report the correct L0s and L1 Exit Latencies. After changing the value in this bit in both components on a Link, software must trigger the Link to retrain by writing a 1b to the Retrain Link bit.
5	WO	0	Retrain Link A write of 1 to this bit initiates link retraining in the given PCI Express port by directing the LTSSM to the recovery state if the current state is [L0, L0s or L1]. If the current state is anything other than L0, L0s, L1 then a write to this bit does nothing. This bit always returns 0 when read. If the Target Link Speed field has been set to a non-zero value different than the current operating speed, then the LTSSM will attempt to negotiate to the target link speed. It is permitted to write 1b to this bit while simultaneously writing modified values to other fields in this register. When this is done, all modified values that affect link retraining must be applied in the subsequent retraining.
4	RW	0	Link Disable This field controls whether the link associated with the PCI Express port is enabled or disabled. When this bit is a 1, a previously configured link (a link that has gone past the polling state) would return to the “disabled” state as defined in the *PCI Express Base Specification, Revision 1.1 and post 1.1 Erratas and EC*'s*. When this bit is clear, an LTSSM in the “disabled” state goes back to the detect state. 0: Enables the link associated with the PCI Express port 1: Disables the link associated with the PCI Express port
3	RO	0	Read Completion Boundary Set to zero to indicate IOH could return read completions at 64B boundaries.
2	RV	0	*Reserved.*
1:0	RW	00	**Active State Link PM Control**: Writing to these bits has no effect in ESI mode. Device 1-10: When 00, Disabled Device 1-10: When 01, L0s on transmitter is enabled Device 1-10: When 10, L1 on transmitter is enabled Device 1-10: When 11, L0s and L1 on transmitter is enabled

21.12.4.20 LNKSTS: PCI Express Link Status Register

The PCI Express Link Status register provides information on the status of the PCI Express Link such as negotiated width, training, and so on.

Register: LNKSTS
Device: 0-10
Function: 0
Offset: A2h

Bit	Attr	Default	Description
15	RO	0	**Link Autonomous Bandwidth Status** - This bit is set to 1b by hardware to indicate that hardware has autonomously changed link speed or width, without the port transitioning through DL_Down status, for reasons other than to attempt to correct unreliable link operation. IOH sets this bit when it receives eight consecutive TS1 or TS2 ordered sets with the Autonomous Change bit set. Note that if the status bit is set by hardware in the same clock software clears the status bit, the status bit should remain set and if MSI is enabled, the hardware should trigger a new MSI.
14	RO	0	**Link Bandwidth Management Status** - This bit is set to 1b by hardware to indicate that either of the following has occurred without the port transitioning through DL_Down status: a) A link retraining initiated by a write of 1b to the Retrain Link bit has completed b) Hardware has autonomously changed link speed or width to attempt to correct unreliable link operation Note that if the status bit is set by hardware in the same clock software clears the status bit, the status bit should remain set and if MSI is enabled, the hardware should trigger a new MSI.
13	RO	0	Data Link Layer Link Active Set to 1b when the Data Link Control and Management State Machine is in the DL_Active state, 0b otherwise. On a downstream port or upstream port, when this bit is 0b, the transaction layer associated with the link will abort all transactions that would otherwise be routed to that link.
12	RO	1	Slot Clock Configuration This bit indicates whether IOH receives clock from the same xtal that also provides clock to the device on the other end of the link. 1: indicates that same xtal provides clocks to devices on both ends of the link 0: indicates that different xtals provide clocks to devices on both ends of the link
11	RO	0	Link Training This field indicates the status of an ongoing link training session in the PCI Express port 0: LTSSM has exited the recovery/configuration state 1: LTSSM is in recovery/configuration state or the Retrain Link was set but training has not yet begun. The IOH hardware clears this bit once LTSSM has exited the recovery/configuration state. Refer to *PCI Express Base Specification, Revision 1.1 and post 1.1 Erratas and EC*'s* for details of which states within the LTSSM would set this bit and which states would clear this bit.
10	RV	0	Reserved
9:4	RO	0x0	Negotiated Link Width This field indicates the negotiated width of the given PCI Express link after training is completed. Only x1, x2, x4, x8 and x16 link width negotiations are possible in IOH. A value of 0x01 in this field corresponds to a link width of x1, 0x02 indicates a link width of x2 and so on, with a value of 0x8 for a link width of x8. The value in this field is reserved and could show any value when the link is not up. Software determines if the link is up or not by reading bit 13 of this register.

Register: LNKSTS Device: 0-10 Function: 0 Offset: A2h			
Bit	**Attr**	**Default**	**Description**
3:0	RO	0x0	Current Link Speed This field indicates the negotiated Link speed of the given PCI Express Link. 0001- 2.5 Gbps 0010 - 5 Gbps Others - *Reserved* The value in this field is not defined and could show any value, when the link is not up. Software determines if the link is up or not by reading bit 13 of this register.

21.12.4.21 SLTCAP: PCI Express Slot Capabilities Register

The Slot Capabilities register identifies the PCI Express specific slot capabilities. These registers must be ignored by software on the ESI links.

Register: SLTCAP Device: 0-10 Function: 0 Offset: A4h			
Bit	**Attr**	**Default**	**Description**
31:19	RO	0h	Physical Slot Number This field indicates the physical slot number of the slot connected to the PCI Express port and is initialized by bios.
18	RO	0h	**Command Complete Not Capable**: IOH is capable of command complete interrupt.
17	RO	0h	Electromechanical Interlock Present This bit when set indicates that an Electromechanical Interlock is implemented on the chassis for this slot and that lock is controlled by bit 11 in Slot Control register. Bios note: this capability is not set if the Electromechanical Interlock control is connected to main slot power control.
16:15	RO	0h	Slot Power Limit Scale This field specifies the scale used for the Slot Power Limit Value and is initialized by bios. IOH uses this field when it sends a Set_Slot_Power_Limit message on PCI Express. Range of Values: 00: 1.0x 01: 0.1x 10: 0.01x 11: 0.001x
14:7	RO	00h	Slot Power Limit Value This field specifies the upper limit on power supplied by slot in conjunction with the Slot Power Limit Scale value defined previously Power limit (in Watts) = SPLS x SPLV. This field is initialized by bios. IOH uses this field when it sends a Set_Slot_Power_Limit message on PCI Express. Design note: IOH can chose to send the Set_Slot_Power_Limit message on the link at first link up condition without regards to whether this register and the Slot Power Limit Scale register are programmed yet by bios. IOH must then be designed to discard a received Set_Slot_Power_Limit message without an error.
6	RO	0h	Hot-plug Capable This field defines hot-plug support capabilities for the PCI Express port. 0: indicates that this slot is not capable of supporting Hot-plug operations. 1: indicates that this slot is capable of supporting Hot-plug operations This bit is programed by BIOS based on the system design. This bit must be programmed by bios to be consistent with the VPP enable bit for the port.

Register: SLTCAP Device: 0-10 Function: 0 Offset: A4h			
Bit	**Attr**	**Default**	**Description**
5	RO	0h	Hot-plug Surprise This field indicates that a device in this slot may be removed from the system without prior notification (like for instance a PCI Express cable). 0: indicates that hot-plug surprise is not supported 1: indicates that hot-plug surprise is supported Note that if platform implemented cable solution (either direct or via a SIOM with repeater), on a port, then this could be set. BIOS programs this field with a 0 for CEM/SIOM FFs. This bit is used by IOH hardware to determine if a transition from DL_active to DL_Inactive is to be treated as a surprise down error or not. If a port is associated with a hotpluggable slot and the hotplug surprise bit is set, then any transition to DL_Inactive is not considered an error. Refer to *PCI Express Base Specification, Revision 1.1 and post 1.1 Erratas and EC*'s* for further details.
4	RO	0h	**Power Indicator Present** This bit indicates that a Power Indicator is implemented for this slot and is electrically controlled by the chassis. 0: indicates that a Power Indicator, which is electrically controlled by the chassis is not present 1: indicates that Power Indicator, which is electrically controlled by the chassis is present BIOS programs this field with a 1 for CEM/SIOM FFs and a 0 for Express cable.
3	RO	0h	Attention **Indicator Present** This bit indicates that an Attention Indicator is implemented for this slot and is electrically controlled by the chassis 0: indicates that an Attention Indicator, which is electrically controlled by the chassis is not present 1: indicates that an Attention Indicator, which is electrically controlled by the chassis is present BIOS programs this field with a 1 for CEM/SIOM FFs.
2	RO	0h	MRL Sensor **Present** This bit indicates that an MRL Sensor is implemented on the chassis for this slot. 0: indicates that an MRL Sensor is not present 1: indicates that an MRL Sensor is present BIOS programs this field with a 0 for SIOM/Express cable and with either 0 or 1 for CEM depending on system design.
1	RO	0h	Power Controller **Present** This bit indicates that a software controllable power controller is implemented on the chassis for this slot. 0: indicates that a software controllable power controller is not present 1: indicates that a software controllable power controller is present BIOS programs this field with a 1 for CEM/SIOM FFs and a 0 for Express cable.
0	RO	0h	Attention Button **Present** This bit indicates that the Attention Button event signal is routed (from slot or on-board in the chassis) to the IOH's hotplug controller. 0: indicates that an Attention Button signal is routed to IOH 1: indicates that an Attention Button is not routed to IOH

21.12.4.22 SLTCON: PCI Express Slot Control Register

The Slot Control register identifies the PCI Express specific slot control parameters for operations such as Hot-plug and Power Management.

Register: SLTCON
Device: 1-10
Function: 0
Offset: A8h

Bit	Attr	Default	Description
15:13	RV	0h	*Reserved.*
12	RO	0	**Data Link Layer State Changed Enable** – When set to 1, this field enables software notification when Data Link Layer Link Active field is changed. Note: This bit should be RO for ESI. However this bit is implemented as a RW bit and hence SW should not write to this bit.
11	RO	0	**Electromechanical Interlock Control** When software writes either a 1 to this bit, IOH pulses the EMIL pin per *PCI Express Server/Workstation Module Electromechanical Spec Rev 0.5a*. Write of 0 has no effect. This bit always returns a 0 when read. If electromechanical lock is not implemented, then either a write of 1 or 0 to this register has no effect. Note: This bit should be RO for ESI. However this bit is implemented as a RW bit and hence SW should not write to this bit.
10	RO	1	Power Controller Control If a power controller is implemented, when written sets the power state of the slot per the defined encodings. Reads of this field must reflect the value from the latest write, even if the corresponding hot-plug command is not executed yet at the VPP, unless software issues a write without waiting for the previous command to complete in which case the read value is undefined. 1: Power Off 0: Power On Note: This bit should be RO for ESI. However this bit is implemented as a RW bit and hence SW should not write to this bit.
9:8	RO	3h	Power Indicator Control If a Power Indicator is implemented, writes to this register set the Power Indicator to the written state. Reads of this field must reflect the value from the latest write, even if the corresponding hot-plug command is not executed yet at the VPP, unless software issues a write without waiting for the previous command to complete in which case the read value is undefined. 00: *Reserved.* 01: On 10: Blink (IOH drives 1.5 Hz square wave for Chassis mounted LEDs) 11: Off When this register is written, the event is signaled via the virtual pins[1] of the IOH over a dedicated SMBus port. IOH does not generate the Power_Indicator_On/Off/Blink messages on PCI Express when this field is written to by software. Note: This bit should be RO for ESI. However this bit is implemented as a RW bit and hence SW should not write to this bit.

Register: SLTCON Device: 1-10 Function: 0 Offset: A8h			
Bit	**Attr**	**Default**	**Description**
7:6	RO	3h	Attention Indicator Control If an Attention Indicator is implemented, writes to this register set the Attention Indicator to the written state. Reads of this field reflect the value from the latest write, even if the corresponding hot-plug command is not executed yet at the VPP, unless software issues a write without waiting for the previous command to complete in which case the read value is undefined. 00: *Reserved.* 01: On 10: Blink (The IOH drives 1.5 Hz square wave) 11: Off When this register is written, the event is signaled via the virtual pins[1] of the IOH over a dedicated SMBus port. IOH does not generated the Attention_Indicator_On/Off/Blink messages on PCI Express when this field is written to by software. Note: This bit should be RO for ESI. However this bit is implemented as a RW bit and hence SW should not write to this bit.
5	RO	0h	Hot-plug Interrupt Enable When set to 1b, this bit enables generation of Hot-Plug MSI interrupt (and not wake event) on enabled Hot-Plug events, provided ACPI mode for hotplug is disabled. 0: disables interrupt generation on Hot-plug events 1: enables interrupt generation on Hot-plug events
4	RO	0h	Command Completed Interrupt Enable This field enables the generation of Hot-plug interrupts (and not wake event) when a command is completed by the Hot-plug controller connected to the PCI Express port 0: disables hot-plug interrupts on a command completion by a hot-plug Controller 1: Enables hot-plug interrupts on a command completion by a hot-plug Controller Note: This bit should be RO for ESI. However this bit is implemented as a RW bit and hence SW should not write to this bit.
3	RO	0h	**Presence Detect Changed Enable** This bit enables the generation of hot-plug interrupts or wake messages via a presence detect changed event. 0: disables generation of hot-plug interrupts or wake messages when a presence detect changed event happens. 1- Enables generation of hot-plug interrupts or wake messages when a presence detect changed event happens.
2	RO	0h	MRL Sensor Changed Enable This bit enables the generation of hot-plug interrupts or wake messages via a MRL Sensor changed event. 0: disables generation of hot-plug interrupts or wake messages when an MRL Sensor changed event happens. 1: Enables generation of hot-plug interrupts or wake messages when an MRL Sensor changed event happens. Note: This bit should be RO for ESI. However this bit is implemented as a RW bit and hence SW should not write to this bit.
1	RO	0h	Power Fault Detected Enable This bit enables the generation of hot-plug interrupts or wake messages via a power fault event. 0: disables generation of hot-plug interrupts or wake messages when a power fault event happens. 1: Enables generation of hot-plug interrupts or wake messages when a power fault event happens. Note: This bit should be RO for ESI. However this bit is implemented as a RW bit and hence SW should not write to this bit.

Register: SLTCON Device: 1-10 Function: 0 Offset: A8h			
Bit	**Attr**	**Default**	**Description**
0	RO	0h	Attention Button **Pressed** Enable This bit enables the generation of hot-plug interrupts or wake messages via an attention button pressed event. 0: disables generation of hot-plug interrupts or wake messages when the attention button is pressed. 1: Enables generation of hot-plug interrupts or wake messages when the attention button is pressed. Note: This bit should be RO for ESI. However this bit is implemented as a RW bit and hence SW should not write to this bit.

Notes:

1. More information on Virtual pins can be found in Section 16.8.2.

21.12.4.23 SLTSTS: PCI Express Slot Status Register (Dev #0 ESI mode)

The PCI Express Slot Status register defines important status information for operations such as Hot-plug and Power Management.

Note: Hot Plug is not supported on the ESI port so all bits are read only and default to zero.

Register: SLTSTS (ESI Only) Device: 0 Function: 0 Offset: AAh			
Bit	**Attr**	**Default**	**Description**
15:9	RV	0h	*Reserved.*
8	RO	0h	Data Link Layer State Changed This bit is set (if it is not already set) when the state of the Data Link Layer Link Active bit in the Link Status register changes. Software must read Data Link Layer Active field to determine the link state before initiating configuration cycles to the hot plugged device.
7	RO	0h	Electromechanical Latch Status When read this register returns the current state of the Electromechanical Interlock (the EMILS pin) which has the defined encodings as: 0b Electromechanical Interlock Disengaged 1b Electromechanical Interlock Engaged
6	RO	0h	**Presence Detect State** For ports with slots (where the Slot Implemented bit of the PCI Express Capabilities Registers is 1b), this field is the logical OR of the Presence Detect status determined via an in-band mechanism and sideband Present Detect pins. Refer to how *PCI Express Base Specification, Revision 1.1 and post 1.1 Erratas and EC*'s* for how the inband presence detect mechanism works (certain states in the LTSSM constitute "card present" and others don't). 0: Card/Module/Cable slot empty or Cable Slot occupied but not powered 1: Card/module Present in slot (powered or unpowered) or cable present and powered on other end For ports with no slots, IOH hardwires this bit to 1b. Note: OS could get confused when it sees an empty PCI Express root port that is, "no slots + no presence", since this is now disallowed in the spec. So bios must hide all unused root ports devices in IOH config space, via the DEVHIDE register in Intel® QPI CSR space.
5	RO	0h	MRL Sensor State This bit reports the status of an MRL sensor if it is implemented. 0: MRL Closed 1: MRL Open

Register: SLTSTS (ESI Only) Device: 0 Function: 0 Offset: AAh			
Bit	**Attr**	**Default**	**Description**
4	RO	0h	Command Completed This bit is set by the IOH when the hot-plug command has completed and the hot-plug controller is ready to accept a subsequent command. It is subsequently cleared by software after the field has been read and processed. This bit provides no guarantee that the action corresponding to the command is complete.
3	RO	0h	**Presence Detect Changed** This bit is set by the IOH when a Presence Detect Changed event is detected. It is subsequently cleared by software after the field has been read and processed. On-board logic per slot must set the VPP signal corresponding this bit inactive if the FF/system does not support out-of-band presence detect.
2	RO	0h	MRL Sensor Changed This bit is set by the IOH when an MRL Sensor Changed event is detected. It is subsequently cleared by software after the field has been read and processed. On-board logic per slot must set the VPP signal corresponding this bit inactive if the FF/system does not support MRL.
1	RO	0h	Power Fault Detected This bit is set by the IOH when a power fault event is detected by the power controller. It is subsequently cleared by software after the field has been read and processed. On-board logic per slot must set the VPP signal corresponding this bit inactive if the FF/system does not support power fault detection.
0	RO	0h	Attention Button **Pressed** This bit is set by the IOH when the attention button is pressed. It is subsequently cleared by software after the field has been read and processed. On-board logic per slot must set the VPP signal corresponding this bit inactive if the FF/system does not support attention button. IOH silently discards the Attention_Button_Pressed message if received from PCI Express link without updating this bit.

21.12.4.24 SLTSTS: PCI Express Slot Status Register (Dev #0 PCIe mode and Dev #1-10)

The PCI Express Slot Status register defines important status information for operations such as Hot-plug and Power Management.

Register: SLTSTS Device: 0 (PICe only) Device: 1-10 Function: 0 Offset: AAh			
Bit	**Attr**	**Default**	**Description**
15:9	RV	0h	*Reserved.*
8	RW1C	0h	Data Link Layer State Changed This bit is set (if it is not already set) when the state of the Data Link Layer Link Active bit in the Link Status register changes. Software must read Data Link Layer Active field to determine the link state before initiating configuration cycles to the hot plugged device.

Register: SLTSTS Device: 0 (PICe only) Device: 1-10 Function: 0 Offset: AAh			
Bit	**Attr**	**Default**	**Description**
7	RO	0h	Electromechanical Latch Status When read this register returns the current state of the Electromechanical Interlock (the EMILS pin) which has the defined encodings as: 0b Electromechanical Interlock Disengaged 1b Electromechanical Interlock Engaged
6	RO	0h	**Presence Detect State** For ports with slots (where the Slot Implemented bit of the PCI Express Capabilities Registers is 1b), this field is the logical OR of the Presence Detect status determined via an in-band mechanism and sideband Present Detect pins. Refer to how *PCI Express Base Specification, Revision 1.1 and post 1.1 Erratas and EC*'s* for how the inband presence detect mechanism works (certain states in the LTSSM constitute "card present" and others don't). 0: Card/Module/Cable slot empty or Cable Slot occupied but not powered 1: Card/module Present in slot (powered or unpowered) or cable present and powered on other end For ports with no slots, IOH hardwires this bit to 1b. Note: OS could get confused when it sees an empty PCI Express root port that is, "no slots + no presence", since this is now disallowed in the spec. So bios must hide all unused root ports devices in IOH config space, via the DEVHIDE register in Intel® QPI CSR space.
5	RO	0h	MRL Sensor State This bit reports the status of an MRL sensor if it is implemented. 0: MRL Closed 1: MRL Open
4	RW1C	0h	Command Completed This bit is set by the IOH when the hot-plug command has completed and the hot-plug controller is ready to accept a subsequent command. It is subsequently cleared by software after the field has been read and processed. This bit provides no guarantee that the action corresponding to the command is complete.
3	RW1C	0h	**Presence Detect Changed** This bit is set by the IOH when a Presence Detect Changed event is detected. It is subsequently cleared by software after the field has been read and processed. On-board logic per slot must set the VPP signal corresponding this bit inactive if the FF/system does not support out-of-band presence detect.
2	RW1C	0h	MRL Sensor Changed This bit is set by the IOH when an MRL Sensor Changed event is detected. It is subsequently cleared by software after the field has been read and processed. On-board logic per slot must set the VPP signal corresponding this bit inactive if the FF/system does not support MRL.
1	RW1C	0h	Power Fault Detected This bit is set by the IOH when a power fault event is detected by the power controller. It is subsequently cleared by software after the field has been read and processed. On-board logic per slot must set the VPP signal corresponding this bit inactive if the FF/system does not support power fault detection.
0	RW1C	0h	Attention Button **Pressed** This bit is set by the IOH when the attention button is pressed. It is subsequently cleared by software after the field has been read and processed. On-board logic per slot must set the VPP signal corresponding this bit inactive if the FF/system does not support attention button. IOH silently discards the Attention_Button_Pressed message if received from PCI Express link without updating this bit.

21.12.4.25 ROOTCON: PCI Express Root Control Register

The PCI Express Root Control register specifies parameters specific to the root complex port.

Register: ROOTCON
Device: 0-10
Function: 0
Offset: ACh

Bit	Attr	Default	Description
15:5	RV	0h	*Reserved.*
4	RW	0h	CRS software visibility Enable This bit, when set, enables the Root Port to return Configuration Request Retry Status (CRS) Completion Status to software. If 0, retry status cannot be returned to software
3	RW	0h	**PME Interrupt Enable** (Applies only to devices 0-7. This bit is a don't care for device 8) This field controls the generation of MSI interrupts for PME messages. 1: Enables interrupt generation upon receipt of a PME message 0: Disables interrupt generation for PME messages.
2	RW	0h	**System Error on Fatal Error Enable** This field enables notifying the internal core error logic of occurrence of an uncorrectable fatal error at the port or below its hierarchy. The internal core error logic of IOH then decides if/how to escalate the error further (pins/message etc). Refer to Chapter 16 for details of how/which system notification is generated for a PCI Express/ESI fatal error. 1: indicates that a internal core error logic notification should be generated if a fatal error (ERR_FATAL) is reported by any of the devices in the hierarchy associated with and including this port. 0: No internal core error logic notification should be generated on a fatal error (ERR_FATAL) reported by any of the devices in the hierarchy associated with and including this port. Note that generation of system notification on a PCI Express/ESI fatal error is orthogonal to generation of an MSI interrupt for the same error. Both a system error and MSI can be generated on a fatal error or software can chose one of the two. Refer to *PCI Express Base Specification, Revision 1.1 and post 1.1 Erratas and EC*'s* for details of how this bit is used in conjunction with other error control bits to generate core logic notification of error events in a PCI Express/ESI port.
1	RW	0h	**System Error on Non-Fatal Error Enable** This field enables notifying the internal core error logic of occurrence of an uncorrectable non-fatal error at the port or below its hierarchy. The internal core error logic of IOH then decides if/how to escalate the error further (pins/message etc). Refer to Chapter 16 for details of how/which system notification is generated for a PCI Express/ESI non-fatal error. 1: indicates that a internal core error logic notification should be generated if a non-fatal error (ERR_NONFATAL) is reported by any of the devices in the hierarchy associated with and including this port. 0: No internal core error logic notification should be generated on a non-fatal error (ERR_NONFATAL) reported by any of the devices in the hierarchy associated with and including this port. Note that generation of system notification on a PCI Express/ESI non-fatal error is orthogonal to generation of an MSI interrupt for the same error. Both a system error and MSI can be generated on a non-fatal error or software can chose one of the two. Refer to *PCI Express Base Specification, Revision 1.1 and post 1.1 Erratas and EC*'s* for details of how this bit is used in conjunction with other error control bits to generate core logic notification of error events in a PCI Express/ESI port.

Register: ROOTCON Device: 0-10 Function: 0 Offset: ACh			
Bit	**Attr**	**Default**	**Description**
0	RW	0h	**System Error on Correctable Error Enable** This field controls notifying the internal core error logic of the occurrence of a correctable error in the device or below its hierarchy. The internal core error logic of IOH then decides if/how to escalate the error further (pins/ message etc). Refer to Chapter 16 for details of how/which system notification is generated for a PCI Express correctable error. 1: indicates that an internal core error logic notification should be generated if a correctable error (ERR_COR) is reported by any of the devices in the hierarchy associated with and including this port. 0: No internal core error logic notification should be generated on a correctable error (ERR_COR) reported by any of the devices in the hierarchy associated with and including this port. Note that generation of system notification on a PCI Express correctable error is orthogonal to generation of an MSI interrupt for the same error. Both a system error and MSI can be generated on a correctable error or software can chose one of the two. Refer to *PCI Express Base Specification, Revision 1.1 and post 1.1 Erratas and EC*'s* for details of how this bit is used in conjunction with other error control bits to generate core logic notification of error events in a PCI Express/ESI port.

21.12.4.26 ROOTCAP: PCI Express Root Capabilities Register

The PCI Express Root Status register specifies parameters specific to the root complex port.

Register: ROOTCAP Device: 0-8; N/A for others Function: 0 Offset: AEh			
Bit	**Attr**	**Default**	**Description**
15:1	RV	0h	*Reserved.*
0	RO	1	**CRS Software Visibility** This bit, when set, indicates that the Root Port is capable of returning Configuration Request Retry Status (CRS) Completion Status to software. IOH supports this capability.

21.12.4.27 ROOTSTS: PCI Express Root Status Register

The PCI Express Root Status register specifies parameters specific to the root complex port.

Register: ROOTSTS Device: 1-10 Function: 0 Offset: B0h			
Bit	**Attr**	**Default**	**Description**
31:18	RV	0h	*Reserved.*
17	RO	0h	**PME Pending** This field indicates that another PME is pending when the PME Status bit is set. When the PME Status bit is cleared by software; the pending PME is delivered by hardware by setting the PME Status bit again and updating the Requestor ID appropriately. The PME pending bit is cleared by hardware if no more PMEs are pending.

Register: ROOTSTS Device: 1-10 Function: 0 Offset: B0h			
Bit	**Attr**	**Default**	**Description**
16	RW1C	0h	**PME Status** This field indicates a PM_PME message (either from the link or internally from within that root port) was received at the port. 1: PME was asserted by a requester as indicated by the PMEREQID field This bit is cleared by software by writing a '1'. Note that the root port itself could be the source of a PME event when a hotplug event is observed when the port is in D3hot state.
15:0	RO	0000h	**PME Requester ID** This field indicates the PCI requester ID of the last PME requestor. If the root port itself was the source of the (virtual) PME message, then a RequesterID of IOHBUSNO:DevNo:0 is logged in this field.

21.12.4.28 DEVCAP2: PCI Express Device Capabilities Register 2

Register: DEVCAP2 Device: 0-10 Function: 0 Offset: B4h			
Bit	**Attr**	**Default**	**Description**
31:6	RV	0h	Reserved
5	RO	1	Alternative RID Interpretation (ARI) Capable: This bit is set to 1b indicating Root Port supports this capability
4	RO	1	Completion Timeout Disable Supported: IOH supports disabling Completion Timeout
3:0	RO	1110b	**Completion Time-Out Values Supported** – This field indicates device support for the optional Completion Time-Out programmability mechanism. This mechanism allows system software to modify the Completion Time-Out range. Bits are one-hot encoded and set according to the table below to show time-out value ranges supported. A device that supports the optional capability of Completion Time-Out Programmability must set at least two bits. Ranges are defined: Range A: 50us to 10ms Range B: 10ms to 250ms Range C: 250ms to 4s Range D: 4s to 64s Bits ares set according to table below to show timeout value ranges supported. 0000b: Completions Timeout programming not supported -- values is fixed by implementation in the range 50us to 50ms. 0001b: Range A 0010b: Range B 0011b: Range A & B 0110b: Range B & C 0111b: Range A, B, & C 1110b: Range B, C and D 1111b: Range A, B, C & D All other values are reserved. IOH supports time-out values from to 2ms-6s. The values specified above are required by PCIe Specification 2.1

21.12.4.29 DEVCTRL2: PCI Express Device Control Register 2

Register: DEVCTRL2 Device: 0-10 Function: 0 Offset: B8h			
Bit	**Attr**	**Default**	**Description**
15:6	RV	0h	Reserved
5	RO	0	ARI Enable - this bit is hardwired to 0.
4	RW	0	**Completion Time-Out Disable** – When set to 1b, this bit disables the Completion Time-Out mechanism for all NP tx that IOH issues on the PCIe/ESI link.When 0b, completion time-out is enabled. Software can change this field while there is active traffic in the root port.
3:0	RW	0000b	**Completion Time-Out Value** on NP Tx that IOH issues on PCIe/ESI – In Devices that support Completion Time-Out programmability, this field allows system software to modify the Completion Time-Out range. The following encodings and corresponding time-out ranges are defined: 0000b = 2 ms 0001b = Reserved (IOH aliases to 0000b) 0010b = Reserved (IOH aliases to 0000b) 0101b = 4 ms 0110b = 10 ms 1001b = 40 ms 1010b = 210 ms 1101b = 800 ms 1110b = 2 s to 6.5 s Note: These values can deviate +/- 10% When OS selects the highest range, Section 21.13.8, "CTOCTRL: Completion Time-Out Control Register" on page 553 further controls the time-out value within that range. For all other ranges selected by OS, the time-out value within that range is fixed in IOH hardware. Software can change this field while there is active traffic in the root port.

21.12.4.30 LNKCON2: PCI Express Link Control Register 2

Register: LNKCON2 Device: 1-10 Function: 0 Offset: C0h			
Bit	**Attr**	**Default**	**Description**
15:13	RV	0	Reserved
12	RWS	0	**Compliance De-emphasis** – This bit sets the de-emphasis level in Polling.Compliance state if the entry occurred due to the Enter Compliance bit being 1b. Encodings: 1b -3.5 dB 0b -6 dB
11	RWS	0	**Compliance SOS** - When set to 1b, the LTSSM is required to send SKP Ordered Sets periodically in between the (modified) compliance patterns.
10	RWS	0	**Enter Modified Compliance** - When this bit is set to 1b, the device transmits Modified Compliance Pattern if the LTSSM enters Polling.Compliance substate.
9:7	RWS	0	**Transmit Margin** - This field controls the value of the nondeemphasized voltage level at the Transmitter pins.

Register: LNKCON2 Device: 1-10 Function: 0 Offset: C0h			
Bit	**Attr**	**Default**	**Description**
6	RWO	0	**Selectable De-emphasis** - When the Link is operating at 5.0 GT/s speed, this bit selects the level of de-emphasis for an Upstream component. Encodings: 1b -3.5 dB 0b -6 dB When the Link is operating at 2.5 GT/s speed, the setting of this bit has no effect.
5	RW	0	**Hardware Autonomous Speed Disable** - IOH does not change link speed autonomously other than for reliability reasons.
4	RWS	0	**Enter Compliance** - Software is permitted to force a link to enter Compliance mode at the speed indicated in the Target Link Speed field by setting this bit to 1b in both components on a link and then initiating a hot reset on the link.
3:0	RWS	See Description	**Target Link Speed** - This field sets an upper limit on link operational speed by restricting the values advertised by the upstream component in its training sequences. Defined encodings are: 0001b2.5 Gb/s Target Link Speed 0010b 5 Gb/s Target Link Speed All other encodings are reserved. If a value is written to this field that does not correspond to a speed included in the Supported Link Speeds field, IOH will default to Gen1 speed. This field is also used to set the target compliance mode speed when software is using the Enter Compliance bit to force a link into compliance mode.

21.12.4.31 PMCAP: Power Management Capabilities Register

The PM Capabilities Register defines the capability ID, next pointer and other power management related support. The following PM registers /capabilities are added for software compliance.

Register: PMCAP Device: 1-10 Function: 0 Offset: E0h			
Bit	**Attr**	**Default**	**Description**
31:27	RO	11001	PME Support Bits 31, 30 and 27 must be set to '1' for PCI-PCI bridge structures representing ports on root complexes.
26	RO	0	D2 Support IOH does not support power management state D2.
25	RO	0	D1 Support IOH does not support power management state D1.
24:22	RO	0h	AUX Current
21	RO	0	Device Specific Initialization
20	RV	0	*Reserved.*
19	RO	0	PME Clock This field is hardwired to 0h as it does not apply to PCI Express.

Register: PMCAP Device: 1-10 Function: 0 Offset: E0h			
Bit	**Attr**	**Default**	**Description**
18:16	RWO	011	Version This field is set to 3h (PM 1.2 compliant) as version number. The bit is RWO to make the version 2h incase legacy OS'es have any issues.
15:8	RO	00h	Next Capability Pointer This is the last capability in the chain and hence set to 0.
7:0	RO	01h	Capability ID Provides the PM capability ID assigned by PCI-SIG.

21.12.4.32 PMCSR: Power Management Control and Status Register

This register provides status and control information for PM events in the PCI Express port of the IOH.

Register: PMCSR Device: 1-10 Function: 0 Offset: E4h			
Bit	**Attr**	**Default**	**Description**
31:24	RO	00h	Data Not relevant for IOH
23	RO	0h	Bus Power/Clock Control Enable This field is hardwired to 0h as it does not apply to PCI Express.
22	RO	0h	B2/B3 Support This field is hardwired to 0h as it does not apply to PCI Express.
21:16	RV	0h	*Reserved.*
15	RW1CST	0h	PME Status Applies only to root ports This PME Status is a sticky bit. This bit is set, independent of the PMEEN bit defined below, on an enabled PCI Express hotplug event provided the root port was in D3hot state. Software clears this bit by writing a '1' when it has been completed. Refer to *PCI Express Base Specification, Revision 1.1 and post 1.1 Erratas and EC*'s* for further details on wake event generation at a root port.
14:13	RO	0h	**Data Scale** Not relevant for IOH
12:9	RO	0h	**Data Select** Not relevant for IOH
8	RWS	0h	**PME Enable** Applies only to root ports. This field is a sticky bit and when set, enables PMEs generated internally on a PCI Express hotplug event to set the appropriate bits in the ROOTSTS register (which can then trigger an MSI or cause a _PMEGPE event).
7:4	RV	0h	*Reserved.*
3	RWO	1	**No Soft Reset** Has no effect on functionality.
2	RV	0h	*Reserved.*

Register: PMCSR Device: 1-10 Function: 0 Offset: E4h			
Bit	**Attr**	**Default**	**Description**
1:0	RW	0h	**Power State** This 2-bit field is used to determine the current power state of the function and to set a new power state as well. 00: D0 01: D1 (not supported by IOH) 10: D2 (not supported by IOH) 11: D3_hot Software should only write values supported in PMCAP (00 & 11). If Software tries to write 01 or 10 to this field, the power state does not change from the existing power state (which is either D0 or D3hot) and nor do these bits1:0 change value. All devices will respond to only Type 0 configuration transactions when in D3hot state (root port will not forward Type 1 accesses to the downstream link) and will not respond to memory/IO transactions (i.e. D3hot state is equivalent to MSE/IOSE bits being clear) as target and will not generate any memory/IO/configuration transactions as initiator on the primary bus (messages are still allowed to pass through). When the rootport is in D3hot state it will block accesses to IOAPIC memory range. That is when rootport is in D3hot OS will not be able to access downstream IOAPIC. Only functionality this field is connected to is in dropping outbound transactions if this power state field indicates D3_hot. This option is through CSR PXPCTRL & by default disabled for D3_hot. If drop option is set for D3-hot, if in D3_hot then next write cannot be anything other than D0.

21.12.5 PCI Express Enhanced Configuration Space

21.12.5.1 ERRCAPHDR: PCI Express Enhanced Capability Header

This register identifies the capability structure and points to the next structure.

Register: ERRCAPHDR Device: 0-10 Function: 0 Offset: 100h			
Bit	**Attr**	**Default**	**Description**
31:20	RO	150h	**Next Capability Offset** This field points to the next Capability in extended configuration space.
19:16	RO	1h	**Capability Version** Set to 1h for this version of the PCI Express logic
15:0	RO	0001h	**PCI Express Extended CAP_ID** Assigned for advanced error reporting

21.12.5.2 UNCERRSTS: Uncorrectable Error Status

This register identifies uncorrectable errors detected for PCI Express/ESI port.

Register: UNCERRSTS Device: 0-10 Function: 0 Offset: 104h			
Bit	**Attr**	**Default**	**Description**
31:22	RV	0h	*Reserved*
21	RW1CS	0	ACS Violation Status
20	RW1CS	0	**Received an Unsupported Request**
19	RV	0	*Reserved*
18	RW1CS	0	**Malformed TLP Status**
17	RW1CS	0	**Receiver Buffer Overflow Status**
16	RW1CS	0	**Unexpected Completion Status**
15	RW1CS	0	**Completer Abort Status**
14	RW1CS	0	**Completion Time-out Status**
13	RW1CS	0	**Flow Control Protocol Error Status**
12	RW1CS	0	**Poisoned TLP Status**
11:6	RV	0h	Reserved
5	RW1CS	0	Surprise Down Error Status ***Note:*** For non hot-plug removals, this will be logged only when SLTCON[10] is set to 0.
4	RW1CS	0	**Data Link Protocol Error Status**
3:0	RV	0h	Reserved

21.12.5.3 UNCERRMSK: Uncorrectable Error Mask

This register masks uncorrectable errors from being signaled.

Register: UNCERRMSK
Device: 0-10
Function: 0
Offset: 108h

Bit	Attr	Default	Description
31:21	RV	0	Reserved
21	RWS	0	**ACS Violation Mask**
20	RWS	0	**Unsupported Request Error Mask**
19	RV	0	Reserved
18	RWS	0	**Malformed TLP Mask**
17	RWS	0	**Receiver Buffer Overflow Mask**
16	RWS	0	**Unexpected Completion Mask**
15	RWS	0	**Completer Abort Mask**
14	RWS	0	**Completion Time-out Mask**
13	RWS	0	**Flow Control Protocol Error Mask**
12	RWS	0	**Poisoned TLP Mask**
11:6	RV	0	Reserved
5	RWS	0	**Surprise Down Error Mask**
4	RWS	0	**Data Link Layer Protocol Error Mask**
3:0	RV	0	Reserved

21.12.5.4 UNCERRSEV: Uncorrectable Error Severity

This register indicates the severity of the uncorrectable errors.

Register: UNCERRSEV
Device: 0-10
Function: 0
Offset: 10Ch

Bit	Attr	Default	Description
31:22	RV	0	*Reserved*
21	RWS	0	**ACS Violation Severity**
20	RWST	0	**Unsupported Request Error Severity**
19	RV	0	*Reserved*
18	RWS	1	**Malformed TLP Severity**
17	RWS	1	**Receiver Buffer Overflow Severity**
16	RWS	0	**Unexpected Completion Severity**
15	RWS	0	**Completer Abort Severity**
14	RWS	0	**Completion Time-out Severity**
13	RWS	1	**Flow Control Protocol Error Severity**
12	RWS	0	**Poisoned TLP Severity**
11:6	RV	0	*Reserved*
5	RWS	1	**Surprise Down Error Severity**

Register: UNCERRSEV Device: 0-10 Function: 0 Offset: 10Ch			
Bit	**Attr**	**Default**	**Description**
4	RWS	1	**Data Link Protocol Error Severity**
3:0	RV	0	Reserved

21.12.5.5 CORERRSTS: Correctable Error Status

This register identifies the status of the correctable errors that have been detected by the Express port.

Register: CORERRSTS Device: 0-10 Function: 0 Offset: 110h			
Bit	**Attr**	**Default**	**Description**
31:14	RV	0h	Reserved
13	RW1CS	0	**Advisory Non-fatal Error Status** Note: inbound memory writes within address range of 2^51 to 2^52-1 are considered Advisory non-fatal instead of non-fatal. If severity of UR is set to Non-Fatal and if Advisory reporting is enabled then if a 64-bit Memory write with address in range of 0x8_0000_0000_0000 to 0xF_FFFF_FFFF_FFFF is encountered, then it is logged as Advisory non-Fatal error. i.e. CORERRSTS[13] is set, instead of just non-fatal. Memory writes above 2^52 (upto 2^63) are correctly logged as non-Fatal under similar conditions. No issues if UR severity is set to Fatal or Advisory reporting is not enabled. No issues for Memory reads in the same address range.
12	RW1CS	0	**Replay Timer Time-out Status**
11:9	RV	0	*Reserved*
8	RW1CS	0	**Replay_Num Rollover Status**
7	RW1CS	0	**Bad DLLP Status**
6	RW1CS	0	**Bad TLP Status**
5:1	RV	0	Reserved
0	RW1CS	0	**Receiver Error Status**

21.12.5.6 CORERRMSK: Correctable Error Mask

This register masks correctable errors from being not signalled.

Register: CORERRMSK Device: 0-10 Function: 0 Offset: 114h			
Bit	**Attr**	**Default**	**Description**
31:14	RV	0h	*Reserved*
13	RWS	1h	**Advisory Non-fatal Error Mask**
12	RWS	0h	**Replay Timer Time-out Mask**
11:9	RV	0h	*Reserved*
8	RWS	0h	**Replay_Num Rollover Mask**

Register: CORERRMSK Device: 0-10 Function: 0 Offset: 114h			
Bit	**Attr**	**Default**	**Description**
7	RWS	0h	**Bad DLLP Mask**
6	RWS	0	**Bad TLP Mask**
5:1	RV	0	*Reserved*
0	RWS	0	**Receiver Error Mask**

21.12.5.7 ERRCAP: Advanced Error Capabilities and Control Register

Register: ERRCAP Device: 0-10 Function: 0 Offset: 118h			
Bit	**Attr**	**Default**	**Description**
31:9	RV	0	Reserved
8	RO	0	**ECRC Check Enable: N/A to IOH**
7	RO	0	**ECRC Check Capable: N/A to IOH**
6	RO	0	**ECRC Generation Enable: N/A to IOH**
5	RO	0	**ECRC Generation Capable: N/A to IOH**
4:0	ROS	0h	**First error pointer** The First Error Pointer is a read-only register that identifies the bit position of the first unmasked error reported in the Uncorrectable Error register. In case of two errors happening at the same time, fatal error gets precedence over non-fatal, in terms of being reported as first error. This field is rearmed to capture new errors when the status bit indicated by this field is cleared by software.

21.12.5.8 HDRLOG: Header Log

This register contains the header log when the first error occurs. Headers of the subsequent errors are not logged.

Register: HDRLOG Device: 0-10 Function: 0 Offset: 11Ch			
Bit	**Attr**	**Default**	**Description**
127:0	ROS	0h	**Header of TLP associated with error**

21.12.5.9 RPERRCMD: Root Port Error Command Register

This register controls behavior upon detection of errors. Refer to Section 16.6.3.5, "PCI Express Error Reporting Specifics" for details of MSI generation for PCIe error events.

Register: RPERRCMD
Device: 0-10
Function: 0
Offset: 12Ch

Bit	Attr	Default	Description
31:3	RV	0	*Reserved*
2	RW	0	**FATAL Error Reporting Enable** Enable MSI interrupt on fatal errors when set.
1	RW	0	**Non-FATAL Error Reporting Enable** Enable interrupt on a non-fatal error when set.
0	RW	0	**Correctable Error Reporting Enabl**e Enable interrupt on correctable error when it set.

21.12.5.10 RPERRSTS: Root Error Status Register

The Root Error Status register reports status of error Messages (ERR_COR), ERR_NONFATAL, and ERR_FATAL) received by the Root Complex in IOH, and errors detected by the Root Port itself (which are treated conceptually as if the Root Port had sent an error Message to itself). The ERR_NONFATAL and ERR_FATAL Messages are grouped together as uncorrectable. Each correctable and uncorrectable (non-fatal and fatal) error source has a first error bit and a next error bit associated with it respectively. When an error is received by a Root Complex, the respective first error bit is set and the Requestor ID is logged in the Error Source Identification register. A set individual error status bit indicates that a particular error category occurred; software may clear an error status by writing a 1 to the respective bit. If software does not clear the first reported error before another error Message is received of the same category (correctable or uncorrectable), the corresponding next error status bit will be set but the Requestor ID of the subsequent error Message is discarded. The next error status bits may be cleared by software by writing a 1 to the respective bit as well.

Register: RPERRSTS
Device: 0-10
Function: 0
Offset: 130h

Bit	Attr	Default	Description
31:27	RO	0h	**Advanced Error Interrupt Message Number** Advanced Error Interrupt Message Number offset between base message data an the MSI message if assigned more than one message number. IOH hardware automatically updates this register to 0x1h if the number of messages allocated to the root port is 2. See bit 6:4 for details of the number of messages allocated to a root port.
26:7	RV	0	Reserved
6	RW1CS	0	Fatal Error Messages Received Set when one or more Fatal Uncorrectable error Messages have been received.
5	RW1CS	0	Non-Fatal Error Messages Received Set when one or more Non-Fatal Uncorrectable error Messages have been received.

Register: RPERRSTS Device: 0-10 Function: 0 Offset: 130h			
Bit	**Attr**	**Default**	**Description**
4	RW1CS	0	First Uncorrectable Fatal Set when bit 2 is set (from being clear) and the message causing bit 2 to be set is an ERR_FATAL message.
3	RW1CS	0	Multiple Error Fatal/Nonfatal Received Set when either a fatal or a non-fatal error message is received and Error Fatal/Nonfatal Received is already set, that is, log from the 2nd Fatal or No fatal error message onwards
2	RW1CS	0	Error Fatal/Nonfatal Received Set when either a fatal or a non-fatal error message is received and this bit is already not set, that is, log the first error message. Note that when this bit is set bit 3 could be either set or clear.
1	RW1CS	0	Multiple Correctable Error Received Set when either a correctable error message is received and Correctable Error Received bit is already set, that is, log from the 2nd Correctable error message onwards
0	RW1CS	0	Correctable Error Received Set when a correctable error message is received and this bit is already not set, that is, log the first error message

21.12.5.11 ERRSID: Error Source Identification Register

While internally generated error messages in the IOH will have their Requester ID logged correctly in this register, incoming ERR_* messages' Requester ID will not be.

Register: ERRSID Device: 0-10 Function: 0 Offset: 134h			
Bit	**Attr**	**Default**	**Description**
31:16	ROS	0h	**Fatal Non Fatal Error Source ID** Requestor ID of the source when a Fatal or Non Fatal error message is received and the Error Fatal/Nonfatal Received bit is not already set, that is, log ID of the first Fatal or Non Fatal error message. Note that when the root port itself is the cause of the received message (virtual message), then a Source ID of IOHBUSNO:DevNo:0 is logged into this register.
15:0	ROS	0h	**Correctable Error Source ID** Requestor ID of the source when a correctable error message is received and the Correctable Error Received bit is not already set, that is, log ID of the first correctable error message. Note that when the root port itself is the cause of the received message (virtual message), then a Source ID of IOHBUSNO:DevNo:0 is logged into this register.

21.12.5.12 SSMSK: Stop and Scream Mask Register

This register masks uncorrectable errors from being signaled as Stop and Scream events. Whenever the uncorrectable status bit is set and stop and scream mask is not set for that bit, it will trigger a Stop and Scream event.

Register: SSMSK
Device: 0-10
Function: 0
Offset: 138

Bit	Attr	Default	Description
31:22	RV	0	Reserved
21	RWS	0	**ACS Violation Mask**
20	RWS	0	Unsupported Request Error Mask
19	RV	0	Reserved
18	RWS	0	Malformed TLP Mask
17	RWS	0	Receiver Buffer Overflow Mask
16	RWS	0	Unexpected Completion Mask
15	RWS	0	Completer Abort Mask
14	RWS	0	Completion Time-out Mask
13	RWS	0	Flow Control Protocol Error Mask
12	RWS	0	Poisoned TLP Mask
11:6	RV	0	Reserved
5	RWS	0	Surprise Down Error Mask
4	RWS	0	Data Link Layer Protocol Error Mask
3:0	RV	0	Reserved

21.12.5.13 APICBASE: APIC Base Register

Register: APICBASE
Device: 0-10
Function: 0
Offset: 140h

Bit	Attr	Default	Description
15:12	RV	0h	Reserved
11:1	RW	0h	**Bits 19:9 of the APIC base** Bits 31:20 are assumed to be 0xFECh. Bits 8:0 are a don't care for address decode. Address decoding to the APIC range is done as APIC_BASE[31:8] <= A[31:8] <= APIC_LIMIT[31:8].
0	RW	0h	**APIC range enable:** enables the decode of the APIC window

21.12.5.14 APICLIMIT: APIC Limit Register

Register: APICLIMIT
Device: 0-10
Function: 0
Offset: 142h

Bit	Attr	Default	Description
15:12	RV	0h	Reserved
11:1	RW	0h	Bits 19:9 of the APIC limit Bits 31:20 are assumed to be 0xFECh. Bits 8:0 are a don't care for address decode. Address decoding to the APIC range is done as APIC_BASE[31:8] <= A[31:8] <= APIC_LIMIT[31:8].
0	RV	0h	Reserved

21.12.5.15 ACSCAPHDR: Access Control Services Extended Capability Header

This register identifies the Access Control Services (ACS) capability structure and points to the next structure.

Register: ACSCAPHDR
Device: 0-10
Function: 0
Offset: 150h

Bit	Attr	Default	Description
31:20	RO	Dev:def 0: 160h 1: 160h 3: 160h 7: 160h else: 00h	**Next Capability Offset** This field points to the next Capability configuration space. This is set to 160h for Dev# 0, 1, 3 and 7. For other PCI Express devices this is set to 00h indicating that this is the last capability.
19:16	RO	1h	**Capability Version** Set to 1h for this version of the PCI Express logic
15:0	RO	000Dh	PCI Express Extended CAP_ID Assigned for Access Control Cervices capabilities

21.12.5.16 ACSCAP: Access Control Services Capability Register

This register identifies the Access Control Services (ACS) capabilities.

Register: ACSCAP
Device: 0-10
Function: 0
Offset: 154h

Bit	Attr	Default	Description
15:8	RO	00h	Egress Control Vector Size Indicates the number of bits in the Egress Control Vector. This is set to 00h as ACS P2P Egress Control (E) bit in this register is 0b.
7	RV	0	Reserved.
6	RO	0	ACS Direct Translated P2P (T) Indicates that the component does not implement ACS Direct Translated P2P.
5	RO	0	ACS P2P Egress Control (E) Indicates that the component does not implement ACS P2P Egress Control.
4	RO	1	ACS Upstream Forwarding (U) Indicates that the component implements ACS Upstream Forwarding.

Register: ACSCAP Device: 0-10 Function: 0 Offset: 154h			
Bit	**Attr**	**Default**	**Description**
3	RO	1	ACS P2P Completion Redirect (C) Indicates that the component implements ACS P2P Completion Redirect.
2	RO	1	ACS P2P Request Redirect (R) Indicates that the component implements ACS P2P Request Redirect.
1	RO	1	ACS Translation Blocking (B) Indicates that the component implements ACS Translation Blocking.
0	RO	1	ACS Source Validation (V) Indicates that the component implements ACS Source Validation.

21.12.5.17 ACSCTRL: Access Control Services Control Register

This register identifies the Access Control Services (ACS) control bits.

Register: ACSCTRL Device: 0-10 Function: 0 Offset: 156h			
Bit	**Attr**	**Default**	**Description**
15:7	RV	0	Reserved.
6	RO	0	ACS Direct Translated P2P Enable (T) This is hardwired to 0b as the component does not implement ACS Direct Translated P2P.
5	RW	0	ACS P2P Egress Control Enable (E) This is hardwired to 0b as the component does not implement ACS P2P Egress Control.
4	RW	0	ACS Upstream Forwarding Enable (U) When set, the component forwards upstream any Request or Completion TLPs it receives that were redirected upstream by a component lower in the hierarchy. Note that the U bit only applies to upstream TLPs arriving at a Downstream Port, and whose normal routing targets the same Downstream Port.
3	RW	0	ACS P2P Completion Redirect Enable (C) Determines when the component redirects peer-to-peer Completions upstream; applicable only to Read Completions whose Relaxed Ordering Attribute is clear.
2	RW	0	ACS P2P Request Redirect Enable (R) This bit determines when the component redirects peer-to-peer Requests upstream.
1	RW	0	ACS Translation Blocking Enable (B) When set, the component blocks all upstream Memory Requests whose Address Translation (AT) field is not set to the default value.
0	RW	0	ACS Source Validation Enable (V) When set, the component validates the Bus Number from the Requester ID of upstream Requests against the secondary / subordinate Bus Numbers.

21.12.5.18 PERFCTRLSTS: Performance Control and Status Register

Register: PERFCTRLSTS
Device: 0-10
Function: 0
Offset: 180h

Bit	Attr	Default	Description
63:41	RV	0	Reserved
40	RW	0	DCA Requester ID override: When this CSR bit is set, it indicates that there is no match for DCA Req ID authentication and eventually disables DCA all together so no prefetch hints will be sent. This is independent of how the tag field is programmed.
39:21	RV	0	Reserved
20:16	RW	0x18	Number of outstanding RFOs/pre-allocated non-posted requests for PCI Express Gen1 This register controls the number of outstanding inbound non-posted requests - i/o, config, memory - that a Gen1 PCI Express downstream port can have, for all non-posted requests (peer-to-peer or to main-memory) it pre-allocates buffer space for. This register provides the value for the port when it is operating in Gen1 mode and for a link width of x4. The value of this parameter for the port when operating in Gen1 x8 width is obtained by multiplying this register by 2 and 4 respectively. Software programs this register based on the read/RFO latency to main memory. This register also specifies the number of RFOs that can be kept outstanding on Intel® QPI from a given port. The link speed of the port can change during a PCI Express hotplug event and the port must use this register or the Gen2 register (see bits 13:8) based on the link speed. A value of 1 indicates one outstanding pre-allocated request, 2 indicates 2 outstanding pre-allocated requests and so on. Software can change this register at runtime (in preparation for Intel® QPI quiesce) and hardware should be tolerant of that.
15:14	RV	0	Reserved
13:8	RW	0x30	Number of outstanding pre-allocated non-posted requests for PCI Express Gen2 This register controls the number of outstanding inbound non-posted requests - i/o, config, memory - (maximum length of these requests is a CL) that a Gen2 PCI Express downstream port can have, for all non-posted requests (peer-to-peer or to main-memory) it pre-allocates buffer space for. This register provides the value for the port when it is operating in Gen2 mode and for a link width of x4. The value of this parameter for the port when operating in Gen2 width is obtained by multiplying this register by 2 and 4 respectively. Software programs this register based on the read/RFO latency to main memory. This register also specifies the number of RFOs that can be kept outstanding on Intel® QPI for a given port. The link speed of the port can change during a PCI Express hotplug event and the port must use this register or the Gen1 register (see bits 20:16) based on the link speed. A value of 1 indicates one outstanding pre-allocated request, 2 indicates 2 outstanding pre-allocated requests and so on. Software can change this register at runtime (in preparation for Intel® QPI quiesce) and hardware should be tolerant of that.
7:4	RV	0	Reserved
3	RW	0	Enable No-Snoop Optimization on Writes When set, memory reads with NS=1 will not be snooped on Intel QuickPath Interconnect.
2	RW	0h	**Enable No-Snoop Optimization on Reads** When set, memory reads with NS=1 will not be snooped on Intel QuickPath Interconnect.
1	RV	0h	Reserved

Register: PERFCTRLSTS Device: 0-10 Function: 0 Offset: 180h			
Bit	**Attr**	**Default**	**Description**
0	RV	1	Reserved

21.12.5.19 MISCCTRLSTS: Misc. Control and Status Register (Dev #0, ESI Only)

Register: MISCCTRLSTS Device: 0 (ESI Only) Function: 0 Offset: 188h			
Bit	**Attr**	**Default**	**Description**
63:49	RV	0	Reserved
48	RW1C	0	Received PME_TO_ACK: Indicates that IOH received a PME turn off ack packet or it timed out waiting for the packet
47:37	RV	0	Reserved
36	RWS	0	**Form-Factor** Indicates what form-factor a particular root port controls 0 - CEM/Cable 1 - SIOM This bit is used to interpret bit 6 in the VPP serial stream for the port as either MRL# (CEM/Cable) input or EMLSTS# (SIOM) input. In case of cable form factor.
35	RWST	0	**Override System Error on PCIe Fatal Error Enable:** When set, fatal errors on PCI Express (that have been successfully propagated to the primary interface of the port) are sent to the IOH core error logic (for further escalation) regardless of the setting of the equivalent bit in the ROOTCTRL register. When clear, the fatal errors are only propagated to the IOH core error logic if the equivalent bit in ROOTCTRL register is set.
34	RWST	0	**Override System Error on PCIe Non-fatal Error Enable:** When set, non-fatal errors on PCI Express (that have been successfully propagated to the primary interface of the port) are sent to the IOH core error logic (for further escalation) regardless of the setting of the equivalent bit in the ROOTCTRL register. When clear, the non-fatal errors are only propagated to the IOH core error logic if the equivalent bit in ROOTCTRL register is set.
33	RWST	0	**Override System Error on PCIe Correctable Error Enable:** When set, correctable errors on PCI Express (that have been successfully propagated to the primary interface of the port) are sent to the IOH core error logic (for further escalation) regardless of the setting of the equivalent bit in the ROOTCTRL register. When clear, the correctable errors are only propagated to the IOH core error logic if the equivalent bit in ROOTCTRL register is set.
32	RW	0	**ACPI PME Interrupt Enable:** When set, Assert/Deassert_PMEGPE messages are enabled to be generated when ACPI mode is enabled for handling PME messages from PCI Express. When this bit is cleared (from a 1), a Deassert_PMEGPE message is scheduled on behalf of the root port if an Assert_PMEGPE message was sent earlier from the root port.
31	RWST	0	**Disable L0s on transmitter:** When set, IOH never puts its tx in L0s state, even if OS enables it via the Link Control register.
30	RWO	0	**Inbound I/O disable:** When set, all inbound I/O are aborted and treated as UR.
29	RW	1	**cfg_to_en** 1: Disables 0: Enables config timeouts, independently of other timeouts.

Register: MISCCTRLSTS Device: 0 (ESI Only) Function: 0 Offset: 188h			
Bit	**Attr**	**Default**	**Description**
28	RWST	0	Disables Timeouts Completely when set.
27	RWS	0	System Interrupt Only on Link BW/Management Status This bit, when set, will disable generating MSI interrupt on link bandwidth (speed and/or width) and management changes, even if MSI is enabled, that is, will disable generating MSI when LNKSTS bits 15 and 14 are set. Whether or not this condition results in a system event like SMI/PMI/CPEI is dependent is masked or not in the XPCORERRMSK register.
26	RW	0	**Disable EOI broadcast to this PCIe link:** When set, EOI message will not be broadcast down this PCIe link. When clear, the port is a valid target for EOI broadcast.
25:22	RV	0	Reserved
21	RV	1	Reserved
20:13	RV	0	Reserved
12:11	RV	1	Reserved
10:9	RV	0	Reserved
8:7	RW	0	PME_TO_ACK Timeout Control:
6	RWST	0	**Enable timeout for receiving PME_TO_ACK:** When set, IOH enables the timeout to receiving the PME_TO_ACK
5	RW	0	Send PME_TURN_OFF Message When this bit is written with a 1b, IOH sends a PME_TURN_OFF message to the PCIe link. Hardware clears this bit when the message has been sent on the link.
4	RW	0	Enable System Error only for AER When this bit is set, the PCI Express errors do not trigger an MSI interrupt, regardless of the whether MSI is enabled or not. Whether or not PCI Express errors result in a system event like NMI/SMI/PMI/CPEI is dependent on whether the appropriate system error enable bits are set or not. See Section 16.6.3, "PCI Express Error Reporting Mechanism" on page 229 for details of how this bit interacts with other control bits in signalling errors to the IOH global error reporting logic. When this bit is clear, PCI Express errors are reported via MSI and/or NMI/SMI/MCA/CPEI. When this bit is clear and if MSI enable bit in the Section 21.12.5.19, "MISCCTRLSTS: Misc. Control and Status Register (Dev #0, ESI Only)" on page 535 is set, then an MSI interrupt is generated for PCI Express errors. When this bit is clear, and 'System Error on Fatal Error Enable' bit in Section 21.12.4.25, "ROOTCON: PCI Express Root Control Register" on page 518 is set, then NMI/SMI/MCA is (also) generated for a PCI Express fatal error. Similar behavior for non-fatal and corrected errors.

Register: MISCCTRLSTS Device: 0 (ESI Only) Function: 0 Offset: 188h			
Bit	**Attr**	**Default**	**Description**
3	RW	0	Enable ACPI mode for Hotplug When this bit is set, all HP events from the PCI Express port are handled via _HPGPE messages to the ICH and no MSI messages are ever generated for HP events (regardless of whether MSI is enabled at the root port or not) at the root port. When this bit is clear, _HPGPE message generation on behalf of root port HP events is disabled and OS can chose to generate MSI interrupt for HP events, by setting the MSI enable bit in root ports. This bit does not apply to the ESI ports. Clearing this bit (from being 1) schedules a Deassert_HPGPE event on behalf of the root port, provided there was any previous Assert_HPGPE message that was sent without an associated Deassert message.
2	RW	0	Enable ACPI mode for PM When this bit is set, all PM events at the PCI Express port are handled via _PMEGPE messages to the ICH, and no MSI interrupts are ever generated for PM events at the root port (regardless of whether MSI is enabled at the root port or not). When clear, _PMEGPE message generation for PM events is disabled and OS can chose to generate MSI interrupts for delivering PM events by setting the MSI enable bit in root ports. This bit does not apply to the ESI ports. Clearing this bit (from being 1) schedules a Deassert_PMEGPE event on behalf of the root port, provided there was any previous Assert_PMEGPE message that was sent without an associated Deassert message.
1	RWO	0h	Inbound Configuration enable When clear all inbound configuration transactions are sent a UR response by the receiving PCI Express port. When set, inbound configs are allowed.
0	RO	1	Set Host Bridge Class code When this bit is set, the class code register indicates “Host Bridge”.

21.12.5.20 MISCCTRLSTS: Misc. Control and Status Register (Dev #0, PCIe Only)

Register: MISCCTRLSTS Device: 0 (PCIe Only) Function: 0 Offset: 188h			
Bit	**Attr**	**Default**	**Description**
63:49	RV	0	Reserved
48	RW1C	0	Received PME_TO_ACK: Indicates that IOH received a PME turn off ack packet or it timed out waiting for the packet
47:37	RV	0	Reserved
36	RWS	0	**Form-Factor** Indicates what form-factor a particular root port controls 0 - CEM/Cable 1 - SIOM This bit is used to interpret bit 6 in the VPP serial stream for the port as either MRL# (CEM/Cable) input or EMLSTS# (SIOM) input. In case of cable form factor.
35	RWST	0	**Override System Error on PCIe Fatal Error Enable:** When set, fatal errors on PCI Express (that have been successfully propagated to the primary interface of the port) are sent to the IOH core error logic (for further escalation) regardless of the setting of the equivalent bit in the ROOTCTRL register. When clear, the fatal errors are only propagated to the IOH core error logic if the equivalent bit in ROOTCTRL register is set.

Register: MISCCTRLSTS
Device: 0 (PCIe Only)
Function: 0
Offset: 188h

Bit	Attr	Default	Description
34	RWST	0	**Override System Error on PCIe Non-fatal Error Enable:** When set, non-fatal errors on PCI Express (that have been successfully propagated to the primary interface of the port) are sent to the IOH core error logic (for further escalation) regardless of the setting of the equivalent bit in the ROOTCTRL register. When clear, the non-fatal errors are only propagated to the IOH core error logic if the equivalent bit in ROOTCTRL register is set.
33	RWST	0	**Override System Error on PCIe Correctable Error Enable:** When set, correctable errors on PCI Express (that have been successfully propagated to the primary interface of the port) are sent to the IOH core error logic (for further escalation) regardless of the setting of the equivalent bit in the ROOTCTRL register. When clear, the correctable errors are only propagated to the IOH core error logic if the equivalent bit in ROOTCTRL register is set.
32	RW	0	**ACPI PME Interrupt Enable:** When set, Assert/Deassert_PMEGPE messages are enabled to be generated when ACPI mode is enabled for handling PME messages from PCI Express. When this bit is cleared (from a 1), a Deassert_PMEGPE message is scheduled on behalf of the root port if an Assert_PMEGPE message was sent earlier from the root port.
31	RWST	0	**Disable L0s on transmitter:** When set, IOH never puts its tx in L0s state, even if OS enables it via the Link Control register.
30	RWO	0	**Inbound I/O disable:** When set, all inbound I/O are aborted and treated as UR.
29	RW	1	**cfg_to_en** 1: Disables 0: Enables config timeouts, independently of other timeouts.
28	RWST	0	Disables Timeouts Completely when set.
27	RWS	0	System Interrupt Only on Link BW/Management Status This bit, when set, will disable generating MSI interrupt on link bandwidth (speed and/or width) and management changes, even if MSI is enabled, that is, will disable generating MSI when LNKSTS bits 15 and 14 are set. Whether or not this condition results in a system event like SMI/PMI/CPEI is dependent is masked or not in the XPCORERRMSK register.
26	RW	0	**Disable EOI broadcast to this PCIe link:** When set, EOI message will not be broadcast down this PCIe link. When clear, the port is a valid target for EOI broadcast.
25:22	RV	0	Reserved
21	RV	1	Reserved
20:13	RV	0	Reserved
12:11	RV	1	Reserved
10:9	RV	0	Reserved
8:7	RW	0	PME_TO_ACK Timeout Control:
6	RWST	0	**Enable timeout for receiving PME_TO_ACK:** When set, IOH enables the timeout to receiving the PME_TO_ACK
5	RW	0	Send PME_TURN_OFF Message When this bit is written with a 1b, IOH sends a PME_TURN_OFF message to the PCIe link. Hardware clears this bit when the message has been sent on the link.

Register: MISCCTRLSTS Device: 0 (PCIe Only) Function: 0 Offset: 188h			
Bit	**Attr**	**Default**	**Description**
4	RW	0	Enable System Error only for AER When this bit is set, the PCI Express errors do not trigger an MSI interrupt, regardless of the whether MSI is enabled or not. Whether or not PCI Express errors result in a system event like NMI/SMI/PMI/CPEI is dependent on whether the appropriate system error enable bits are set or not. See Section 16.6.3, "PCI Express Error Reporting Mechanism" on page 229 for details of how this bit interacts with other control bits in signalling errors to the IOH global error reporting logic. When this bit is clear, PCI Express errors are reported via MSI and/or NMI/SMI/MCA/CPEI. When this bit is clear and if MSI enable bit in the Section 21.12.5.19, "MISCCTRLSTS: Misc. Control and Status Register (Dev #0, ESI Only)" on page 535 is set, then an MSI interrupt is generated for PCI Express errors. When this bit is clear, and 'System Error on Fatal Error Enable' bit in Section 21.12.4.25, "ROOTCON: PCI Express Root Control Register" on page 518 is set, then NMI/SMI/MCA is (also) generated for a PCI Express fatal error. Similar behavior for non-fatal and corrected errors.
3	RW	0	Enable ACPI mode for Hotplug When this bit is set, all HP events from the PCI Express port are handled via _HPGPE messages to the ICH and no MSI messages are ever generated for HP events (regardless of whether MSI is enabled at the root port or not) at the root port. When this bit is clear, _HPGPE message generation on behalf of root port HP events is disabled and OS can chose to generate MSI interrupt for HP events, by setting the MSI enable bit in root ports. This bit does not apply to the ESI ports. Clearing this bit (from being 1) schedules a Deassert_HPGPE event on behalf of the root port, provided there was any previous Assert_HPGPE message that was sent without an associated Deassert message.
2	RW	0	Enable ACPI mode for PM When this bit is set, all PM events at the PCI Express port are handled via _PMEGPE messages to the ICH, and no MSI interrupts are ever generated for PM events at the root port (regardless of whether MSI is enabled at the root port or not). When clear, _PMEGPE message generation for PM events is disabled and OS can chose to generate MSI interrupts for delivering PM events by setting the MSI enable bit in root ports. This bit does not apply to the ESI ports. Clearing this bit (from being 1) schedules a Deassert_PMEGPE event on behalf of the root port, provided there was any previous Assert_PMEGPE message that was sent without an associated Deassert message.
1	RWO	0h	Inbound Configuration enable When clear all inbound configuration transactions are sent a UR response by the receiving PCI Express port. When set, inbound configs are allowed.
0	RO	1	Set Host Bridge Class code When this bit is set, the class code register indicates "Host Bridge".

21.12.5.21 MISCCTRLSTS: Misc. Control and Status Register (Dev #1-10, PCIe Only)

Register: MISCCTRLSTS
Device: 1-10 (PCIe Only)
Function: 0
Offset: 188h

Bit	Attr	Default	Description
63:49	RV	0	Reserved
48	RW1C	0	Received PME_TO_ACK: Indicates that IOH received a PME turn off ack packet or it timed out waiting for the packet
47:37	RV	0	Reserved
36	RWS	0	**Form-Factor** Indicates what form-factor a particular root port controls 0 - CEM/Cable 1 - SIOM This bit is used to interpret bit 6 in the VPP serial stream for the port as either MRL# (CEM/Cable) input or EMLSTS# (SIOM) input. In case of cable form factor.
35	RWST	0	**Override System Error on PCIe Fatal Error Enable:** When set, fatal errors on PCI Express (that have been successfully propagated to the primary interface of the port) are sent to the IOH core error logic (for further escalation) regardless of the setting of the equivalent bit in the ROOTCTRL register. When clear, the fatal errors are only propagated to the IOH core error logic if the equivalent bit in ROOTCTRL register is set..
34	RWST	0	**Override System Error on PCIe Non-fatal Error Enable:** When set, non-fatal errors on PCI Express (that have been successfully propagated to the primary interface of the port) are sent to the IOH core error logic (for further escalation) regardless of the setting of the equivalent bit in the ROOTCTRL register. When clear, the non-fatal errors are only propagated to the IOH core error logic if the equivalent bit in ROOTCTRL register is set.
33	RWST	0	**Override System Error on PCIe Correctable Error Enable:** When set, correctable errors on PCI Express (that have been successfully propagated to the primary interface of the port) are sent to the IOH core error logic (for further escalation) regardless of the setting of the equivalent bit in the ROOTCTRL register. When clear, the correctable errors are only propagated to the IOH core error logic if the equivalent bit in ROOTCTRL register is set.
32	RW	0	**ACPI PME Interrupt Enable:** When set, Assert/Deassert_PMEGPE messages are enabled to be generated when ACPI mode is enabled for handling PME messages from PCI Express. When this bit is cleared (from a 1), a Deassert_PMEGPE message is scheduled on behalf of the root port if an Assert_PMEGPE message was sent earlier from the root port.
31	RWST	0	Disable L0s on transmitter: When set, IOH never puts its tx in L0s state, even if OS enables it via the Link Control register.
30	RW	0	**Inbound I/O disable:** When set, all inbound I/O are aborted and treated as UR.
29	RWST	1	cfg_to_en Disables/enables config timeouts, independently of other timeouts.
28	RWST	0	**to_dis** Disables timeouts completely.

Register: MISCCTRLSTS Device: 1-10 (PCIe Only) Function: 0 Offset: 188h			
Bit	**Attr**	**Default**	**Description**
27	RWST	0	System Interrupt Only on Link BW/Management Status This bit, when set, will disable generating MSI interrupt on link bandwidth (speed and/or width) and management changes, even if MSI is enabled, that is, will disable generating MSI when LNKSTS bits 15 and 14 are set. Whether or not this condition results in a system event like SMI/PMI/CPEI is dependent is masked or not in the XPCORERRMSK register.
26	RW	0	**Disable EOI broadcast to this PCIe link:** When set, EOI message will not be broadcast down this PCIe link. When clear, the port is a valid target for EOI broadcast.
25	RWST	0	**Peer2peer Memory Write Disable:** When set, peer2peer memory writes are master aborted otherwise they are allowed to progress per the peer2peer decoding rules.
24	RW	0	**Peer2peer Memory Read Disable:** When set, peer2peer memory reads are master aborted otherwise they are allowed to progress per the peer2peer decoding rules.
25:13	RV	0	Reserved
12	RV	1	Reserved
11:9	RV	0	Reserved
8:7	RW	0	PME2ACKTOCTRL
6	RWST	0	**Enable timeout for receiving PME_TO_ACK:** When set, IOH enables the timeout to receiving the PME_TO_ACK
5	RW	0	**Send PME_TURN_OFF message** When this bit is written with a 1b, IOH sends a PME_TURN_OFF message to the PCIe link. Hardware clears this bit when the message has been sent on the link.
4	RW	0	**Enable System Error only for AER** When this bit is set, the PCI Express errors do not trigger an MSI interrupt, regardless of the whether MSI is enabled or not. Whether or not PCI Express errors result in a system event like NMI/SMI/PMI/CPEI is dependent on whether the appropriate system error enable bits are set or not. See Section 16.6.3, "PCI Express Error Reporting Mechanism" on page 229 for details of how this bit interacts with other control bits in signalling errors to the IOH global error reporting logic. When this bit is clear, PCI Express errors are reported via MSI and/or NMI/SMI/MCA/CPEI. When this bit is clear and if MSI enable bit in the Section 21.12.5.19, "MISCCTRLSTS: Misc. Control and Status Register (Dev #0, ESI Only)" on page 535 is set, then an MSI interrupt is generated for PCI Express errors. When this bit is clear, and 'System Error on Fatal Error Enable' bit in Section 21.12.4.25, "ROOTCON: PCI Express Root Control Register" on page 518 is set, then NMI/SMI/MCA is (also) generated for a PCI Express fatal error. Similar behavior for non-fatal and corrected errors.

Register: MISCCTRLSTS Device: 1-10 (PCIe Only) Function: 0 Offset: 188h			
Bit	**Attr**	**Default**	**Description**
3	RW	0	**Enable ACPI mode for Hotplug** When this bit is set, all HP events from the PCI Express port are handled via _HPGPE messages to the ICH and no MSI messages are ever generated for HP events (regardless of whether MSI is enabled at the root port or not) at the root port. When this bit is clear, _HPGPE message generation on behalf of root port HP events is disabled and OS can chose to generate MSI interrupt for HP events, by setting the MSI enable bit in root ports. This bit does not apply to the ESI ports. Clearing this bit (from being 1) schedules a Deassert_HPGPE event on behalf of the root port, provided there was any previous Assert_HPGPE message that was sent without an associated Deassert message.
2	RW	0	**Enable ACPI mode for PM** When this bit is set, all PM events at the PCI Express port are handled via _PMEGPE messages to the ICH, and no MSI interrupts are ever generated for PM events at the root port (regardless of whether MSI is enabled at the root port or not). When clear, _PMEGPE message generation for PM events is disabled and OS can chose to generate MSI interrupts for delivering PM events by setting the MSI enable bit in root ports. This bit does not apply to the ESI ports. Clearing this bit (from being 1) schedules a Deassert_PMEGPE event on behalf of the root port, provided there was any previous Assert_PMEGPE message that was sent without an associated Deassert message.
1	RWO	0h	**Inbound Configuration enable** When clear all inbound configuration transactions are sent a UR response by the receiving PCI Express port. When set, inbound configs are allowed.
0	RW	0	**Set Host Bridge Class code** When this bit is set, the class code register indicates “Host Bridge”.

21.12.5.22 PCIE_IOU0_BIF_CTRL: PCIe IO Unit (IOU)0 Bifurcation Control Register

This control register holds bifurcation control information pertaining to the PCI Express IO Unit 0.

Register: PCIE_IOU0_BIF_CTRL Device: 3 Function: 0 Offset: 190h			
Bit	**Attr**	**Default**	**Description**
15:4	RV	0h	*Reserved*

Register: PCIE_IOU0_BIF_CTRL Device: 3 Function: 0 Offset: 190h			
Bit	**Attr**	**Default**	**Description**
3	WO	0	**IOU0 Start Bifurcation:** When software writes a 1 to this bit, IOH starts the port 0 bifurcation process. After writing to this bit, software can poll the Data Link Layer link active bit in the LNKSTS register to determine if a port is up and running. Once a port bifurcation has been initiated by writing a 1 to this bit, software cannot initiate any more write-1 to this bit (write of 0 is ok). Note that this bit can be written to a 1 in the same write that changes values for bits 2:0 in this register and in that case, the new value from the write to bits 2:0 take effect. This bit always reads a 0b.
2:0	RWS	000b	**IOU0 Bifurcation Control**: 111 Reserved 110 [1]/ Reserved 101 Reserved 100 x16 011 x8x8 (15:8 operate as x8, 7:0 operate as x8) 010 x8x4x4 (15:8 operate as x8, 7:4 operate as x4 and 3:0 operate as x4) 001 x4x4x8 (15:12 operate as x4, 11:8 operate as x4 and 7:0 operate as x8) 000 x4x4x4x4 (15:12 operate as x4, 11:8 operate as x4, 7:4 operate as x4 and 3:0 operate as x4) To select a port 0 bifurcation, software sets this field and then either a) sets bit 3 in this register to initiate training OR b) resets the entire IOH and on exit from that reset, IOH will bifurcate the ports per the setting in this field. Refer to for further description of the port bifurcation under bios feature.

21.12.5.23 PCIE_IOU1_BIF_CTRL: PCIe IO Unit (IOU)1 Bifurcation Control Register

This control register holds bifurcation control information pertaining to the PCI Express IO Unit 1.

Register: PCIE_IOU1_BIF_CTRL
Device: 7
Function: 0
Offset: 190h

Bit	Attr	Default	Description
15:4	RV	0	*Reserved*
3	WO	0	**IOU1 Start Bifurcation**: When software writes a 1 to this bit, IOH starts the port 1 bifurcation process. After writing to this bit, software can poll the Data Link Layer link active bit in the LNKSTS register to determine if a port is up and running. Once a port bifurcation has been initiated by writing a 1 to this bit, software cannot initiate any more write-1 to this bit (write of 0 is ok). Note that this bit can be written to a 1 in the same write that changes values for bits 2:0 in this register and in that case, the new value from the write to bits 2:0 take effect. This bit always reads a 0b.
2:0	RWS	000b	**IOU1 Bifurcation Control:** 111 Use strap settings to determine port bifurcation (default) 110 [1]/ Reserved 101 Reserved 100 x16 011 x8x8 (15:8 operate as x8, 7:0 operate as x8) 010 x8x4x4 (15:8 operate as x8, 7:4 operate as x4 and 3:0 operate as x4) 001 x4x4x8 (15:12 operate as x4, 11:8 operate as x4 and 7:0 operate as x8) 000 x4x4x4x4 (15:12 operate as x4, 11:8 operate as x4, 7:4 operate as x4 and 3:0 operate as x4) To select a port 1 bifurcation, software sets this field and then either a) sets bit 3 in this register to initiate training OR b) resets the entire IOH and on exit from that reset, IOH will bifurcate the ports per the setting in this field. Refer to for further description of the port bifurcation under bios feature.

21.12.5.24 PCIE_IOU2_BIF_CTRL: PCIe IO Unit (IOU)2 Bifurcation Control Register

This control register holds bifurcation control information pertaining to the PCI Express IO Unit 2.

Register: PCIE_IOU2_BIF_CTRL
Device: 1
Function: 0
Offset: 190h

Bit	Attr	Default	Description
15:4	RV	0h	*Reserved*

Register: PCIE_IOU2_BIF_CTRL Device: 1 Function: 0 Offset: 190h			
Bit	**Attr**	**Default**	**Description**
3	WO	0h	**IOU2 Start Bifurcation:** When software writes a 1 to this bit, IOH starts the port 2 bifurcation process. After writing to this bit, software can poll the Data Link Layer link active bit in the LNKSTS register to determine if a port is up and running. Once a port bifurcation has been initiated by writing a 1 to this bit, software cannot initiate any more write-1 to this bit (write of 0 is ok). Note that this bit can be written to a 1 in the same write that changes values for bits 1:0 in this register and in that case, the new value from the write to bits 1:0 take effect. This bit always reads a 0b.
2	RV	0h	*Reserved*
1:0	RWS	0b	**IOU2 Bifurcation Control**: 111 Reserved 110 Reserved 101 Reserved 100 Reserved 011 Reserved 010 Reserved 001 x4 000 x2x2 (3:2 operate as x2, 1:0 operate as x2) To select a port 2 bifurcation, software sets this field and then either a) sets bit 3 in this register to initiate training OR b) resets the entire IOH and on exit from that reset, IOH will bifurcate the ports per the setting in this field. Refer to further description of the port bifurcation under bios feature.

21.12.6 XP Common Block Link Control Registers

21.12.6.1 XP[7,3,1,0]DLLCTRL: XP DLL Control Register

Register: XP[7,3,1,0]DLLCTRL Device: 14 Function: 0 Offset: 4C0h Device: 13 Function: 3 Offset: 4C0h Device: 13 Function: 1 Offset: 4C0h Device: 13 Function: 0 Offset: 4C0h			
Bit	**Attr**	**Default**	**Description**
31:24	RV	0h	*Reserved*
23:20	RWS	3h	ack_period: This specifies the period after which a packet will be acked. The timer starts running once it is internally received. For X16, the default value is 3h. For X8 or X4, the number is scaled by 2 from the X16 number; for X2, the number is scaled by 4from the X16 number; and for x1, the number is scaled by 8 from the X16 number. Note: A value of 0 is illegal.
19:14	RWS	3h	fc_p_period: This specifies the period after which the flow control packet will be scheduled. This starts from the time at which the credit release is received by the link layer. For X16, the default number is 3h. For X8 or X4, the number is scaled by 2 from the X16 number; for X2, the number is scaled by 4 from the X16 number; and for x1, the number is scaled by 8 from the X16 number. Note: A value of 0 is illegal.

Register: XP[7,3,1,0]DLLCTRL Device: 14 Function: 0 Offset: 4C0h Device: 13 Function: 3 Offset: 4C0h Device: 13 Function: 1 Offset: 4C0h Device: 13 Function: 0 Offset: 4C0h			
Bit	**Attr**	**Default**	**Description**
14:10	RWS	3h	fc_np_period: This specifies the period after which the flow control packet will be scheduled. This starts from the time at which the credit release is received by the link layer. For X16, the default number is 3h. For X8 or X4, the number is scaled by 2 from the X16 number; for X2, the number is scaled by 4 from the X16 number; and for x1, the number is scaled by 8 from the X16 number. Note: A value of 0 is illegal.
9:5	RWS	3h	fc_c_period: This specifies the period after which the flow control packet will be scheduled. This starts from the time at which the credit release is received by the link layer. For X16, the default number is 3h. For X8 or X4, the number is scaled by 2 from the X16 number; for X2, the number is scaled by 4 from the X16 number; and for x1, the number is scaled by 8 from the X16 number. Note: A value of 0 is illegal.
4:0	RWS	1Ch	idle_fc_period: This is the time in which flow control updates are scheduled, if there are no new credits to be received. If L0s is not disabled, this specifies the number of microseconds after which the flow control packet will be sent. For ports where L0s is disabled, the timer value is calculated by multiplying this number by 256ns. Note: A value of 0 is illegal.

21.12.6.2 XP[7,3,1,0]RETRYCTRL: RetryControl Register

Register: XP[7,3,1,0]RETRYCTRL Device: 14 Function: 0 Offset: 4C4h Device: 13 Function: 3 Offset: 4C4h Device: 13 Function: 1 Offset: 4C4h Device: 13 Function: 0 Offset: 4C4h			
Bit	**Attr**	**Default**	**Description**
31:17	RV	0h	*Reserved*
16:14	RWS	4h	reinit_threshold: Specifies the number of retry attempts after which a recovery will be initiated. Note: A value of 0 is an illegal.
13:6	RWS	0	unuseentrintrybuf: The number of unusable entries in the retry buffer. There are 220 entries. Setting it very high may cause the link to not send any TLP's.
5:0	RWS	3h	replay_timer: Specifies the time in microseconds after which a replay will be initiated. Setting it to 0 will disable the timer. The timer accuracy is plus or minus 1us

21.13 IOH Defined PCI Express Error Registers

The contents of the next set of registers - XPCORERRSTS, XPCORERRMSK, XPUNCERRSTS, XPUNCERRMSK, XPUNCERRSEV, XPUNCERRPTR. The architecture model for error logging and escalation of internal errors is similar to that of PCI Express AER, except that these internal errors never trigger an MSI and are always reported to the system software. Mask bits mask the reporting of an error and severity bit controls escalation to either fatal or non-fatal error to the internal core error logic. Note that internal errors detected in the PCI Express cluster are not dependent on any other control bits for error escalation other than the mask bit defined in these registers. All these registers are sticky. Refer to Figure 16-6.

21.13.1 XPCORERRSTS - XP Correctable Error Status Register

Register: XPCORERRSTS
Device: 0-10
Function: 0
Offset: 200h

Bit	Attr	Default	Description
31:1	RV	0	Reserved
0	RW1CS	0	**PCI link bandwidth changed status** Note: This bit is implemented as an OR of LNKSTS[15] (LABS) and LNKSTS[14] (LBMS). The mask for XPCORERRSTS[0] is set to 1 by default. Thus in order to log bandwidth changes, LNKSTS[15:14], XPCORERRSTS[0] and XPCOREDMASK[0] need to be cleared. Once the xpcorerrsts[0] is unmasked and then set to 1 due to a bandwidth change LNKSTS[15:14] need to be cleared before clearing XPCORERRSTS[0].

21.13.2 XPCORERRMSK - XP Correctable Error Mask Register

Register: XPCORERRMSK
Device: 0-10
Function: 0
Offset: 204h

Bit	Attr	Default	Description
31:1	RV	0	Reserved
0	RWS	0	**PCI link bandwidth Changed mask** This bit is only functional when set for Device's 0, 3, and 7. Device 4 gets its mask value from Device 6, and Device 8 gets its mask value from Device 10.

21.13.3 XPUNCERRSTS - XP Uncorrectable Error Status Register

Register: XPUNCERRSTS
Device: 0-10
Function: 0
Offset: 208h

Bit	Attr	Default	Description
31:10	RV	0	Reserved
9	RWICS	0	**Outbound Poisoned Data:** Set when outbound poisoned data (from QPI or peer, write or read completion) is received by this port
8	RW1CS	0	**Received MSI writes greater than a DWORD data**
7	RV	0	Reserved
6	RW1CS	0	**Received PCIe completion with UR status**
5	RW1CS	0	**Received PCIe completion with CA status**
4	RW1CS	0	Sent completion with Unsupported Request
3	RW1CS	0	Sent completion with completion Abort
2	RV	0	Reserved
1	RW1CS	0	Outbound Switch FIFO data parity error detected
0	RV	0	Reserved

21.13.4 XPUNCERRMSK - XP Uncorrectable Error Mask Register

Register: XPUNCERRMSK
Device: 0-10
Function: 0
Offset: 20Ch

Bit	Attr	Default	Description
31:10	RV	0	Reserved
9	RWS	0	**Outbound Poisoned Data Mask:** Masks signaling of stop and scream condition to the core error logic
8	RWS	0	Received MSI writes greater than a DWORD data mask
7	RV	0	Reserved
6	RWS	0	Received PCIe completion with UR status mask
5	RWS	0	Received PCIe completion with CA status mask
4	RWS	0	Sent completion with Unsupported Request mask
3	RWS	0	Sent completion with Completer Abort mask
2	RV	0	Reserved
1	RWS	0	Outbound Switch FIFO data parity error detected mask
0	RV	0	Reserved

21.13.5 XPUNCERRSEV - XP Uncorrectable Error Severity Register

Register: XPUNCERRSEV
Device: 0-10
Function: 0
Offset: 210h

Bit	Attr	Default	Description
31:10	RV	0	Reserved
9	RWS	0	Outbound Poisoned Data Severity
8	RWS	0	**Received MSI writes greater than a DWORD data severity**
7	RV	1	Reserved
6	RWS	0	Received PCIe completion with UR status severity
5	RWS	0	Received PCIe completion with CA status severity
4	RWS	0	Sent completion with Unsupported Request severity
3	RWS	1	Sent completion with Completer Abort severity
2	RV	0	Reserved
1	RWS	1	Outbound Switch FIFO data parity error detected severity
0	RV	1	Reserved

21.13.5.1 XPUNCERRPTR - XP Uncorrectable Error Pointer Register

Register: XPUNCERRPTR
Device: 0-10
Function: 0
Offset: 214h

Bit	Attr	Default	Description
7:5	RV	0	Reserved
4:0	ROS	0	**XP Uncorrectable First Error Pointer** - This field points to which of the unmasked uncorrectable errors happened first. This field is only valid when the corresponding error is unmasked and the status bit is set and this field is rearmed to load again when the status bit indicated to by this pointer is cleared by software from 1 to 0. Value of 0x0 corresponds to bit 0 in XPUNCERRSTS register, value of 0x1 corresponds to bit 1, and so on.

21.13.5.2 UNCEDMASK: Uncorrectable Error Detect Status Mask

This register masks uncorrectable errors from causing the associated AER status bit to be set.

Register: UNCEDMASK
Device: 0-10
Function: 0
Offset: 218h

Bit	Attr	Default	Description
31:22	RV	0h	Reserved
21	RWST	1	ACS Violation Detect Mask
20	RWST	1	Received an Unsupported Request Detect Mask
19	RV	0	Reserved
18	RWST	1	Malformed TLP Detect Mask
17	RWST	1	Receiver Buffer Overflow Detect Mask
16	RWST	1	Unexpected Completion Detect Mask
15	RWST	1	Completer Abort Detect Mask
14	RWST	1	Completion Time-out Detect Mask
13	RWST	1	Flow Control Protocol Error Detect Mask
12	RWST	1	Poisoned TLP Detect Mask
11:6	RV	0h	Reserved
5	RWST	1	Surprise Down Error Detect Mask
4	RWST	1	Data Link Layer Protocol Error Detect Mask
3:0	RV	0	Reserved

21.13.5.3 COREDMASK: Correctable Error Detect Status Mask

This register masks correctable errors from causing the associated status bit in AER status register to be set.

Register: COREDMASK
Device: 0-10
Function: 0
Offset: 21Ch

Bit	Attr	Default	Description
31:14	RV	0	Reserved
13	RWST	1	Advisory Non-fatal Error Detect Mask
12	RWST	1	Replay Timer Time-out Detect Mask
11:9	RV	0	Reserved
8	RWST	1	Replay_Num Rollover Detect Mask
7	RWST	1	Bad DLLP Detect Mask
6	RWST	1	Bad TLP Detect Mask
5:1	RV	0	Reserved
0	RWST	1	Receiver Error Detect Mask

21.13.5.4 RPEDMASK - Root Port Error Detect Status Mask

This register masks the associated error messages (received from PCIe link and NOT the virtual ones generated internally), from causing the associated status bits in AER to be set.

Register: RPEDMASK
Device: 0-10
Function: 0
Offset: 220h

Bit	Attr	Default	Description
31:3	RV	0	Reserved
2	RWST	1	**Fatal error detect Detect mask**
1	RWST	1	**Non-Ffatal error detect Detect mask**
0	RWST	1	**Correctable error detect status mask**

21.13.5.5 XPUNCEDMASK - XP Uncorrectable Error Detect Mask Register

Register: XPUNCEDMASK
Device: 0-10
Function: 0
Offset: 224h

Bit	Attr	Default	Description
31:10	RV	0	Reserved
9	RWS	1	Outbound Poisoned Data Detect Mask
8	RWS	1	Received MSI writes greater than a DWORD data Detect Mask
7	RV	0	Reserved
6	RWS	1	Received PCIe completion with UR Detect Mask
5	RWS	1	Received PCIe completion with CA Detect Mask
4	RWS	1	Sent completion with Unsupported Request Detect Mask
3	RWS	1	Sent completion with Completer Abort Detect Mask
2	RV	0	Reserved
1	RWS	1	Outbound Switch FIFO data parity error Detect Mask
0	RV	0	Reserved

21.13.5.6 XPCOREDMASK - XP Correctable Error Detect Mask Register

Register: XPCOREDMASK
Device: 0-10
Function: 0
Offset: 228h

Bit	Attr	Default	Description
31:1	RV	0	Reserved
0	RWS	1	PCI link bandwidth changed Detect Mask

21.13.6 XPGLBERRSTS - XP Global Error Status Register

This register captures if an error is logged in any of two buckets of errors within XP, XP internal core logic, and PCI Express AER.

Register: XPGLBERRSTS
Device: 0-10
Function: 0
Offset: 230h

Bit	Attr	Default	Description
15:3	RV	0	Reserved
2	RW1CS	0	**PCIe AER Correctable Error** - A PCIe correctable error (either internally detected by IOH or a FATAL message received) was detected anew. Note that if that error was masked in the PCIe AER, it is not reported in this field. Software clears this bit by writing a 1 and at that stage, only "subsequent" PCIe unmasked correctable errors will set this bit. Conceptually, per the flow of PCI Express Base Spec 1.1 defined Error message control, this bit is set by the ERR_COR message that is enabled to cause a System Error notification. Refer to section titled PCI Express Error Reporting Specifics in the RAS chapter in IOH RAS for details of how this bit interacts with other control/ status bits in signalling errors to the IOH global error reporting logic.
1	RW1CS	0	**PCIe AER Non-fatal Error** - A PCIe non-fatal error (either internally detected by IOH or a FATAL message received) was detected anew. Note that if that error was masked in the PCIe AER, it is not reported in this field. Software clears this bit by writing a 1 and at that stage only "subsequent" PCIe unmasked non-fatal errors will set this bit again. Refer to section titled PCI Express Error Reporting Specifics in the RAS chapter in IOH RAS for details of how this bit interacts with other control/ status bits in signalling errors to the IOH global error reporting logic.
0	RW1CS	0	**PCIe AER Fatal Error** - A PCIe fatal error (either internally detected by IOH or a FATAL message received) was detected anew. Note that if that error was masked in the PCIe AER, it is not reported in this field. Software clears this bit by writing a 1 and at that stage, only "subsequent" PCIe unmasked fatal errors will set this bit. Refer to section titled PCI Express Error Reporting Specifics in the RAS chapter in IOH RAS for details of how this bit interacts with other control/ status bits in signalling errors to the IOH global error reporting logic.

21.13.7 XPGLBERRPTR - XP Global Error Pointer Register

This register captures if an error is logged in any of three buckets of errors within XP - XP internal and PCI Express AER.

Register: XPGLBERRPTR
Device: 0-7,9
Function: 0
Offset: 232h

Bit	Attr	Default	Description
15:3	RV	0	Reserved
2:0	ROS	0	**XP Cluster Global First Error Pointer** - This field points to which of the 3 errors indicated in the XPGLBERRSTS register happened first. This field is only valid when the corresponding status bit is set and this field is rearmed to load again when the status bit indicated to by this pointer is cleared by software from 1 to 0. Value of 0x0 corresponds to bit 0 in XPGLBERRSTS register, value of 0x1 corresponds to bit 1, and so on.

21.13.8 CTOCTRL: Completion Time-Out Control Register

Register: CTOCTRL
Device: 0-10
Function: 0
Offset: 1E0h

Bit	Attr	Default	Description
31:10	RV	0	*Reserved*
9:8	RW	0	XP-to-PCIe time-out select within 2s to 6.5s range: When OS selects a time-out range of 2s to 6.5s for XP (that affect NP tx issued to the PCIe/ESI) using the root port's DEVCON2 register, this field selects the sub-range within that larger range, for additional controllability. 00: 2s 01: 4s 10: 6.5s 11: Reserved Note: These values may vary by +/- 10%
7:0	RV	0	Reserved

21.13.9 PCIE_LER_SS_CTRLSTS: PCI Express Live Error Recovery/Stop and Scream Control and Status Register

Register: PCIE_LER_SS_CTRLSTS
Device: 0-10
Function: 0
Offset: 1E4h

Bit	Attr	Default	Description
31	RO	0	**LER_SS Status** Indicates that an error was detected which caused the PCIe port to go into a live error recovery mode. This bit remains set till all the associated unmasked status bits are cleared.
30:8	RV	0	*Reserved*
7	RWS	0	**XPUNCERRSTS_Received PCIe Completion With UR Status Mask** When clear, when the Received PCIE Completion With URstatus bit in the XPUNCERRSTS register is 1b, the LER_SS Status bit in this register will be set. When set, the register Received PCIE Completion With URstatus bit in the XPUNCERRSTS has no impact on the LER_SS Status bit in this register.
6	RWS	1	**XPUNCERRSTS_Received PCIe Completion With CA Status Mask** When clear, when the Received PCIE Completion With CAstatus bit in the XPUNCERRSTS register is 1b, the LER_SS Status bit in this register will be set. When set, the register Received PCIE Completion With CAstatus bit in the XPUNCERRSTS has no impact on the LER_SS Status bit in this register.
5	RWS	0	**XPUNCERRSTS_Stop and Scream Status Mask** When clear, when the Outbound Poisoned Data status bit in the XPUNCERRSTS register is 1b, the LER_SS Status bit in this register will be set. When set, the Outbound Poisoned Data status bit in the XPUNCERRSTS register has no impact on the LER_SS Status bit in this register
4	RV	0	Reserved

Register: PCIE_LER_SS_CTRLSTS Device: 0-10 Function: 0 Offset: 1E4h			
Bit	**Attr**	**Default**	**Description**
3	RWS	0	**ERRSTS_Fatal Error Messages Received Mask** When clear, when the Fatal Error Messages Received status bit in the RPERRSTS register is 1b, the LER_SS Status bit in this register will be set. When set, the Fatal Error Messages Received status bit in the RPERRSTS register has no impact on the LER_SS Status bit in this register
2	RWS	0	**ERRSTS_Non-Fatal Error Messages Received Mask** When clear, when the Non-Fatal Error Messages Received status bit in the RPERRSTS register is 1b, the LER_SS Status bit in this register will be set. When set, the Non-Fatal Error Messages Received status bit in the RPERRSTS register has no impact on the LER_SS Status bit in this register
1	RV	0	*Reserved*
0	RWS	0	LER_SS Enable **Note :** LER_SS should be disabled on the ESI port. When set, as long as the LER_SS Status bit in this register is set, the associated root port will go into LER/Stop and Scream mode. When clear, the root port can never go into LER/Stop and Scream mode. The SSMSK register contains additional mask bits that has an impact on whether on not the LER_SS Status bit will be set when LER_SS Enable is set. When a root port enters the LER_SS mode, it automatically brings the associated PCIe link down and the port behaves per the rules states in the PCI Express base spec for link down condition. Also, if the port enters LER_SS mode because of the Outbound Poisoned Data status bit being set (in the XPUNCERRSTS register), the associated outbound data should never be sent to the device south i.e. the link should go down before the poisoned data escapes to the PCIE link. SW can later clear the associated status bits (in either the XPUNCERRSTS, RPERRSTS, or UNCERRSTS register) and thus cause the LER_SS status bit in this register to clear and that would bring the port out of the LER_SS mode, and the port continues working normally i.e. the PCIe link starts training again and normal operation follows. It is up to software to provide sufficient time for the transactions pending in the inbound and outbound queues of the associated root port to have drained via the normal transaction flows, before causing the LER_SS status bit to clear. This procedure also must be followed if the LER_SS Status bit is set and it is desired to disable LER/Stop and Scream mode, afterwards the LER_SS Enable bit can be cleared Also, note that error logging/escalation as defined in the PCI Express spec, via AER registers and MSI mechanism remain unaffected by this bit. Do not enable on the ESI port.

21.13.10 XP[10:0]ERRCNTSEL: Error Counter Selection Register

Register: XP[10:0]ERRCNTSEL Device: 0-10 Function: 0 Offset: 400h			
Bit	**Attr**	**Default**	**Description**
31:0	RV	0h	Reserved

21.13.11 XP[10:0]ERRCNT: Error Counter Register

Register: XP[10:0]ERRCNT
Device: 0-10
Function: 0
Offset: 404h

Bit	Attr	Default	Description
7:0	RV	0	Reserved

21.14 Intel VT-d Memory Mapped Register

Table 21-30. Intel VT-d Memory Mapped Registers - 0x00 - 0xFF, 1000-10FF

VTD_VERSION	00h	INV_QUEUE_HEAD	80h
	04h	NV_QUEUE_HEAD	84h
VTD_CAP	08h	INV_QUEUE_TAIL	88h
	0Ch		8Ch
EX_VTD_CAP	10h	INV_QUEUE_ADD	90h
	14h		94h
GLBCMD	18h		98h
GLBSTS	1Ch	INV_COMP_STATUS	9Ch
ROOTENTRYADD	20h	INV_COMP_EVT_CTL	A0h
	24h	INV_COMP_EVT_DATA	A4h
CTXCMD	28h	INV_COMP_EVT_ADDR	A8h
	2Ch		ACh
	30h		B0h
FLTSTS	34h		B4h
FLTEVTCTRL	38h	INTR_REMAP_TABLE_BASE	B8h
FLTEVTDATA	3Ch		BCh
FLTEVTADDR	40h		C0h
FLTEVTUPRADDR	44h		C4h
	48h		C8h
	4Ch		CCh
	50h		D0h
	54h		D4h
	58h		D8h
	5Ch		DCh
	60h		E0h
PMEN	64h		E4h
PROT_LOW_MEM_BASE	68h		E8h
PROT_LOW_MEM_LIMIT	6Ch		ECh
PROT_HIGH_MEM_BASE	70h		F0h
	74h		F4h
PROT_HIGH_MEM_LIMIT	78h		F8h
	7Ch		FCh

Table 21-31. Intel VT-d Memory Mapped Registers - 0x100 - 0x1FF, 0x1100-0x11FF

FLTREC0				100h		180h
				104h		184h
				108h		188h
				10Ch		18Ch
FLTREC1				110h		190h
				114h		194h
				118h		198h
				11Ch		19Ch
FLTREC2				120h		1A0h
				124h		1A4h
				128h		1A8h
				12Ch		1ACh
FLTREC3				130h		1B0h
				134h		1B4h
				138h		1B8h
				13Ch		1BCh
FLTREC4				140h		1C0h
				144h		1C4h
				148h		1C8h
				14Ch		1CCh
FLTREC5				150h		1D0h
				154h		1D4h
				158h		1D8h
				15Ch		1DCh
FLTREC6				160h		1E0h
				164h		1E4h
				168h		1E8h
				16Ch		1ECh
FLTREC7				170h		1F0h
				174h		1F4h
				178h		1F8h
				17Ch		1FCh

IOTLBINV				200h	280h
				204h	284h
INVADDRREG				208h	288h
				20Ch	28Ch
				210h	290h
				214h	294h
				218h	298h
				21Ch	29Ch
				220h	2A0h
				224h	2A4h
				228h	2A8h
				22Ch	2ACh
				230h	2B0h
				234h	2B4h
				238h	2B8h
				23Ch	2BCh
				240h	2C0h
				244h	2C4h
				248h	2C8h
				24Ch	2CCh
				250h	2D0h
				254h	2D4h
				258h	2D8h
				25Ch	2DCh
				260h	2E0h
				264h	2E4h
				268h	2E8h
				26Ch	2ECh
				270h	2F0h
				274h	2F4h
				278h	2F8h
				27Ch	2FCh

21.14.1 Intel VT-d Memory Mapped Registers

The Intel VT-d registers are all addressed using aligned DWORD or aligned QWORD accesses. Any combination of BEs is allowed within a DWORD or QWORD access. The Intel VT-d remap engine registers corresponding to the non-Isoch port represented by Device#0 , occupy the first 4K of offset starting from the base address defined by VTBAR register.

Figure 21-2. Base Address of Intel VT-D Remap Engines

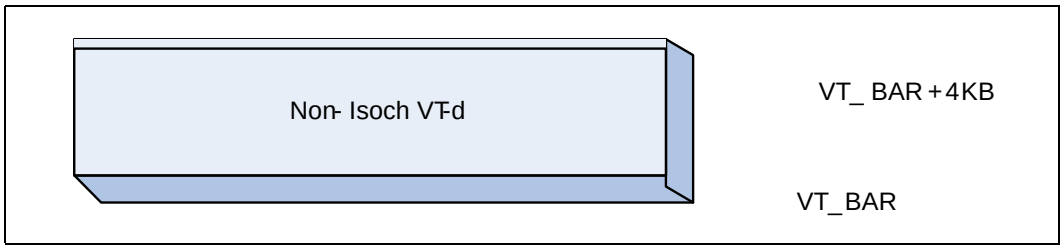

21.14.1.1 VTD_VERSION: Version Number Register

Register: VTD_VERSION
Addr: MMIO
BAR: VTBAR
Offset: 00h, 1000h

Bit	Attr	Default	Description
31:8	RV	0h	Reserved
7:4	RO	1h	Major Revision
3:0	RO	0h	Minor Revision

21.14.1.2 VTD_CAP[0:1]: Intel VT-d Capability Register

Register: EXT_VTD_CAP[0:1]
Addr: MMIO
BAR: VTBAR
Offset: 08h, 1008h

Bit	Attr	Default	Description
63:56	RV	0h	Reserved
55	RO	1h	DMA Read Draining: Supported in IOH
54	RO	1h	DMA Write Draining:Supported in IOH
53:48	RO	09h	**MAMV:** IOH support MAMV value of 9h.
47:40	RO	8h	**Number of Fault Recording Registers:** IOH supports 8 fault recording registers.
39	RO	1h	Page Selective Invalidation: Supported in IOH
38	RV	0h	Reserved
37:34	RV	0h	Reserved
33:24	RO	10h	**Fault Recording Register Offset:** Fault registers are at offset 100h
23	RWO	0h (Offset 08h)	Reserved
22	RWO	0h	Zero length DMA requests to write-only pages supported.

Register: EXT_VTD_CAP[0:1] Addr: MMIO BAR: VTBAR Offset: 08h, 1008h			
Bit	**Attr**	**Default**	**Description**
21:16	RO	2Fh (Offset 08h)	MGAW: This register is set by IOH based on the setting of the Non-Isoch GPA_LIMIT field in the VTGENCTRL register.
15:13	RV	0h	Reserved
12:8	RO	2h (Offset 08h)	**SAGAW:** IOH supports only 4 level walks on the VT-d engine
7	RO	0	**TCM:** IOHTB does not cache invalid pages
6	RO	1	**PHMR Support:** IOH supports protected high memory range
5	RO	1	**PLMR Support:** IOH supports protected low memory range
4	RV	0	Reserved
3	RO	0	**Advanced Fault Logging:** IOHTB does not support advanced fault logging
2:0	RO	010b	**Number of Domains Supported:** IOH supports 256 domains with 8 bit domain ID

21.14.1.3 EXT_VTD_CAP[0:1]: Extended Intel VT-d Capability Register

Register: EXT_VTD_CAP[0:1] Addr: MMIO BAR: VTBAR Offset: 10h, 1010h			
Bit	**Attr**	**Default**	**Description**
63:32	RV	0h	Reserved
23:20	RO	Fh	**Maximum Handle Mask Value:** IOH supports all 16 bits of handle being masked. Note IOH always performs global interrupt entry invalidation on any interrupt cache invalidation command and h/w never really looks at the mask value
19;18	RV	0h	Reserved
17:8	RO	20h	**Invalidation Unit Offset:** IOH has the invalidation registers at offset 200h
7	RWO	1 (Offset 10h), 0 (Offset 1010h)	0: Hardware does not support 1-setting of the SNP field in the page-table entries. 1: Hardware supports the 1-setting of the SNP field in the page-table entries. IOH supports snoop override only for the non-isoch Intel VT-d engine
6	RWO	1	**IOH supports pass through** Note that when this bit is set to 0, Intel VT-d spec requires error checking on the "type" field, that is, "type" field cannot have an encoding of 10b. If software set an encoding of 10b, h/w has to cause a fault
5	RO	1	IOH supports caching hints
4	RO	See Description	IA32 Extended Interrupt Mode: Default is 1 if DISAPICEXT = 0, else default = 0
3	RO	1	Interrupt Remapping Support: IOH supports this
2	RWO	1 (Offset 10h), 0 (Offset 1010h)	**Device TLB support:** IOH supports ATS for the non-isoch Intel VT-d engine. Note that when this bit is set to 0, Intel VT-d spec requires error checking on the "type" field, that is, "type" field cannot have an encoding of 01b. If software set an encoding of 01b, h/w has to cause a fault.
1	RWO	1	Queued Invalidation support: IOH supports this
0	RWO	0	**Coherency Support**: BIOS can write to this bit to indicate to hardware to either snoop or not-snoop the Interrupt table structures in memory (root/ context/pd/pt/irt)

21.14.1.4 GLBCMD[0:1]: Global Command Register

Register: GLBCMD[0:1] Addr: MMIO BAR: VTBAR Offset: 18h, 1018h			
Bit	**Attr**	**Default**	**Description**
31	RW	0h	Transalation Enable: This bit is used by software to disable (0) DMA-remapping in hardware or enable(1) in software.
30	RW	0h	**Set Root Table Pointer:** Software sets this field to set/update the root-entry table pointer used by hardware. The root-entry table pointer is specified through the Root-entry Table Address register. Hardware reports the status of the root table pointer set operation through the RTPS field in the Global Status register.
29	RO	0	Set Fault Log Pointer: N/A to IOH
28	RO	0	Enable Advanced Fault Logging: N/A to IOH
27	RO	0	Write Buffer Flush: N/A to IOH
26	RW	0	Queued Invalidation Enable: Software writes to this field to enable queued invalidations. 0: Disable queued invalidations. In this case, invalidations must be performed through the Context Command and IOTLB Invalidation Unit registers. 1: Enable use of queued invalidations. Once enabled, all invalidations must be submitted through the invalidation queue and the invalidation registers can no longer be used without going through an IOH reset. The invalidation queue address register must be initialized before enabling queued invalidations. Also software must make sure that all invalidations submitted prior via the register interface are all completed before enabling the queued invalidation interface.
25	RW	0	**Interrupt Remapping Enable:** 0: Disable Interrupt Remapping Hardware 1: Enable Interrupt Remapping Hardware Hardware reports the status of the interrupt-remap enable operation through the IRES field in the Global Status register.
24	RW	0	Set Interrupt Remap Table Pointer: Software sets this field to set/update the Interrupt Remap Table Pointer used by hardware. The interrupt remapping Table Pointer is specified through the interrupt Remapping Table Address Register.
23	RW	0	**Compatibility Format Interrupt:** Software writes to this field to enable / disable Compatibility Format Interrupt. The value reported in this field is reported only when interrupt-remapping is enabled and Legacy interrupt mode is active 0: Compatibilty Format Interrupts Blocked 1: Compatibilty Format Interrupts Processed as bypassing interrupt remapping.
22:0	RV	0	Reserved

21.14.1.5 GLBSTS[0:1]: Global Status Register

Register: GLBSTS[0:1] Addr: MMIO BAR: VTBAR Offset: 1Ch, 101Ch			
Bit	**Attr**	**Default**	**Description**
31	RO	0	**Translation Enable Status:** When set, indicates that translation hardware is enabled and when clear indicates the translation hardware is not enabled.

Register: GLBSTS[0:1] Addr: MMIO BAR: VTBAR Offset: 1Ch, 101Ch			
Bit	**Attr**	**Default**	**Description**
30	RO	0	**Set Root Table Pointer Status:** This field indicates the status of the root- table pointer in hardware.
29	RO	0	Set Fault Log Pointer: N/A to IOH
28	RO	0	Advanced Fault Logging Status: N/A to IOH
27	RO	0	Write Buffer Flush: N/A to IOH
26	RO	0	**Queued Invalidation Interface Status:** IOH sets this bit once it has completed the software command to enable the queued invalidation interface. Until then this bit is 0.
25	RO	0	I**nterrupt Remapping Enable Status:** IOH sets this bit once it has completed the software command to enable the interrupt remapping interface. Till then this bit is 0
24	RO		Interrupt Remapping Table Pointer Status: This field indicates the status of the interrupt remapping table pointer in hardware. This field is cleared by hardware when software sets the SIRTP field in the Global Command register. This field is set by hardware when hardware completes the set interrupt remap table pointer operation using the value provided in the Interrupt Remapping Table Address register
23	RO	0	Compatibility Format Interrupt Status: The value reported in this field is reported only when interrupt-remapping is enabled and Legacy interrupt mode is active 0: Compatibilty Format Interrupts Blocked 1: Compatibilty Format Interrupts Processed as bypassing interrupt remapping.
22:0	RV	0	Reserved

21.14.1.6 ROOTENTRYADD[0:1]: Root Entry Table Address Register

Register: ROOTENTRYADD[0:1] Addr: MMIO BAR: VTBAR Offset: 20h, 1020h			
Bit	**Attr**	**Default**	**Description**
63:12	RW	0	**Root Entry Table Base Address:** 4K aligned base address for the root entry table. IOH does not utilize bits 63:43 and checks for them to be 0. Software specifies the base address of the root-entry table through this register, and enables it in hardware through the *SRTP* field in the *Global Command* register. Reads of this register returns value that was last programmed to it.
11:0	RV	0	Reserved

21.14.1.7 CTXCMD[0:1]: Context Command Register

Register: CTXCMD[0:1]
Addr: MMIO
BAR: VTBAR
Offset: 28h, 1028

Bit	Attr	Default	Description
63	RW	0	Invalidate Context Entry Cache (ICC): Software requests invalidation of context-cache by setting this field. Software must also set the requested invalidation granularity by programming the CIRG field. Software must read back and check the ICC field to be clear to confirm the invalidation is complete. Software must not update this register when this field is set. Hardware clears the ICC field to indicate the invalidation request is complete. Hardware also indicates the granularity at which the invalidation operation was performed through the CAIG field. Software must not submit another invalidation request through this register while the ICC field is set. Since information from the context-cache may be used by hardware to tag IOTLB entries, software must perform domain-selective (or global) invalidation of IOTLB after the context cache invalidation has completed
62:61	RW	0	**Context Invalidation Request Granularity (CIRG)**: When requesting hardware to invalidate the context-entry cache (by setting the ICC field), software writes the requested invalidation granularity through this field. Following are the encoding for the 2-bit IRG field. 00: *Reserved* 01: Global Invalidation request. IOH supports this. 10: Domain-selective invalidation request. The target domain-id must be specified in the DID field. IOH supports this. 11: Device-selective invalidation request. The target SID must be specified in the SID field, and the domain-id (programmed in the context-entry for this device) must be provided in the DID field. IOH does not support this and alias this request to a domain-selective invalidation request. IOH supports this. Hardware indicates completion of the invalidation request by clearing the ICC field. At this time, hardware also indicates the granularity at which the actual invalidation was performed through the CAIG field.
60:59	RO	0	**Context Actual Invalidation Granularity (CAIG):** Hardware reports the granularity at which an invalidation request was processed through the CAIG field at the time of reporting invalidation completion (by clearing the ICC field). The following are the encoding for the 2-bit CAIG field. 00: Reserved. This is the value on reset. 01: Global Invalidation performed. IOH sets this in response to a global invalidation request. 10: Domain-selective invalidation performed using the domain-id that was specified by software in the DID field. IOH sets this in response to a domain-selective or device-selective invalidation request. IOH set this in response to a domain-selective invalidation request. 11: Device-selective invalidation performed.
58:34	RV	0	Reserved
33:32	RW	0	**Function Mask:** Since IOH does not perform any device selective invalidation, this field is a don't care. Used by IOH when performing device selective invalidation
31:16	RW	0	**Source ID**: IOH ignores this field. Used by IOH when performing device selective context cache invalidation.
15:0	RW	0	**Domain ID:** Indicates the id of the domain whose context-entries needs to be selectively invalidated. S/W needs to program this for both domain and device selective invalidates. IOH ignores bits 15:8 since it supports only a 8 bit Domain ID.

21.14.1.8 FLTSTS[0:1]: Fault Status Register

Register: FLTSTS[0:1]
Addr: MMIO
BAR: VTBAR
Offset: 34h, 1034h

Bit	Attr	Default	Description
31:16	RV	0	Reserved
15:8	ROS	0	**Fault Record Index:** This field is valid only when the Primary Fault Pending field is set. This field indicates the index (from base) of the fault recording register to which the first pending fault was recorded when the Primary Fault pending field was set by hardware.
7	RV	0	Reserved
6	RW1CS	0	**Invalidation Timeout Error:** Hardware detected a Device-IOTLB invalidation completion time-out. At this time, a fault event may be generated based on the programming of the Fault Event Control register.Hardware implementations not supporting Device-IOTLBs may implement this bit as RO.
5	RW1CS	0	**Invalidation Completion Timeout:** Hardware received no ATS invalidation completions during an invalidation completion timeout period, while there are one or more pending ATS invalidation requests waiting for invalidation completions. At this time, a fault event is generated based on the programming of the Fault Event Control register.
4	RW1CS	0	**Invalidation Queue Error:** Hardware detected an error associated with the invalidation queue. For example, hardware detected an erroneous or un-supported Invalidation Descriptor in the Invalidation Queue. At this time, a fault event is generated based on the programming of the Fault Event Control register.
3:2	RV	0	Reserved
1	ROS	0	**Primary Fault Pending:** This field indicates if there are one or more pending faults logged in the fault recording registers. 0: No pending faults in any of the fault recording registers 1: One or more fault recording registers has pending faults. The fault recording index field is updated by hardware whenever this field is set by hardware. Also, depending on the programming of fault event control register, a fault event is generated when hardware sets this field.
0	RW1CS	0	**Primary Fault Overflow:** Hardware sets this bit to indicate overflow of fault recording registers

21.14.1.9 FLTEVTCTRL[0:1]: Fault Event Control Register

Register: FLTEVTCTRL[0:1] Addr: MMIO BAR: VTBAR Offset: 38h, 1038h			
Bit	**Attr**	**Default**	**Description**
31	RW	1	**Interrupt Message Mask:** 1: Hardware is prohibited from issuing interrupt message requests. 0: Software has cleared this bit to indicate interrupt service is available. When a faulting condition is detected, hardware may issue a interrupt request (using the fault event data and fault event address register values) depending on the state of the interrupt mask and interrupt pending bits.
30	RO	0	**Interrupt Pending:** Hardware sets the IP field whenever it detects an interrupt condition. Interrupt condition is defined as when an interrupt condition occurs when hardware records a fault through one of the Fault Recording registers and sets the PPF field in Fault Status register. - Hardware detected error associated with the Invalidation Queue, setting the IQE field in the Fault Status register. - Hardware detected invalidation completion timeout error, setting the ICT field in the Fault Status register. - If any of the above status fields in the Fault Status register was already set at the time of setting any of these fields, it is not treated as a new interrupt condition. The IP field is kept set by hardware while the interrupt message is held pending. The interrupt message could be held pending due to interrupt mask (IM field) being set, or due to other transient hardware conditions. The IP field is cleared by hardware as soon as the interrupt message pending condition is serviced. This could be due to either (a) Hardware issuing the interrupt message due to either change in the transient hardware condition that caused interrupt message to be held pending or due to software clearing the IM field. (b) Software servicing all the pending interrupt status fields in the Fault Status register. - PPF field is cleared by hardware when it detects all the Fault Recording registers have Fault (F) field clear. - Other status fields in the Fault Status register is cleared by software writing back the value read from the respective fields.
29:0	RV	0	Reserved

21.14.1.10 FLTEVTDATA[0:1]: Fault Event Data Register

Register: FLTEVTDATA[0:1] Addr: MMIO BAR: VTBAR Offset: 3Ch, 103Ch			
Bit	**Attr**	**Default**	**Description**
31:16	RV	0	Reserved
15:0	RW	0	Interrupt Data

21.14.1.11 FLTEVTADDR[0:1]: Fault Event Address Register

Register: FLTEVTADDR[0:1] Addr: MMIO BAR: VTBAR Offset: 40h, 1040h			
Bit	**Attr**	**Default**	**Description**
31:2	RO	0	**Interrupt Address**: The interrupt address is interpreted as the address of any other interrupt from a PCI Express port.
1:0	RV	0	Reserved

21.14.1.12 FLTEVTUPADDR[0:1]: Fault Event Upper Address Register

Register: FLTEVTUPADDR[0:1] Addr: MMIO BAR: VTBAR Offset: 44h, 1044h			
Bit	**Attr**	**Default**	**Description**
31:0	RW	0	Address : IOH supports extended interrupt mode

21.14.1.13 PMEN[0:1] : Protected Memory Enable Register

Register: PMEN[0:1] Addr: MMIO BAR: VTBAR Offset: 64h, 1064h			
Bit	**Attr**	**Default**	**Description**
31	RWL	0	Enable Protected Memory as defined by the PROT_LOW(HIGH)_BASE and PROT_LOW(HIGH)_LIMIT registers This bit is RO when LT.CMD.LOCK.PMRC (OFFSET 0000h: LT.STS[12]=1) and RW when LT.CMD.LOCK.PMRC (OFFSET 0000h: LT.STS[12]=0
30:1	RV	0	Reserved
0	RO	0	Protected Region Status: This bit is set by IOH whenever it has completed enabling the protected memory region per the rules stated in the Intel VT-d spec

21.14.1.14 PROT_LOW_MEM_BASE[0:1] : Protected Memory Low Base Register

Register: PROT_LOW_MEM_BASE[0:1] Addr: MMIO BAR: VTBAR Offset: 68h, 1068h			
Bit	**Attr**	**Default**	**Description**
31:21	RWL	0	2 MB aligned base address of the low protected dram region This bit is RO when LT.CMD.LOCK.PMRC (OFFSET 0000h: LT.STS[12]=1) and RW when LT.CMD.LOCK.PMRC (OFFSET 0000h: LT.STS[12]=0) Note that Intel VT-d engine generated reads/writes (page walk, interrupt queue, invalidation queue read, invalidation status) themselves are allowed toward this region
20:0	RV	0	Reserved

21.14.1.15 PROT_LOW_MEM_LIMIT[0:1] : Protected Memory Low Limit Register

Register: PROT_LOW_MEM_LIMIT[0:1]
Addr: MMIO
BAR: VTBAR
Offset: 6Ch, 106Ch

Bit	Attr	Default	Description
31:24	RWL	0	2 MB aligned limit address of the low protected dram region This bit is RO when LT.CMD.LOCK.PMRC (OFFSET 0000h: LT.STS[12]=1) and RW when LT.CMD.LOCK.PMRC (OFFSET 0000h: LT.STS[12]=0)
23:0	RV	0	Reserved

21.14.1.16 PROT_HIGH_MEM_BASE[0:1] : Protected Memory High Base Register

Register: PROT_HIGH_MEM_BASE[0:1]
Addr: MMIO
BAR: VTBAR
Offset: 70h, 1070h

Bit	Attr	Default	Description
63:24	RWL	0	2 MB aligned base address of the high protected dram region This bit is RO when LT.CMD.LOCK.PMRC (OFFSET 0000h: LT.STS[12]=1) and RW when LT.CMD.LOCK.PMRC (OFFSET 0000h: LT.STS[12]=0) Note that Intel VT-d engine generated reads/writes (page walk, interrupt queue, invalidation queue read, invalidation status) themselves are allowed toward this region
23:0	RV	0	Reserved

21.14.1.17 PROT_HIGH_MEM_LIMIT[0:1] : Protected Memory Limit Base Register

Register: PROT_HIGH_MEM_LIMIT[0:1]
Addr: MMIO
BAR: VTBAR
Offset: 78h, 1078h

Bit	Attr	Default	Description
63:21	RWL	0	2 MB aligned limit address of the high protected dram region This bit is RO when LT.CMD.LOCK.PMRC (OFFSET 0000h: LT.STS[12]=1) and RW when LT.CMD.LOCK.PMRC (OFFSET 0000h: LT.STS[12]=0) Note that Intel VT-d engine generated reads/writes (page walk, interrupt queue, invalidation queue read, invalidation status) themselves are allowed toward this region
20:0	RV	0	Reserved

21.14.1.18 INV_QUEUE_HEAD[0:1]: Invalidation Queue Header Pointer Register

Register: INV_QUEUE_HEAD[0:1]
Addr: MMIO
BAR: VTBAR
Offset: 80h, 1080h

Bit	Attr	Default	Description
63:19	RV	0	Reserved
18:4	RO	0	**Queue Head**: Specifies the offset (128-bit aligned) to the invalidation queue for the command that will be fetched next by hardware. This field is incremented after the command has been fetched successfully and has been verified to be a valid/supported command.
3:0	RV	0	Reserved

21.14.1.19 INV_QUEUE_TAIL[0:1]: Invalidation Queue Tail Pointer Register

Register: INV_QUEUE_TAIL[0:1]
Addr: MMIO
BAR: VTBAR
Offset: 88h, 1088h

Bit	Attr	Default	Description
63:19	RV	0	Reserved
18:4	RW	0	**Queue Tail**: Specifies the offset (128-bit aligned) to the invalidation queue for the command that will be written next by software.
3:0	RV	0	Reserved

21.14.1.20 INV_QUEUE_ADD[0:1]: Invalidation Queue Address Register

Register: INV_QUEUE_ADD[0:1]
Addr: MMIO
BAR: VTBAR
Offset: 90h, 1090h

Bit	Attr	Default	Description
63:12	RW	0	This field points to the base of size-aligned invalidation request queue.
11:3	RV	0	Reserved
2:0	RW	0	**Queue Size:** This field specifies the length of the invalidation request queue. The number of entries in the invalidation queue is defined as 2^(X + 8) , where X is the value programmed in this field.

21.14.1.21 INV_COMP_STATUS[0:1]: Invalidation Completion Status Register

Register; INV_COMP_STATUS[0:1] Addr: MMIO BAR: VTBAR Offset: 9Ch, 109Ch			
Bit	**Attr**	**Default**	**Description**
31:1	RV	0	Reserved
0	RW1CS	0	**Invalidation Wait Descriptor Complete**: Indicates completion of Invalidation Wait Descriptor with Interrupt Flag (IF) field set

21.14.1.22 INV_COMP_EVT_CTL[0:1]: Invalidation Completion Event Control Register

Register: INV_COMP_EVT_CTL[0:1] Addr: MMIO BAR: VTBAR Offset: A0h, 10A0h			
Bit	**Attr**	**Default**	**Description**
31	RW	0	Interrupt Mask: 0: No masking of interrupt. When a invalidation event condition is detected, hardware issues an interrupt message (using the Invalidation Event Data & Invalidation Event Address register values). 1: This is the value on reset. Software may mask interrupt message generation by setting this field. Hardware is prohibited from sending the interrupt message when this field is set.
30	RO	0	Interrupt Pending: Hardware sets the IP field whenever it detects an interrupt condition. Interrupt condition is defined as: - An Invalidation Wait Descriptor with Interrupt Flag (IF) field set completed, setting the IWC field in the Fault Status register. - If the IWC field in the Invalidation Event Status register was already set at the time of setting this field, it is not treated as a new interrupt condition. The IP field is kept set by hardware while the interrupt message is held pending. The interrupt message could be held pending due to interrupt mask (IM field) being set, or due to other transient hardware conditions. The IP field is cleared by hardware as soon as the interrupt message pending condition is serviced. This could be due to either: (a) Hardware issuing the interrupt message due to either change in the transient hardware condition that caused interrupt message to be held pending or due to software clearing the IM field. (b) Software servicing the IWC field in the Fault Status register.
29:0	RV	0	Reserved

21.14.1.23 INV_COMP_EVT_DATA[0:1]: Invalidation Completion Event Data Register

Register: INV_COMP_EVT_DATA[0:1] Addr: MMIO BAR: VTBAR Offset: A4h, 10A4h			
Bit	**Attr**	**Default**	**Description**
31:16	RV	0	Reserved

Register: INV_COMP_EVT_DATA[0:1] Addr: MMIO BAR: VTBAR Offset: A4h, 10A4h			
Bit	**Attr**	**Default**	**Description**
15:0	RW	0	Interrupt Data

21.14.1.24 INV_COMP_EVT_ADDR[0:1]: Invalidation Completion Event Address Register

Register: INV_COMP_EVT_ADDR[0:1] Addr: MMIO BAR: VTBAR Offset: A8h, 10A8h			
Bit	**Attr**	**Default**	**Description**
31:2	RW	0	Interrupt Address
1:0	RV	0	Reserved

21.14.1.25 INTR_REMAP_TABLE_BASE[0:1]: Interrupt Remapping Table Base Address Register

RegisteR: INTR_REMAP_TABLE_BASE[0:1] Addr: MMIO BAR: VTBAR Offset: B8h, 10B8h			
Bit	**Attr**	**Default**	**Description**
63:12	RW	0	**Intr Remap Base:** This field points to the base of page-aligned interrupt remapping table. If the Interrupt Remapping Table is larger than 4KB in size, it must be size-aligned. Reads of this field returns value that was last programmed to it.
11	RWL	0	IA32 Extended Interrupt Enable 0: IA32 system is operating in legacy IA32 interrupt mode. Hardware interprets only 8-bit APICID in the Interrupt Remapping Table entries. 1: IA32 system is operating in extended IA32 interrupt mode. Hardware interprets 32-bit APICID in the Interrupt Remapping Table entries.
10:4	RV	0	Reserved
3:0	RW	0	**Size:** This field specifies the size of the interrupt remapping table. The number of entries in the interrupt remapping table is 2^(X+1), where X is the value programmed in this field.

21.14.1.26 FLTREC: Fault Record Register

Register: FLTREC Addr: MMIO BAR: VTBAR Offset: [170h:100h], [1170:1100h]			
Bit	**Attr**	**Default**	**Description**
127	RW1CS	0	**Fault (F):** Hardware sets this field to indicate a fault is logged in this fault recording register. The F field is set by hardware after the details of the fault is recorded in the PADDR, SID, FR and T fields. When this field is set, hardware may collapse additional faults from the same requestor (SID). Software writes the value read from this field to clear it.
126	ROS	0	Type of faulted DMA Request 0: DMA Write 1: DMA Read Request Field valid only when F bit is set
125:124	ROS	0	Address Type: This field captures the AT field from the faulted DMA request. Field valid only when F bit is set
123:104	RV	0	Reserved
103:96	ROS	0	Fault Reason: Reason for the first translation fault. See Intel VT-d spec for details. This field is only valid when Fault bit is set.
95:80	RV	0	Reserved
79:64	ROS	0	**Source Identifier:** Requester ID that faulted. Valid only when F bit is set
63:12	ROS	0	**GPA:** 4k aligned GPA for the faulting transaction. Valid only when F field is set
11:0	RV	0	Reserved

21.14.1.27 IOTLBINV[0:1] : IOTLB Invalidate Register

Register: IOTLBINV[0:1] Addr: MMIO BAR: VTBAR Offset: 208h, 1208h			
Bit	**Attr**	**Default**	**Description**
63	RW	0	Invalidate IOTLB cache (IVT): Software requests IOTLB invalidation by setting this field. Software must also set the requested invalidation granularity by programming the IIRG field. Hardware clears the IVT field to indicate the invalidation request is complete. Hardware also indicates the granularity at which the invalidation operation was performed through the IAIG field. Software must read back and check the IVT field to be clear to confirm the invalidation is complete. When IVT field is set, software must not update the contents of this register (and Invalidate Address register, i if it is being used), nor submit new IOTLB invalidation requests.
62	RV	0	**Reserved**

Register: IOTLBINV[0:1] Addr: MMIO BAR: VTBAR Offset: 208h, 1208h			
Bit	**Attr**	**Default**	**Description**
61:60	RW	0	**IOTLB Invalidation Request Granularity (IIRG):** When requesting hardware to invalidate the I/OTLB (by setting the IVT field), software writes the requested invalidation granularity through this IIRG field. Following are the encoding for the 2-bit IIRG field. 00: Reserved. Hardware ignores the invalidation request and reports invalidation complete by clearing the IVT field and reporting 00 in the AIG field. 01: Global Invalidation request. IOH supports this. 10: Domain-selective invalidation request. The target domain-id must be specified in the DID field. IOH supports this 11: Page-selective invalidation request. The target address, mask and invalidation hint must be specified in the Invalidate Address register, the domain-id must be provided in the DID field. IOH supports this.
59	RV	0	Reserved
58:57	RO	0	IOTLB Actual Invalidation Granularity (IAIG): Hardware reports the granularity at which an invalidation request was proceed through the AIG field at the time of reporting invalidation completion (by clearing the IVT field). The following are the encoding for the 2-bit IAIG field. 00: Reserved. 01: Global Invalidation performed. IOH sets this in response to a global IOTLB invalidation request. 010: Domain-selective invalidation performed using the domain-id that was specified by software in the DID field. IOH sets this in response to a domain-spelective IOTLB invalidation request. 11: IOH sets this in response to a page selective invalidation request.
56:50	RV	0	Reserved
49	RW	0	**Drain Reads**: IOH uses this to drain or not drain reads on an invalidation request.
48	RW	0	**Drain Writes:** IOH uses this to drain or not drain writes on an invalidation request
47:32	RW	0	**Domain ID:** Domain to be invalidated and is programmed by software for both page and domain selective invalidation requests. IOH ignores the bits 47:40 since it supports only an 8 bit Domain ID
31:0	RV	0	Reserved

21.14.1.28 INVADDRREG[1:0]: Invalidate Address Register

Register: INVADDRREG[1:0] Addr: MMIO BAR: VTBAR Offset: 200h, 1200h			
Bit	**Attr**	**Default**	**Description**
63:12	RW	0	Address To request a page-specific invalidation request to hardware, software must first write the corresponding guest physical address to this register, and then issue a page-specific invalidate command through the IOTLB_REG.
11:7	RV	0	Reserved

Register: INVADDRREG[1:0] Addr: MMIO BAR: VTBAR Offset: 200h, 1200h			
Bit	**Attr**	**Default**	**Description**
6	RW	0	**Invalidation Hint:** The field provides hint to hardware to preserve or flush the respective non-leaf page-table entries that may be cached in hardware. 0: Software may have modified both leaf and non-leaf page-table entries corresponding to mappings specified in the ADDR and AM fields. On a page-selective invalidation request, IOH must flush both the cached leaf and nonleaf page-table entries corresponding to mappings specified by ADDR and AM fields. IOH performs a domain-level invalidation on non-leaf entries and page-selective-domain-level invalidation at the leaf level 1: Software has not modified any non-leaf page-table entries corresponding to mappings specified in the ADDR and AM fields. On a page-selective invalidation request, IOH preserves the cached non-leaf page-table entries corresponding to mappings specified by ADDR and AM fields and performs only a page-selective invalidation at the leaf level
5:0	RW	0	Address Mask: IOH supports values of 0-9. All other values result in undefined results..

§

22 Ballout and Package Information

22.1 I/O Hub (IOH) Ballout

The following section presents preliminary ballout information for the IOH. This ballout is subject to change and is to be used for informational purposes only.

Figure 22-1. IOH Quadrant Map

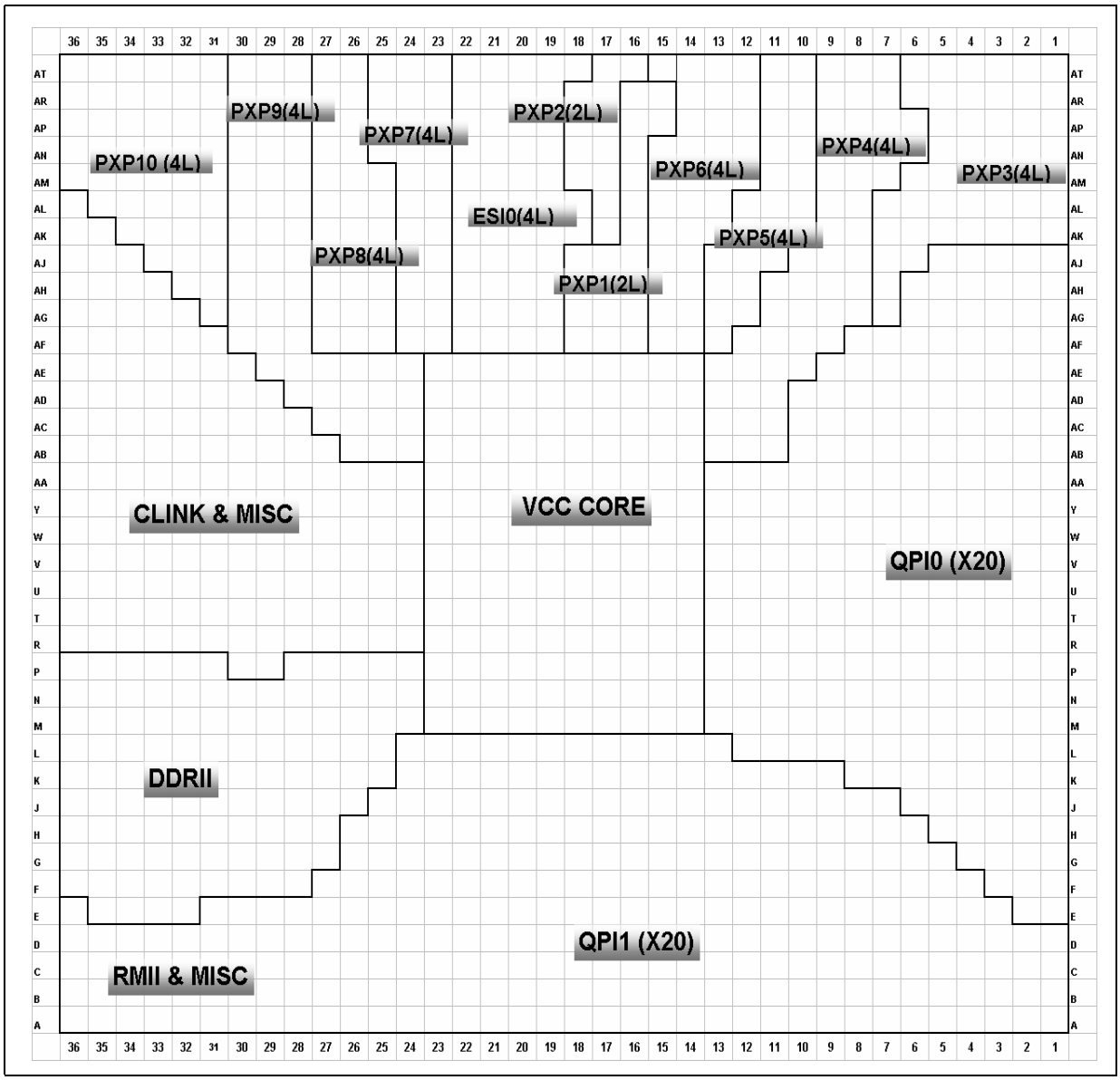

22.2 IOH Pin List and Ballout

Figure 22-2. IOH Ballout Left Side (Top View) (Sheet 1 of 2)

	36	35	34	33	32	31	30	29	28	27	26	25
AT	TEST[4]	VSS	VSS	VSS	PE10TN[0]	PE10TP[0]	VSS	PE9TN[1]	PE9TP[1]	PE8TN[3]	PE8TP[3]	VSS
AR	VSS	VSS	VCCPE1VRM	PE10TP[2]	VSS	PE10TN[1]	PE9TN[2]	PE9TP[2]	PE7TN[0]	VSS	PE8TN[2]	PE8TN[1]
AP	VSS	PE1RCOMPO	VSS	PE10TN[2]	PE10TP[3]	PE10TP[1]	PE9TP[3]	VSS	PE7TP[0]	PE7TP[1]	PE8TP[2]	PE7TN[2]
AN	PE1ICOMPO	PE1ICOMPI	PE1RBIAS	RSVD	PE10TN[3]	VSS	PE9TN[3]	PE9TN[0]	PE9TP[0]	PE7TN[1]	VSS	PE7TP[2]
AM	VSS	RSVD	PE10RP[1]	VSS	VSS	RSVD	PE1JCLKN	PE1JCLKP	VSS	RSVD	PE8RN[0]	RSVD
AL	FERR_N	VSS	PE10RN[1]	PE10RP[0]	PE9RP[2]	PE9RN[2]	VSS	PE9RN[0]	PE8RP[2]	PE8RN[2]	PE8RP[0]	VSS
AK	EXTSYSTRIG	PESBLCSEL	VSS	PE10RN[0]	PE10RN[2]	PE9RP[1]	PE9RN[1]	PE9RP[0]	PE9RN[3]	VSS	VSS	PE7RP[3]
AJ	VSS	QPISBLCSEL	TESTLO5	VSS	PE10RP[2]	VSS	PE10RP[3]	VSS	PE9RP[3]	PE8RP[1]	PE8RN[1]	PE8RP[3]
AH	XDPCLK1XP	VSS	NODEID[2]	TESTHI[4]	VSS	RSVD	PE10RN[3]	RSVD	RSVD	VSS	RSVD	PE8RN[3]
AG	XDPCLK1XN	QPIFREQSEL0	VSS	DUALIOH_QPIPRTSEL	SMI_N	VSS	RSVD	PE1CLKN	VSS	RSVD	RSVD	VSS
AF	VSS	TESTLO8	TESTLO9	VSS	TESTLO10	BMCINIT	VSS	PE1CLKP	ERR_N[1]	VSS	RSVD	VSS
AE	XDPDQ[12]	VSS	TESTLO11	TESTLO25	VSS	SMBUSID	INIT_N	VSS	ERR_N[2]	LTRESET_N	VSS	VCCAPE1
AD	XDPDQ[8]	XDPDQSP[1]	VSS	TESTLO21	NMI	VSS	PEHPSDA	SMBSDA	VSS	ERR_N[0]	THERMALERT_N	VCCAPE1
AC	VSS	XDPDQSN[1]	XDPDQ[13]	VSS	TESTLO12	A20M_N	VSS	TESTLO23	COREPLLPWRDET	VSS	THERMTRIP_N	RSVD
AB	XDPDQ[14]	VSS	XDPDQ[15]	XDPDQ[9]	VSS	INTR	TESTLO13	VSS	PEHPSCL	SMBSCL	VSS	VCCMISC33
AA	XDPDQ[10]	XDPDQSP[0]	VSS	XDPDQ[11]	RSVD	VSS	QPIFREQSEL1	QPICKFAIL	VSS	RSVD	TESTLO24	VSS
Y	VSS	XDPDQSN[0]	XDPDQ[4]	VSS	RSVD	XDPRDYACK_N	VSS	VRMEN	TESTLO15	VSS	VCC	VCC
W	XDPDQ[1]	VSS	XDPDQ[6]	XDPDQ[0]	VSS	XDPRDYREQ_N	RSVD	VSS	RSVD	TESTLO16	VSS	VSS
V	XDPDQ[3]	XDPDQ[5]	VSS	XDPDQ[2]	TESTLO17	VSS	TDO	VCCEPW	VSS	RSVD	TDI	VSS
U	VSS	XDPDQ[7]	CLCLK	VSS	CLRST_N	TMS	VSS	DDRFREQ[2]	TESTHI[2]	VSS	VCCXDP18	VTTXDP
T	VREFCL	VSS	CLDATA	TCK	VSS	DDRFREQ[3]	PEWIDTH[1]	VSS	PEWIDTH[4]	TESTLO18	VSS	VCCXDP18
R	PEWIDTH[2]	TESTLO19	VSS	PEWIDTH[0]	LEGACYIOH	VSS	TRST_N	TESTHI[3]	VSS	VCCCLPWRP	VCCEPW	VSS
P	VSS	DDRD[1]	DDRD[3]	VSS	DDRD[7]	DUALIOH	VSS	FWAGNT_ESIMODE	PEWIDTH[5]	VSS	VCCDDR18	VCCDDR18
N	VCCADDRPLL	VSS	DDRD[2]	DDRD[5]	VSS	DDREDQSN	DDREDQSP	VSS	PEWIDTH[3]	ME_CLK_SRC	VSS	VCCDDR18
M	DDRD[4]	DDRDM	VSS	DDRDM_N	DDRD[0]	VSS	DDRD[6]	DDRDRVCRES	VSS	DDRRES[0]	VCCDDR18	VSS
L	VSS	RSVD	RSVD	VSS	RSVD	RSVD	VSS	DDRCRES	DDRSLEWCRES	VSS	RSVD	VCCDDR18
K	DDRBA[1]	VSS	DDRCLKN	DDRCLKP	VSS	DDRBA[2]	DDRRES[1]	VSS	DDRCOMPX	RSVD	VSS	RSVD

Figure 22-2. IOH Ballout Left Side (Top View) (Sheet 2 of 2)

	36	35	34	33	32	31	30	29	28	27	26	25
J	DDRA[14]	DDRA[12]	VSS	DDRBA[0]	DDRA[13]	VSS	DDRA[2]	DDRA[7]	VSS	RMIITXD[1]	RMIICLKREFOUT	VSS
H	VSS	RSVD	RSVD	VSS	DDRA[4]	DDRA[5]	VSS	DDRA[11]	DDRCAS_N	VSS	QPI1VRMVREFRX1	VSS
G	DDRA[1]	VSS	DDRPLLREFCLKN	DDRPLLREFCLKP	VSS	DDRA[8]	DDRA[10]	VSS	RMIICLK	RMIITXEN	VSS	QPI1RNDAT[1]
F	DDRA[0]	DDRA[3]	VSS	DDRA[9]	DDRWE_N	VSS	DDRODT	DDRRAS_N	VSS	VSS	QPI1RNDAT[2]	QPI1RPDAT[2]
E	VSS	DDRA[6]	DDRCS_N	VSS	DDRCKE	RMIITXD[0]	VSS	RMIIRXD[1]	VSS	QPI1RNDAT[3]	QPI1RPDAT[3]	VSS
D	TESTLO26	VSS	COREPWRGOOD	CORERST_N	VSS	RMIIMDIO	RMIIMDC	VSS	QPI1RPDAT[5]	QPI1RNDAT[5]	VSS	QPI1RNDAT[4]
C	VSS	PLLPWRDET	VSS	TESTLO22	AUXPWRGOOD	VSS	VSS	VCCQPI1VRMRX1	VCCQPI1VRMRX2	VSS	QPI1RPDAT[8]	QPI1RNDAT[8]
B	VSS	VSS	VSS	VSS	RMIIRXD[0]	VSS	VCCQPI1VRMRX0	VCCQPI1VRMRX3	VSS	QPI1RPDAT[7]	QPI1RNDAT[7]	VSS
A	TEST[1]	VSS	VSS	VSS	VSS	RMIICRSDV	VCCAQPI1RXBG	VSS	QPI1RPDAT[6]	QPI1RNDAT[6]	VSS	QPI1RPDAT[9]
	36	35	34	33	32	31	30	29	28	27	26	25

Figure 22-3. IOH Ballout Center Side (Top View)

	24	23	22	21	20	19	18	17	16	15	14	13
AT	RSVD	RSVD	VCCDPE1PLL	VSS	VCCAPE1PLL	VCCAPE1BG	VCCPEVRM	PE2TP[1]	VSS	PE6TN[1]	PE6TP[1]	PE0JCLKP
AR	PE8TP[1]	PE7TP[3]	VSS	ESITP[2]	ESITN[2]	ESITN[0]	VSS	PE2TN[1]	PE1TN[1]	PE1TP[1]	PE6TN[2]	VSS
AP	VSS	PE7TN[3]	VSS	RSVD	VSS	ESITP[0]	PE2TN[0]	PE2TP[0]	PE1TN[0]	VSS	PE6TP[2]	PE5TN[3]
AN	PE8TP[0]	PE8TN[0]	VSS	ESITN[3]	ESITN[1]	ESITP[1]	RSVD	VSS	PE1TP[0]	PE6TN[0]	PE6TP[0]	PE0RBIAS
AM	RSVD	VSS	RSVD	ESITP[3]	RSVD	VSS	PE2RP[1]	PE2RN[1]	PE6TN[3]	PE6TP[3]	VSS	PE5RN[2]
AL	PE7RP[2]	PE7RN[2]	VSS	VSS	ESIRN[1]	ESIRP[0]	ESIRN[0]	PE2RN[0]	VSS	PE6RN[1]	PE5RP[3]	PE5RN[3]
AK	PE7RN[3]	PE7RP[1]	VSS	ESIRN[2]	ESIRP[1]	ESIRP[3]	VSS	PE2RP[0]	PE1RP[0]	PE6RP[1]	PE6RP[2]	VSS
AJ	VSS	PE7RN[1]	VSS	ESIRP[2]	VSS	ESIRN[3]	PE1RN[1]	PE1RP[1]	PE1RN[0]	VSS	PE6RN[2]	PE6RP[3]
AH	PE7RN[0]	PE7RP[0]	VSS	RSVD	RSVD	RSVD	RSVD	VSS	RSVD	RSVD	RSVD	RSVD
AG	VSS	VSS	VSS	VSS	VSS	VSS	VSS	VSS	VSS	VSS	VSS	VSS
AF	VSS	VCCAPE1	VCCAPE1	VCCAPE1	VCCAPE1	VCCAPE	VSS	VCCAPE	VSS	VCCAPE	VSS	VCCAPE
AE	VCCAPE1	VCCAPE1	VCCAPE1	VCCAPE1	VCCAPE1	VCCAPE	VCCAPE	VCCAPE	VCCAPE	VCCAPE	VCCAPE	VCCAPE
AD	VCCAPE1	VCCAPE1	VCCAPE1	VCCAPE1	VCCAPE1	VCCAPE	VCCAPE	VCCAPE	VCCAPE	VCCAPE	VCCAPE	VCCAPE
AC	VSS	VSS	VCC	VSS	VCC	VCCAPE	VSS	VCCAPE	VSS	VCCAPE	VSS	VCCAPE
AB	VCCMISC33	VCC	VSS	VCC	VSS	VCC	VSS	VCC	VSS	VCC	VSS	VSS
AA	VCC	VSS	VCC	VSS	VCC	VSS	VCC	VSS	VCC	VCCAQPI0	VCCAQPI0	VCCAQPI0
Y	VSS	VCC	VSS	VCC	VSS	VCC	VSS	VCC	VSS	VCCAQPI0	VCCAQPI0	VSS
W	VCC	VSS	VCC	VSS	VCC	VSS	VCC	VSS	VCC	VCCAQPI0	VCCAQPI0	VCCAQPI0
V	VCC	VCC	VSS	VCC	VSS	VCC	VSS	VCC	VSS	VCCAQPI0	VCCAQPI0	VSS
U	VSS	VSS	VCC	VSS	VCC	VSS	VCC	VSS	VCC	VCCAQPI0	VCCAQPI0	VCCAQPI0
T	VCCEPW	VCCEPW	VSS	VCCEPW	VSS	VCC	VSS	VCC	VSS	VCCAQPI0	VCCAQPI0	VSS
R	VTTDDR	VSS	VCCEPW	VSS	VCC	VSS	VCC	VSS	VCC	VSS	VCCAQPI0	VCCAQPI0
P	VSS	VCCDDR18	VSS	VCCEPW	VSS	VCC	VSS	VCC	VSS	VCC	VSS	VCCAQPI0
N	VCCDDR18	VSS	VCCEPW	VSS	VSS	VCCAQPI1	VCCAQPI1	VCCAQPI1	VCCAQPI1	VCCAQPI1	VCCAQPI1	VCCAQPI1
M	VCCDDR18	VCCDDR18	VSS	VCCMISC33EPW	VCCAQPI1	VCCAQPI1	VCCAQPI1	VCCAQPI1	VCCAQPI1	VCCAQPI1	VCCAQPI1	VCCAQPI1
L	VSS	VSS	VCCEPW	VSS	VCCAQPI1	VCCAQPI1	VSS	VCCAQPI1	VSS	VCCAQPI1	VSS	VCCAQPI1
K	RSVD	VCCEPW	VCCEPW	VCCMISC33EPW	VCCMISC33EPW	VCCAQPI1	VSS	VCCAQPI1	VSS	VCCAQPI1	VSS	RSVD
J	RSVD	QPI1VRMVREFRX0	VSS	RSVD	VSS	RSVD	VSS	VSS	RSVD	VSS	QPI1ICOMP	QPI1RCOMP
H	QPI1RNDAT[0]	QPI1RPDAT[0]	VSS	RSVD	RSVD	VSS	RSVD	RSVD	QPI1TPDAT[16]	QPI1TNDAT[16]	VSS	QPI1TXBG[0]
G	QPI1RPDAT[1]	VSS	QPI1RXBG[1]	QPI1RXBG[0]	VSS	QPI1RNDAT[18]	QPI1RPDAT[18]	VSS	VSS	QPI1TNDAT[17]	QPI1TPDAT[17]	VSS
F	VSS	RSVD	VCCQPI1VRMRXOP1	VSS	QPI1RNDAT[19]	QPI1RPDAT[19]	VSS	RSVD	QPI1TPDAT[15]	VSS	QPI1TNDAT[18]	QPI1TPDAT[18]
E	QPI1RPCLK[0]	QPI1RNCLK[0]	VSS	QPI1RPDAT[17]	QPI1RNDAT[17]	VSS	QPI1RNDAT[16]	QPI1RPDAT[16]	RSVD	QPI1TNDAT[15]	VSS	QPI1TNDAT[19]
D	QPI1RPDAT[4]	VSS	RSVD	VCCQPI1VRMRXOP0	VSS	QPI1RNDAT[15]	QPI1RPDAT[15]	VSS	VSS	QPI1TNDAT[14]	QPI1TPDAT[14]	VSS
C	VSS	QPI1RNDAT[11]	QPI1RPDAT[11]	VSS	QPI1RNDAT[14]	QPI1RPDAT[14]	VSS	QPI1VRMVREFRX3	VCCQPI1VRMRXOP3	VSS	QPI1TNDAT[13]	QPI1TPDAT[13]

Figure 22-3. IOH Ballout Center Side (Top View)

	24	23	22	21	20	19	18	17	16	15	14	13
B	RSVD	RSVD	VSS	QPI1RNDAT[12]	QPI1RPDAT[12]	VSS	QPI1VRMVREFRX2	VCCAQPI1TXBG	QPI1TPDAT[12]	QPI1TNDAT[12]	VSS	QPI1TNDAT[10]
A	QPI1RNDAT[9]	VSS	QPI1RPDAT[10]	QPI1RNDAT[10]	VSS	QPI1RPDAT[13]	QPI1RNDAT[13]	VSS	VSS	QPI1TPDAT[11]	QPI1TNDAT[11]	VSS
	24	23	22	21	20	19	18	17	16	15	14	13

Figure 22-4. IOH Ballout Right (Top View) (Sheet 1 of 2)

	12	11	10	9	8	7	6	5	4	3	2	1
AT	PE0JCLKN	VSS	PE5TN[1]	PE4TN[3]	PE4TP[3]	PE4TP[1]	VSS	PE3TN[3]	PE3TP[3]	VSS	VSS	TEST[3]
AR	TESTLO1	PE5TP[2]	PE5TP[1]	PE5TN[0]	VSS	PE4TN[1]	PE4TP[0]	PE4TN[0]	PE3TN[1]	VSS	VSS	VSS
AP	PE5TP[3]	PE5TN[2]	VSS	PE5TP[0]	PE4TP[2]	PE4TN[2]	PE3TN[2]	VSS	PE3TP[1]	PE0ICOMPI	VCCDPEPLL	VSS
AN	VSS	PE0CLKP	PE0CLKN	TESTLO2	TESTLO3	VSS	PE3TP[2]	PE3TP[0]	PE3TN[0]	VSS	VCCAPEBG	VCCAPEPLL
AM	PE5RP[2]	RSVD	RSVD	VSS	PE4RP[1]	PE4RN[1]	TESTLO4	RSVD	VSS	RSVD	RSVD	PE0RCOMPO
AL	PE6RP[0]	VSS	PE5RP[0]	PE4RP[2]	PE4RN[2]	PE3RP[3]	VSS	PE3RN[2]	PE3RN[1]	PE3RP[1]	RESETO_N	PE0ICOMPO
AK	PE6RN[0]	PE5RN[1]	PE5RN[0]	PE4RP[3]	VSS	PE3RN[3]	PE3RP[0]	PE3RP[2]	VSS	RSVD	VCCTS	VSS
AJ	PE6RN[3]	PE5RP[1]	VSS	PE4RN[3]	PE4RP[0]	PE4RN[0]	PE3RN[0]	VSS	QPI0TNDAT[2]	TSIREF	VSS	QPI0TNDAT[4]
AH	VSS	RSVD	RSVD	RSVD	RSVD	VSS	VSS	QPI0TPDAT[1]	QPI0TPDAT[2]	VSS	QPI0TNDAT[5]	QPI0TPDAT[4]
AG	VSS	VSS	VSS	RSVD	RSVD	VSS	QPI0TNDAT[0]	QPI0TNDAT[1]	VSS	QPI0TNDAT[3]	QPI0TPDAT[5]	VSS
AF	VCCAPE	VSS	RSVD	RSVD	VSS	RSVD	QPI0TPDAT[0]	VSS	QPI0TNDAT[6]	QPI0TPDAT[3]	VSS	QPI0TNDAT[7]
AE	VCCAPE	VSS	RSVD	VSS	RSVD	RSVD	VSS	VCCQPI0VRMTX	QPI0TPDAT[6]	VSS	QPI0TNDAT[8]	QPI0TPDAT[7]
AD	VCCAPE	VSS	RSVD	RSVD	RSVD	VSS	VCCQPI0VRMRXOP2	VCCAQPI0PLL	VSS	QPI0TNDAT[9]	QPI0TPDAT[8]	VSS
AC	VCCAPE	VSS	VCCQPI0VRMTXOP0	RSVD	VSS	QPI0REFCLKN	RSVD	VSS	RSVD	QPI0TPDAT[9]	VSS	QPI0TNCLK[0]
AB	VSS	VSS	QPI0VRMVREF4	VSS	QPI0TXBG[1]	QPI0REFCLKP	VSS	QPI0TPDAT[19]	RSVD	VSS	QPI0TPDAT[10]	QPI0TPCLK[0]
AA	VCCAQPI0	VSS	VSS	QPI0RCOMP	QPI0TXBG[0]	VSS	QPI0TPDAT[18]	QPI0TNDAT[19]	VSS	QPI0TPDAT[13]	QPI0TNDAT[10]	VSS
Y	VSS	VSS	RSVD	QPI0ICOMP	VSS	QPI0TPDAT[17]	QPI0TNDAT[18]	VSS	QPI0TPDAT[14]	QPI0TNDAT[13]	VSS	QPI0TNDAT[11]
W	VCCAQPI0	VCCAQPI0	RSVD	VSS	QPI0TNDAT[16]	QPI0TNDAT[17]	VSS	QPI0TNDAT[15]	QPI0TNDAT[14]	VSS	QPI0TNDAT[12]	QPI0TPDAT[11]
V	VSS	VSS	VSS	RSVD	QPI0TPDAT[16]	VSS	QPI0TPDAT[15]	RSVD	VSS	VCCQPI0VRMRXOP3	QPI0TPDAT[12]	VSS
U	VCCAQPI0	VCCAQPI0	RSVD	RSVD	RSVD	VSS	RSVD	QPI0RPDAT[16]	VSS	QPI0VRMVREF3	VCCAQPI0TXBG	VSS
T	VSS	VSS	RSVD	VSS	RSVD	QPI0RPDAT[18]	VSS	QPI0RNDAT[16]	QPI0RPDAT[15]	VSS	QPI0VRMVREF2	QPI0RNDAT[13]
R	VCCAQPI0	VSS	VSS	RSVD	VSS	QPI0RNDAT[18]	QPI0RPDAT[19]	VSS	QPI0RNDAT[15]	QPI0RPDAT[14]	VSS	QPI0RPDAT[13]
P	VCCAQPI0	VSS	RSVD	RSVD	RSVD	VSS	QPI0RNDAT[19]	QPI0RNDAT[17]	VSS	QPI0RNDAT[14]	QPI0RPDAT[12]	VSS
N	VCCAQPI0	RSVD	VSS	VSS	RSVD	QPI0RXBG[0]	VSS	QPI0RPDAT[17]	VCCQPI0VRMRXOP0	VSS	QPI0RNDAT[12]	QPI0RNDAT[10]

Figure 22-4. IOH Ballout Right (Top View) (Sheet 2 of 2)

	12	11	10	9	8	7	6	5	4	3	2	1
M	VCCAQPI1	QPI0VRMVREF1	VSS	RSVD	VSS	QPI0RXBG[1]	VCCQPI0VRMRXOP1	VSS	RSVD	QPI0RPDAT[11]	VSS	QPI0RPDAT[10]
L	VSS	VSS	QPI0VRMVREF0	RSVD	QPI0RPDAT[0]	VSS	RSVD	QPI0RNCLK[0]	VSS	QPI0RNDAT[11]	RSVD	VSS
K	RSVD	QPI1VRMVREFTX	VCCQPI1VRMTXOP0	VSS	QPI0RNDAT[0]	QPI0RPDAT[1]	VSS	QPI0RPCLK[0]	QPI0RPDAT[4]	VSS	RSVD	QPI0RNDAT[9]
J	VSS	RSVD	RSVD	VSS	VSS	QPI0RNDAT[1]	QPI0RPDAT[2]	VSS	QPI0RNDAT[4]	QPI0RNDAT[8]	VSS	QPI0RPDAT[9]
H	QPI1TXBG[1]	VSS	RSVD	RSVD	VSS	VSS	QPI0RNDAT[2]	QPI0RPDAT[3]	VSS	QPI0RPDAT[8]	QPI0RNDAT[7]	VSS
G	QPI1REFCLKP	QPI1REFCLKN	VSS	RSVD	RSVD	VSS	VSS	QPI0RNDAT[3]	QPI0RNDAT[5]	VSS	QPI0RPDAT[7]	QPI0RNDAT[6]
F	VSS	RSVD	VCCQPI1VRMRXOP2	VSS	QPI1TPDAT[0]	QPI1TNDAT[0]	VSS	VSS	QPI0RPDAT[5]	VCCQPI0VRMRX2	VSS	QPI0RPDAT[6]
E	QPI1TPDAT[19]	VSS	VCCAQPI1PLL	VCCQPI1VRMTX	VSS	QPI1TNDAT[1]	QPI1TPDAT[1]	VSS	VSS	VCCQPI0VRMRX1	VCCQPI0VRMRX3	VSS
D	RSVD	RSVD	VSS	QPI1TPDAT[6]	QPI1TNDAT[6]	VSS	QPI1TPDAT[2]	QPI1TNDAT[2]	VSS	VSS	VCCQPI0VRMRX0	VCCAQPI0RXBG
C	VSS	QPI1TPDAT[9]	QPI1TNDAT[9]	VSS	QPI1TPDAT[3]	QPI1TNDAT[3]	VSS	RSVD	RSVD	VSS	VSS	VSS
B	QPI1TPDAT[10]	VSS	QPI1TPDAT[8]	QPI1TNDAT[8]	VSS	QPI1TPDAT[5]	QPI1TNDAT[5]	VSS	RSVD	VSS	VSS	TEST[2]
A	QPI1TPCLK[0]	QPI1TNCLK[0]	VSS	QPI1TPDAT[7]	QPI1TNDAT[7]	VSS	QPI1TPDAT[4]	QPI1TNDAT[4]	VSS	VSS	TEST[0]	
	12	11	10	9	8	7	6	5	4	3	2	1

Table 22-1. Pin Listing by Pin Name (Sheet 1 of 33)

Pin Name	Signal Name	Signal Buffer Type	Direction
AT36	TEST[4]	No Connect	I/O
AT35	VSS	Analog	PWR
AT34	VSS	Analog	PWR
AT33	VSS	Analog	PWR
AT32	PE10TN[0]	PCIEX2	O
AT31	PE10TP[0]	PCIEX2	O
AT30	VSS	Analog	PWR
AT29	PE9TN[1]	PCIEX2	O
AT28	PE9TP[1]	PCIEX2	O
AT27	PE8TN[3]	PCIEX2	O
AT26	PE8TP[3]	PCIEX2	O
AT25	VSS	Analog	PWR
AT24	RSVD	No Connect	
AT23	RSVD	No Connect	
AT22	VCCDPE1PLL	Analog	PWR
AT21	VSS	Analog	PWR
AT20	VCCAPE1PLL	Analog	PWR
AT19	VCCAPE1BG	Analog	PWR
AT18	VCCPEVRM	Analog	PWR
AT17	PE2TP[1]	PCIEX2	O
AT16	VSS	Analog	PWR
AT15	PE6TN[1]	PCIEX2	O
AT14	PE6TP[1]	PCIEX2	O
AT13	PE0JCLKP	HCSL	I
AT12	PE0JCLKN	HCSL	I
AT11	VSS	Analog	PWR
AT10	PE5TN[1]	PCIEX2	O
AT9	PE4TN[3]	PCIEX2	O
AT8	PE4TP[3]	PCIEX2	O
AT7	PE4TP[1]	PCIEX2	O
AT6	VSS	Analog	PWR
AT5	PE3TN[3]	PCIEX2	O
AT4	PE3TP[3]	PCIEX2	O
AT3	VSS	Analog	PWR
AT2	VSS	Analog	PWR
AT1	TEST[3]	No Connect	I/O
AR36	VSS	Analog	PWR
AR35	VSS	Analog	PWR
AR34	VCCPE1VRM	Analog	PWR
AR33	PE10TP[2]	PCIEX2	O

Table 22-1. Pin Listing by Pin Name (Sheet 2 of 33)

Pin Name	Signal Name	Signal Buffer Type	Direction
AR32	VSS	Analog	PWR
AR31	PE10TN[1]	PCIEX2	O
AR30	PE9TN[2]	PCIEX2	O
AR29	PE9TP[2]	PCIEX2	O
AR28	PE7TN[0]	PCIEX2	O
AR27	VSS	Analog	PWR
AR26	PE8TN[2]	PCIEX2	O
AR25	PE8TN[1]	PCIEX2	O
AR24	PE8TP[1]	PCIEX2	O
AR23	PE7TP[3]	PCIEX2	O
AR22	VSS	Analog	PWR
AR21	ESITP[2]	PCIEX	O
AR20	ESITN[2]	PCIEX	O
AR19	ESITN[0]	PCIEX	O
AR18	VSS	Analog	PWR
AR17	PE2TN[1]	PCIEX2	O
AR16	PE1TN[1]	PCIEX2	O
AR15	PE1TP[1]	PCIEX2	O
AR14	PE6TN[2]	PCIEX2	O
AR13	VSS	Analog	PWR
AR12	TESTLO1	Analog	I/O
AR11	PE5TP[2]	PCIEX2	O
AR10	PE5TP[1]	PCIEX2	O
AR9	PE5TN[0]	PCIEX2	O
AR8	VSS	Analog	PWR
AR7	PE4TN[1]	PCIEX2	O
AR6	PE4TP[0]	PCIEX2	O
AR5	PE4TN[0]	PCIEX2	O
AR4	PE3TN[1]	PCIEX2	O
AR3	VSS	Analog	PWR
AR2	VSS	Analog	PWR
AR1	VSS	Analog	PWR
AP36	VSS	Analog	PWR
AP35	PE1RCOMPO	Analog	I/O
AP34	VSS	Analog	PWR
AP33	PE10TN[2]	PCIEX2	O
AP32	PE10TP[3]	PCIEX2	O
AP31	PE10TP[1]	PCIEX2	O
AP30	PE9TP[3]	PCIEX2	O
AP29	VSS	Analog	PWR

Table 22-1. Pin Listing by Pin Name (Sheet 3 of 33)

Pin Name	Signal Name	Signal Buffer Type	Direction
AP28	PE7TP[0]	PCIEX2	O
AP27	PE7TP[1]	PCIEX2	O
AP26	PE8TP[2]	PCIEX2	O
AP25	PE7TN[2]	PCIEX2	O
AP24	VSS	Analog	PWR
AP23	PE7TN[3]	PCIEX2	O
AP22	VSS	Analog	PWR
AP21	RSVD	No Connect	
AP20	VSS	Analog	PWR
AP19	ESITP[0]	PCIEX	O
AP18	PE2TN[0]	PCIEX2	O
AP17	PE2TP[0]	PCIEX2	O
AP16	PE1TN[0]	PCIEX2	O
AP15	VSS	Analog	PWR
AP14	PE6TP[2]	PCIEX2	O
AP13	PE5TN[3]	PCIEX2	O
AP12	PE5TP[3]	PCIEX2	O
AP11	PE5TN[2]	PCIEX2	O
AP10	VSS	Analog	PWR
AP9	PE5TP[0]	PCIEX2	O
AP8	PE4TP[2]	PCIEX2	O
AP7	PE4TN[2]	PCIEX2	O
AP6	PE3TN[2]	PCIEX2	O
AP5	VSS	Analog	PWR
AP4	PE3TP[1]	PCIEX2	O
AP3	PE0ICOMPI	Analog	I/O
AP2	VCCDPEPLL	Analog	PWR
AP1	VSS	Analog	PWR
AN36	PE1ICOMPO	Analog	I/O
AN35	PE1ICOMPI	Analog	I/O
AN34	PE1RBIAS	Analog	I/O
AN33	RSVD	No Connect	
AN32	PE10TN[3]	PCIEX2	O
AN31	VSS	Analog	PWR
AN30	PE9TN[3]	PCIEX2	O
AN29	PE9TN[0]	PCIEX2	O
AN28	PE9TP[0]	PCIEX2	O
AN27	PE7TN[1]	PCIEX2	O
AN26	VSS	Analog	PWR
AN25	PE7TP[2]	PCIEX2	O

Table 22-1. Pin Listing by Pin Name (Sheet 4 of 33)

Pin Name	Signal Name	Signal Buffer Type	Direction
AN24	PE8TP[0]	PCIEX2	O
AN23	PE8TN[0]	PCIEX2	O
AN22	VSS	Analog	PWR
AN21	ESITN[3]	PCIEX	O
AN20	ESITN[1]	PCIEX	O
AN19	ESITP[1]	PCIEX	O
AN18	RSVD	No Connect	
AN17	VSS	Analog	PWR
AN16	PE1TP[0]	PCIEX2	O
AN15	PE6TN[0]	PCIEX2	O
AN14	PE6TP[0]	PCIEX2	O
AN13	PE0RBIAS	Analog	I/O
AN12	VSS	Analog	PWR
AN11	PE0CLKP	HCSL	I
AN10	PE0CLKN	HCSL	I
AN9	TESTLO2	Analog	I/O
AN8	TESTLO3	Analog	I/O
AN7	VSS	Analog	PWR
AN6	PE3TP[2]	PCIEX2	O
AN5	PE3TP[0]	PCIEX2	O
AN4	PE3TN[0]	PCIEX2	O
AN3	VSS	Analog	PWR
AN2	VCCAPEBG	Analog	PWR
AN1	VCCAPEPLL	Analog	PWR
AM36	VSS	Analog	PWR
AM35	RSVD	No Connect	
AM34	PE10RP[1]	PCIEX2	I
AM33	VSS	Analog	PWR
AM32	VSS	Analog	PWR
AM31	RSVD	No Connect	
AM30	PE1JCLKN	HCSL	I
AM29	PE1JCLKP	HCSL	I
AM28	VSS	Analog	PWR
AM27	RSVD	No Connect	
AM26	PE8RN[0]	PCIEX2	I
AM25	RSVD	No Connect	
AM24	RSVD	No Connect	
AM23	VSS	Analog	PWR
AM22	RSVD	No Connect	
AM21	ESITP[3]	PCIEX	O

Table 22-1. Pin Listing by Pin Name (Sheet 5 of 33)

Pin Name	Signal Name	Signal Buffer Type	Direction
AM20	RSVD	No Connect	
AM19	VSS	Analog	PWR
AM18	PE2RP[1]	PCIEX2	I
AM17	PE2RN[1]	PCIEX2	I
AM16	PE6TN[3]	PCIEX2	O
AM15	PE6TP[3]	PCIEX2	O
AM14	VSS	Analog	PWR
AM13	PE5RN[2]	PCIEX2	I
AM12	PE5RP[2]	PCIEX2	I
AM11	RSVD	No Connect	
AM10	RSVD	No Connect	
AM9	VSS	Analog	PWR
AM8	PE4RP[1]	PCIEX2	I
AM7	PE4RN[1]	PCIEX2	I
AM6	TESTLO4	Analog	I/O
AM5	RSVD	No Connect	
AM4	VSS	Analog	PWR
AM3	RSVD	No Connect	
AM2	RSVD	No Connect	
AM1	PE0RCOMPO	Analog	I/O
AL36	FERR_N	GPIO	O
AL35	VSS	Analog	PWR
AL34	PE10RN[1]	PCIEX2	I
AL33	PE10RP[0]	PCIEX2	I
AL32	PE9RP[2]	PCIEX2	I
AL31	PE9RN[2]	PCIEX2	I
AL30	VSS	Analog	PWR
AL29	PE9RN[0]	PCIEX2	I
AL28	PE8RP[2]	PCIEX2	I
AL27	PE8RN[2]	PCIEX2	I
AL26	PE8RP[0]	PCIEX2	I
AL25	VSS	Analog	PWR
AL24	PE7RP[2]	PCIEX2	I
AL23	PE7RN[2]	PCIEX2	I
AL22	VSS	Analog	PWR
AL21	VSS	Analog	PWR
AL20	ESIRN[1]	PCIEX	I
AL19	ESIRP[0]	PCIEX	I
AL18	ESIRN[0]	PCIEX	I
AL17	PE2RN[0]	PCIEX2	I

Table 22-1. Pin Listing by Pin Name (Sheet 6 of 33)

Pin Name	Signal Name	Signal Buffer Type	Direction
AL16	VSS	Analog	PWR
AL15	PE6RN[1]	PCIEX2	I
AL14	PE5RP[3]	PCIEX2	I
AL13	PE5RN[3]	PCIEX2	I
AL12	PE6RP[0]	PCIEX2	I
AL11	VSS	Analog	PWR
AL10	PE5RP[0]	PCIEX2	I
AL9	PE4RP[2]	PCIEX2	I
AL8	PE4RN[2]	PCIEX2	I
AL7	PE3RP[3]	PCIEX2	I
AL6	VSS	Analog	PWR
AL5	PE3RN[2]	PCIEX2	I
AL4	PE3RN[1]	PCIEX2	I
AL3	PE3RP[1]	PCIEX2	I
AL2	RESETO_N	GPIO	I/O
AL1	PE0ICOMPO	Analog	I/O
AK36	EXTSYSTRIG	GPIO	I/O
AK35	PESBLCSEL	GPIO	I
AK34	VSS	Analog	PWR
AK33	PE10RN[0]	PCIEX2	I
AK32	PE10RN[2]	PCIEX2	I
AK31	PE9RP[1]	PCIEX2	I
AK30	PE9RN[1]	PCIEX2	I
AK29	PE9RP[0]	PCIEX2	I
AK28	PE9RN[3]	PCIEX2	I
AK27	VSS	Analog	PWR
AK26	VSS	Analog	PWR
AK25	PE7RP[3]	PCIEX2	I
AK24	PE7RN[3]	PCIEX2	I
AK23	PE7RP[1]	PCIEX2	I
AK22	VSS	Analog	PWR
AK21	ESIRN[2]	PCIEX	I
AK20	ESIRP[1]	PCIEX	I
AK19	ESIRP[3]	PCIEX	I
AK18	VSS	Analog	PWR
AK17	PE2RP[0]	PCIEX2	I
AK16	PE1RP[0]	PCIEX2	I
AK15	PE6RP[1]	PCIEX2	I
AK14	PE6RP[2]	PCIEX2	I
AK13	VSS	Analog	PWR

Table 22-1. Pin Listing by Pin Name (Sheet 7 of 33)

Pin Name	Signal Name	Signal Buffer Type	Direction
AK12	PE6RN[0]	PCIEX2	I
AK11	PE5RN[1]	PCIEX2	I
AK10	PE5RN[0]	PCIEX2	I
AK9	PE4RP[3]	PCIEX2	I
AK8	VSS	Analog	PWR
AK7	PE3RN[3]	PCIEX2	I
AK6	PE3RP[0]	PCIEX2	I
AK5	PE3RP[2]	PCIEX2	I
AK4	VSS	Analog	PWR
AK3	RSVD	No Connect	
AK2	VCCTS	Analog	PWR
AK1	VSS	Analog	PWR
AJ36	VSS	Analog	PWR
AJ35	QPISBLCSEL	GPIO	I
AJ34	TESTLO5	GPIO	I
AJ33	VSS	Analog	PWR
AJ32	PE10RP[2]	PCIEX2	I
AJ31	VSS	Analog	PWR
AJ30	PE10RP[3]	PCIEX2	I
AJ29	VSS	Analog	PWR
AJ28	PE9RP[3]	PCIEX2	I
AJ27	PE8RP[1]	PCIEX2	I
AJ26	PE8RN[1]	PCIEX2	I
AJ25	PE8RP[3]	PCIEX2	I
AJ24	VSS	Analog	PWR
AJ23	PE7RN[1]	PCIEX2	I
AJ22	VSS	Analog	PWR
AJ21	ESIRP[2]	PCIEX	I
AJ20	VSS	Analog	PWR
AJ19	ESIRN[3]	PCIEX	I
AJ18	PE1RN[1]	PCIEX2	I
AJ17	PE1RP[1]	PCIEX2	I
AJ16	PE1RN[0]	PCIEX2	I
AJ15	VSS	Analog	PWR
AJ14	PE6RN[2]	PCIEX2	I
AJ13	PE6RP[3]	PCIEX2	I
AJ12	PE6RN[3]	PCIEX2	I
AJ11	PE5RP[1]	PCIEX2	I
AJ10	VSS	Analog	PWR
AJ9	PE4RN[3]	PCIEX2	I

Table 22-1. Pin Listing by Pin Name (Sheet 8 of 33)

Pin Name	Signal Name	Signal Buffer Type	Direction
AJ8	PE4RP[0]	PCIEX2	I
AJ7	PE4RN[0]	PCIEX2	I
AJ6	PE3RN[0]	PCIEX2	I
AJ5	VSS	Analog	PWR
AJ4	QPI0TNDAT[2]	Intel QPI	O
AJ3	TSIREF	Analog	I
AJ2	VSS	Analog	PWR
AJ1	QPI0TNDAT[4]	Intel QPI	O
AH36	XDPCLK1XP	DDR	O
AH35	VSS	Analog	PWR
AH34	NODEID[2]	GPIO	I
AH33	TESTHI[4]	GPIO	I
AH32	VSS	Analog	PWR
AH31	RSVD	No Connect	
AH30	PE10RN[3]	PCIEX2	I
AH29	RSVD	No Connect	
AH28	RSVD	No Connect	
AH27	VSS	Analog	PWR
AH26	RSVD	No Connect	
AH25	PE8RN[3]	PCIEX2	I
AH24	PE7RN[0]	PCIEX2	I
AH23	PE7RP[0]	PCIEX2	I
AH22	VSS	Analog	PWR
AH21	RSVD	No Connect	
AH20	RSVD	No Connect	
AH19	RSVD	No Connect	
AH18	RSVD	No Connect	
AH17	VSS	Analog	PWR
AH16	RSVD	No Connect	
AH15	RSVD	No Connect	
AH14	RSVD	No Connect	
AH13	RSVD	No Connect	
AH12	VSS	Analog	PWR
AH11	RSVD	No Connect	
AH10	RSVD	No Connect	
AH9	RSVD	No Connect	
AH8	RSVD	No Connect	
AH7	VSS	Analog	PWR
AH6	VSS	Analog	PWR
AH5	QPI0TPDAT[1]	Intel QPI	O

Table 22-1. Pin Listing by Pin Name (Sheet 9 of 33)

Pin Name	Signal Name	Signal Buffer Type	Direction
AH4	QPI0TPDAT[2]	Intel QPI	O
AH3	VSS	Analog	PWR
AH2	QPI0TNDAT[5]	Intel QPI	O
AH1	QPI0TPDAT[4]	Intel QPI	O
AG36	XDPCLK1XN	DDR	O
AG35	QPIFREQSEL0	GPIO	I
AG34	VSS	Analog	PWR
AG33	DUALIOH_QPIPRTSEL	GPIO	I
AG32	SMI_N	GPIO	I
AG31	VSS	Analog	PWR
AG30	RSVD	No Connect	
AG29	PE1CLKN	HCSL	I
AG28	VSS	Analog	PWR
AG27	RSVD	No Connect	
AG26	RSVD	No Connect	
AG25	VSS	Analog	PWR
AG24	VSS	Analog	PWR
AG23	VSS	Analog	PWR
AG22	VSS	Analog	PWR
AG21	VSS	Analog	PWR
AG20	VSS	Analog	PWR
AG19	VSS	Analog	PWR
AG18	VSS	Analog	PWR
AG17	VSS	Analog	PWR
AG16	VSS	Analog	PWR
AG15	VSS	Analog	PWR
AG14	VSS	Analog	PWR
AG13	VSS	Analog	PWR
AG12	VSS	Analog	PWR
AG11	VSS	Analog	PWR
AG10	VSS	Analog	PWR
AG9	RSVD	No Connect	
AG8	RSVD	No Connect	
AG7	VSS	Analog	PWR
AG6	QPI0TNDAT[0]	Intel QPI	O
AG5	QPI0TNDAT[1]	Intel QPI	O
AG4	VSS	Analog	PWR
AG3	QPI0TNDAT[3]	Intel QPI	O
AG2	QPI0TPDAT[5]	Intel QPI	O
AG1	VSS	Analog	PWR

Table 22-1. Pin Listing by Pin Name (Sheet 10 of 33)

Pin Name	Signal Name	Signal Buffer Type	Direction
AF36	VSS	Analog	PWR
AF35	TESTLO8	GPIO	I
AF34	TESTLO9	GPIO	I
AF33	VSS	Analog	PWR
AF32	TESTLO10	GPIO	I
AF31	BMCINIT	GPIO	I
AF30	VSS	Analog	PWR
AF29	PE1CLKP	HCSL	I
AF28	ERR_N[1]	GPIO	O
AF27	VSS	Analog	PWR
AF26	RSVD	No Connect	
AF25	VSS	Analog	PWR
AF24	VSS	Analog	PWR
AF23	VCCAPE1	Analog	PWR
AF22	VCCAPE1	Analog	PWR
AF21	VCCAPE1	Analog	PWR
AF20	VCCAPE1	Analog	PWR
AF19	VCCAPE	Analog	PWR
AF18	VSS	Analog	PWR
AF17	VCCAPE	Analog	PWR
AF16	VSS	Analog	PWR
AF15	VCCAPE	Analog	PWR
AF14	VSS	Analog	PWR
AF13	VCCAPE	Analog	PWR
AF12	VCCAPE	Analog	PWR
AF11	VSS	Analog	PWR
AF10	RSVD	No Connect	
AF9	RSVD	No Connect	
AF8	VSS	Analog	PWR
AF7	RSVD	No Connect	
AF6	QPI0TPDAT[0]	Intel QPI	O
AF5	VSS	Analog	PWR
AF4	QPI0TNDAT[6]	Intel QPI	O
AF3	QPI0TPDAT[3]	Intel QPI	O
AF2	VSS	Analog	PWR
AF1	QPI0TNDAT[7]	Intel QPI	O
AE36	XDPDQ[12]	DDR	I/O
AE35	VSS	Analog	PWR
AE34	TESTLO11	GPIO	I/O
AE33	TESTLO25	GPIO	I/O

Table 22-1. Pin Listing by Pin Name (Sheet 11 of 33)

Pin Name	Signal Name	Signal Buffer Type	Direction
AE32	VSS	Analog	PWR
AE31	SMBUSID	GPIO	I
AE30	INIT_N	GPIO	I
AE29	VSS	Analog	PWR
AE28	ERR_N[2]	GPIO	O
AE27	LTRESET_N	GPIO	O
AE26	VSS	Analog	PWR
AE25	VCCAPE1	Analog	PWR
AE24	VCCAPE1	Analog	PWR
AE23	VCCAPE1	Analog	PWR
AE22	VCCAPE1	Analog	PWR
AE21	VCCAPE1	Analog	PWR
AE20	VCCAPE1	Analog	PWR
AE19	VCCAPE	Analog	PWR
AE18	VCCAPE	Analog	PWR
AE17	VCCAPE	Analog	PWR
AE16	VCCAPE	Analog	PWR
AE15	VCCAPE	Analog	PWR
AE14	VCCAPE	Analog	PWR
AE13	VCCAPE	Analog	PWR
AE12	VCCAPE	Analog	PWR
AE11	VSS	Analog	PWR
AE10	RSVD	No Connect	
AE9	VSS	Analog	PWR
AE8	RSVD	No Connect	
AE7	RSVD	No Connect	
AE6	VSS	Analog	PWR
AE5	VCCQPI0VRMTX	Analog	I/O
AE4	QPI0TPDAT[6]	Intel QPI	O
AE3	VSS	Analog	PWR
AE2	QPI0TNDAT[8]	Intel QPI	O
AE1	QPI0TPDAT[7]	Intel QPI	O
AD36	XDPDQ[8]	DDR	O
AD35	XDPDQSP[1]	DDR	I/O
AD34	VSS	Analog	PWR
AD33	TESTLO21	GPIO	I/O
AD32	NMI	GPIO	I
AD31	VSS	Analog	PWR
AD30	PEHPSDA	GPIO	I/O
AD29	SMBSDA	GPIO	I/O

Table 22-1. Pin Listing by Pin Name (Sheet 12 of 33)

Pin Name	Signal Name	Signal Buffer Type	Direction
AD28	VSS	Analog	PWR
AD27	ERR_N[0]	GPIO	O
AD26	THERMALERT_N	GPIO	O
AD25	VCCAPE1	Analog	PWR
AD24	VCCAPE1	Analog	PWR
AD23	VCCAPE1	Analog	PWR
AD22	VCCAPE1	Analog	PWR
AD21	VCCAPE1	Analog	PWR
AD20	VCCAPE1	Analog	PWR
AD19	VCCAPE	Analog	PWR
AD18	VCCAPE	Analog	PWR
AD17	VCCAPE	Analog	PWR
AD16	VCCAPE	Analog	PWR
AD15	VCCAPE	Analog	PWR
AD14	VCCAPE	Analog	PWR
AD13	VCCAPE	Analog	PWR
AD12	VCCAPE	Analog	PWR
AD11	VSS	Analog	PWR
AD10	RSVD	No Connect	
AD9	RSVD	No Connect	
AD8	RSVD	No Connect	
AD7	VSS	Analog	PWR
AD6	VCCQPI0VRMRXOP2	Analog	I/O
AD5	VCCAQPI0PLL	Analog	I/O
AD4	VSS	Analog	PWR
AD3	QPI0TNDAT[9]	Intel QPI	O
AD2	QPI0TPDAT[8]	Intel QPI	O
AD1	VSS	Analog	PWR
AC36	VSS	Analog	PWR
AC35	XDPDQSN[1]	DDR	I/O
AC34	XDPDQ[13]	DDR	I/O
AC33	VSS	Analog	PWR
AC32	TESTLO12	GPIO	I
AC31	A20M_N	GPIO	I
AC30	VSS	Analog	PWR
AC29	TESTLO23	GPIO	I/O
AC28	COREPLLPWRDET	GPIO	I
AC27	VSS	Analog	PWR
AC26	THERMTRIP_N	GPIO	I/O
AC25	RSVD	No Connect	

Table 22-1. Pin Listing by Pin Name (Sheet 13 of 33)

Pin Name	Signal Name	Signal Buffer Type	Direction
AC24	VSS	Analog	PWR
AC23	VSS	Analog	PWR
AC22	VCC	Analog	PWR
AC21	VSS	Analog	PWR
AC20	VCC	Analog	PWR
AC19	VCCAPE	Analog	PWR
AC18	VSS	Analog	PWR
AC17	VCCAPE	Analog	PWR
AC16	VSS	Analog	PWR
AC15	VCCAPE	Analog	PWR
AC14	VSS	Analog	PWR
AC13	VCCAPE	Analog	PWR
AC12	VCCAPE	Analog	PWR
AC11	VSS	Analog	PWR
AC10	VCCQPI0VRMTXOP0	Analog	I/O
AC9	RSVD	No Connect	
AC8	VSS	Analog	PWR
AC7	QPI0REFCLKN	HCSL	I
AC6	RSVD	No Connect	
AC5	VSS	Analog	PWR
AC4	RSVD	No Connect	
AC3	QPI0TPDAT[9]	Intel QPI	O
AC2	VSS	Analog	PWR
AC1	QPI0TNCLK[0]	Intel QPI	O
AB36	XDPDQ[14]	DDR	I/O
AB35	VSS	Analog	PWR
AB34	XDPDQ[15]	DDR	I/O
AB33	XDPDQ[9]	DDR	I/O
AB32	VSS	Analog	PWR
AB31	INTR	GPIO	I
AB30	TESTLO13	GPIO	I
AB29	VSS	Analog	PWR
AB28	PEHPSCL	GPIO	O
AB27	SMBSCL	GPIO	I/O
AB26	VSS	Analog	PWR
AB25	VCCMISC33	Analog	PWR
AB24	VCCMISC33	Analog	PWR
AB23	VCC	Analog	PWR
AB22	VSS	Analog	PWR
AB21	VCC	Analog	PWR

Table 22-1. Pin Listing by Pin Name (Sheet 14 of 33)

Pin Name	Signal Name	Signal Buffer Type	Direction
AB20	VSS	Analog	PWR
AB19	VCC	Analog	PWR
AB18	VSS	Analog	PWR
AB17	VCC	Analog	PWR
AB16	VSS	Analog	PWR
AB15	VCC	Analog	PWR
AB14	VSS	Analog	PWR
AB13	VSS	Analog	PWR
AB12	VSS	Analog	PWR
AB11	VSS	Analog	PWR
AB10	QPI0VRMVREF4	Cmos	I
AB9	VSS	Analog	PWR
AB8	QPI0TXBG[1]	Analog	I/O
AB7	QPI0REFCLKP	HCSL	I
AB6	VSS	Analog	PWR
AB5	QPI0TPDAT[19]	Intel QPI	O
AB4	RSVD	No Connect	
AB3	VSS	Analog	PWR
AB2	QPI0TPDAT[10]	Intel QPI	O
AB1	QPI0TPCLK[0]	Intel QPI	O
AA36	XDPDQ[10]	DDR	I/O
AA35	XDPDQSP[0]	DDR	I/O
AA34	VSS	Analog	PWR
AA33	XDPDQ[11]	DDR	I/O
AA32	RSVD	No Connect	
AA31	VSS	Analog	PWR
AA30	QPIFREQSEL1	GPIO	I
AA29	QPICKFAIL	GPIO	I
AA28	VSS	Analog	PWR
AA27	RSVD	No Connect	
AA26	TESTLO24	GPIO	I/O
AA25	VSS	Analog	PWR
AA24	VCC	Analog	PWR
AA23	VSS	Analog	PWR
AA22	VCC	Analog	PWR
AA21	VSS	Analog	PWR
AA20	VCC	Analog	PWR
AA19	VSS	Analog	PWR
AA18	VCC	Analog	PWR
AA17	VSS	Analog	PWR

Table 22-1. Pin Listing by Pin Name (Sheet 15 of 33)

Pin Name	Signal Name	Signal Buffer Type	Direction
AA16	VCC	Analog	PWR
AA15	VCCAQPI0	Analog	PWR
AA14	VCCAQPI0	Analog	PWR
AA13	VCCAQPI0	Analog	PWR
AA12	VCCAQPI0	Analog	PWR
AA11	VSS	Analog	PWR
AA10	VSS	Analog	PWR
AA9	QPI0RCOMP	Analog	I/O
AA8	QPI0TXBG[0]	Analog	I/O
AA7	VSS	Analog	PWR
AA6	QPI0TPDAT[18]	Intel QPI	O
AA5	QPI0TNDAT[19]	Intel QPI	O
AA4	VSS	Analog	PWR
AA3	QPI0TPDAT[13]	Intel QPI	O
AA2	QPI0TNDAT[10]	Intel QPI	O
AA1	VSS	Analog	PWR
Y36	VSS	Analog	PWR
Y35	XDPDQSN[0]	DDR	I/O
Y34	XDPDQ[4]	DDR	I/O
Y33	VSS	Analog	PWR
Y32	RSVD	No Connect	
Y31	XDPRDYACK_N	DDR	O
Y30	VSS	Analog	PWR
Y29	VRMEN	GPIO	I
Y28	TESTLO15	GPIO	I
Y27	VSS	Analog	PWR
Y26	VCC	Analog	PWR
Y25	VCC	Analog	PWR
Y24	VSS	Analog	PWR
Y23	VCC	Analog	PWR
Y22	VSS	Analog	PWR
Y21	VCC	Analog	PWR
Y20	VSS	Analog	PWR
Y19	VCC	Analog	PWR
Y18	VSS	Analog	PWR
Y17	VCC	Analog	PWR
Y16	VSS	Analog	PWR
Y15	VCCAQPI0	Analog	PWR
Y14	VCCAQPI0	Analog	PWR
Y13	VSS	Analog	PWR

Table 22-1. Pin Listing by Pin Name (Sheet 16 of 33)

Pin Name	Signal Name	Signal Buffer Type	Direction
Y12	VSS	Analog	PWR
Y11	VSS	Analog	PWR
Y10	RSVD	No Connect	
Y9	QPI0ICOMP	Analog	I/O
Y8	VSS	Analog	PWR
Y7	QPI0TPDAT[17]	Intel QPI	O
Y6	QPI0TNDAT[18]	Intel QPI	O
Y5	VSS	Analog	PWR
Y4	QPI0TPDAT[14]	Intel QPI	O
Y3	QPI0TNDAT[13]	Intel QPI	O
Y2	VSS	Analog	PWR
Y1	QPI0TNDAT[11]	Intel QPI	O
W36	XDPDQ[1]	DDR	I/O
W35	VSS	Analog	PWR
W34	XDPDQ[6]	DDR	I/O
W33	XDPDQ[0]	DDR	I/O
W32	VSS	Analog	PWR
W31	XDPRDYREQ_N	DDR	I
W30	RSVD	No Connect	
W29	VSS	Analog	PWR
W28	RSVD	No Connect	
W27	TESTLO16	GPIO	I
W26	VSS	Analog	PWR
W25	VSS	Analog	PWR
W24	VCC	Analog	PWR
W23	VSS	Analog	PWR
W22	VCC	Analog	PWR
W21	VSS	Analog	PWR
W20	VCC	Analog	PWR
W19	VSS	Analog	PWR
W18	VCC	Analog	PWR
W17	VSS	Analog	PWR
W16	VCC	Analog	PWR
W15	VCCAQPI0	Analog	PWR
W14	VCCAQPI0	Analog	PWR
W13	VCCAQPI0	Analog	PWR
W12	VCCAQPI0	Analog	PWR
W11	VCCAQPI0	Analog	PWR
W10	RSVD	No Connect	
W9	VSS	Analog	PWR

Table 22-1. Pin Listing by Pin Name (Sheet 17 of 33)

Pin Name	Signal Name	Signal Buffer Type	Direction
W8	QPI0TNDAT[16]	Intel QPI	O
W7	QPI0TNDAT[17]	Intel QPI	O
W6	VSS	Analog	PWR
W5	QPI0TNDAT[15]	Intel QPI	O
W4	QPI0TNDAT[14]	Intel QPI	O
W3	VSS	Analog	PWR
W2	QPI0TNDAT[12]	Intel QPI	O
W1	QPI0TPDAT[11]	Intel QPI	O
V36	XDPDQ[3]	DDR	I/O
V35	XDPDQ[5]	DDR	I/O
V34	VSS	Analog	PWR
V33	XDPDQ[2]	DDR	I/O
V32	TESTLO17	GPIO	I
V31	VSS	Analog	PWR
V30	TDO	GPIO	O
V29	VCCEPW	Analog	I/O
V28	VSS	Analog	PWR
V27	RSVD	No Connect	
V26	TDI	GPIO	I
V25	VSS	Analog	PWR
V24	VCC	Analog	PWR
V23	VCC	Analog	PWR
V22	VSS	Analog	PWR
V21	VCC	Analog	PWR
V20	VSS	Analog	PWR
V19	VCC	Analog	PWR
V18	VSS	Analog	PWR
V17	VCC	Analog	PWR
V16	VSS	Analog	PWR
V15	VCCAQPI0	Analog	PWR
V14	VCCAQPI0	Analog	PWR
V13	VSS	Analog	PWR
V12	VSS	Analog	PWR
V11	VSS	Analog	PWR
V10	VSS	Analog	PWR
V9	RSVD	No Connect	
V8	QPI0TPDAT[16]	Intel QPI	O
V7	VSS	Analog	PWR
V6	QPI0TPDAT[15]	Intel QPI	O
V5	RSVD	No Connect	

Table 22-1. Pin Listing by Pin Name (Sheet 18 of 33)

Pin Name	Signal Name	Signal Buffer Type	Direction
V4	VSS	Analog	PWR
V3	VCCQPI0VRMRXOP3	Analog	I/O
V2	QPI0TPDAT[12]	Intel QPI	O
V1	VSS	Analog	PWR
U36	VSS	Analog	PWR
U35	XDPDQ[7]	DDR	I/O
U34	CLCLK	Cmos	I/O
U33	VSS	Analog	PWR
U32	CLRST_N	Cmos	I
U31	TMS	GPIO	I
U30	VSS	Analog	PWR
U29	DDRFREQ[2]	GPIO	I
U28	TESTHI[2]	GPIO	I
U27	VSS	Analog	PWR
U26	VCCXDP18	Analog	PWR
U25	VTTXDP	Analog	PWR
U24	VSS	Analog	PWR
U23	VSS	Analog	PWR
U22	VCC	Analog	PWR
U21	VSS	Analog	PWR
U20	VCC	Analog	PWR
U19	VSS	Analog	PWR
U18	VCC	Analog	PWR
U17	VSS	Analog	PWR
U16	VCC	Analog	PWR
U15	VCCAQPI0	Analog	PWR
U14	VCCAQPI0	Analog	PWR
U13	VCCAQPI0	Analog	PWR
U12	VCCAQPI0	Analog	PWR
U11	VCCAQPI0	Analog	PWR
U10	RSVD	No Connect	
U9	RSVD	No Connect	
U8	RSVD	No Connect	
U7	VSS	Analog	PWR
U6	RSVD	No Connect	
U5	QPI0RPDAT[16]	Intel QPI	I
U4	VSS	Analog	PWR
U3	QPI0VRMVREF3	Cmos	I
U2	VCCAQPI0TXBG	Analog	I/O
U1	VSS	Analog	PWR

Table 22-1. Pin Listing by Pin Name (Sheet 19 of 33)

Pin Name	Signal Name	Signal Buffer Type	Direction
T36	VREFCL	Cmos	I/O
T35	VSS	Analog	PWR
T34	CLDATA	Cmos	I/O
T33	TCK	GPIO	I
T32	VSS	Analog	PWR
T31	DDRFREQ[3]	GPIO	I
T30	PEWIDTH[1]	GPIO	I/O
T29	VSS	Analog	PWR
T28	PEWIDTH[4]	GPIO	I/O
T27	TESTLO18	GPIO	I
T26	VSS	Analog	PWR
T25	VCCXDP18	Analog	PWR
T24	VCCEPW	Analog	PWR
T23	VCCEPW	Analog	PWR
T22	VSS	Analog	PWR
T21	VCCEPW	Analog	PWR
T20	VSS	Analog	PWR
T19	VCC	Analog	PWR
T18	VSS	Analog	PWR
T17	VCC	Analog	PWR
T16	VSS	Analog	PWR
T15	VCCAQPI0	Analog	PWR
T14	VCCAQPI0	Analog	PWR
T13	VSS	Analog	PWR
T12	VSS	Analog	PWR
T11	VSS	Analog	PWR
T10	RSVD	No Connect	
T9	VSS	Analog	PWR
T8	RSVD	No Connect	
T7	QPI0RPDAT[18]	Intel QPI	I
T6	VSS	Analog	PWR
T5	QPI0RNDAT[16]	Intel QPI	I
T4	QPI0RPDAT[15]	Intel QPI	I
T3	VSS	Analog	PWR
T2	QPI0VRMVREF2	Cmos	I
T1	QPI0RNDAT[13]	Intel QPI	I
R36	PEWIDTH[2]	GPIO	I/O
R35	TESTLO19	GPIO	I/O
R34	VSS	Analog	PWR
R33	PEWIDTH[0]	GPIO	I/O

Table 22-1. Pin Listing by Pin Name (Sheet 20 of 33)

Pin Name	Signal Name	Signal Buffer Type	Direction
R32	LEGACYIOH	GPIO	I/O
R31	VSS	Analog	PWR
R30	TRST_N	GPIO	I
R29	TESTHI[3]	GPIO	I
R28	VSS	Analog	PWR
R27	VCCCLPWRP	Analog	I/O
R26	VCCEPW	Analog	PWR
R25	VSS	Analog	PWR
R24	VTTDDR	Analog	PWR
R23	VSS	Analog	PWR
R22	VCCEPW	Analog	PWR
R21	VSS	Analog	PWR
R20	VCC	Analog	PWR
R19	VSS	Analog	PWR
R18	VCC	Analog	PWR
R17	VSS	Analog	PWR
R16	VCC	Analog	PWR
R15	VSS	Analog	PWR
R14	VCCAQPI0	Analog	PWR
R13	VCCAQPI0	Analog	PWR
R12	VCCAQPI0	Analog	PWR
R11	VSS	Analog	PWR
R10	VSS	Analog	PWR
R9	RSVD	No Connect	
R8	VSS	Analog	PWR
R7	QPI0RNDAT[18]	Intel QPI	I
R6	QPI0RPDAT[19]	Intel QPI	I
R5	VSS	Analog	PWR
R4	QPI0RNDAT[15]	Intel QPI	I
R3	QPI0RPDAT[14]	Intel QPI	I
R2	VSS	Analog	PWR
R1	QPI0RPDAT[13]	Intel QPI	I
P36	VSS	Analog	PWR
P35	DDRD[1]	DDR	I/O
P34	DDRD[3]	DDR	I/O
P33	VSS	Analog	PWR
P32	DDRD[7]	DDR	I/O
P31	DUALIOH	GPIO	I/O
P30	VSS	Analog	PWR
P29	FWAGNT_ESIMODE	GPIO	I

Table 22-1. Pin Listing by Pin Name (Sheet 21 of 33)

Pin Name	Signal Name	Signal Buffer Type	Direction
P28	PEWIDTH[5]	GPIO	I/O
P27	VSS	Analog	PWR
P26	VCCDDR18	Analog	PWR
P25	VCCDDR18	Analog	PWR
P24	VSS	Analog	PWR
P23	VCCDDR18	Analog	PWR
P22	VSS	Analog	PWR
P21	VCCEPW	Analog	PWR
P20	VSS	Analog	PWR
P19	VCC	Analog	PWR
P18	VSS	Analog	PWR
P17	VCC	Analog	PWR
P16	VSS	Analog	PWR
P15	VCC	Analog	PWR
P14	VSS	Analog	PWR
P13	VCCAQPI0	Analog	PWR
P12	VCCAQPI0	Analog	PWR
P11	VSS	Analog	PWR
P10	RSVD	No Connect	
P9	RSVD	No Connect	
P8	RSVD	No Connect	
P7	VSS	Analog	PWR
P6	QPI0RNDAT[19]	Intel QPI	I
P5	QPI0RNDAT[17]	Intel QPI	I
P4	VSS	Analog	PWR
P3	QPI0RNDAT[14]	Intel QPI	I
P2	QPI0RPDAT[12]	Intel QPI	I
P1	VSS	Analog	PWR
N36	VCCADDRPLL	Analog	PWR
N35	VSS	Analog	PWR
N34	DDRD[2]	DDR	I/O
N33	DDRD[5]	DDR	I/O
N32	VSS	Analog	PWR
N31	DDREDQSN	DDR	O
N30	DDREDQSP	DDR	O
N29	VSS	Analog	PWR
N28	PEWIDTH[3]	GPIO	I/O
N27	ME_CLK_SRC	GPIO	I
N26	VSS	Analog	PWR
N25	VCCDDR18	Analog	PWR

Table 22-1. Pin Listing by Pin Name (Sheet 22 of 33)

Pin Name	Signal Name	Signal Buffer Type	Direction
N24	VCCDDR18	Analog	PWR
N23	VSS	Analog	PWR
N22	VCCEPW	Analog	PWR
N21	VSS	Analog	PWR
N20	VSS	Analog	PWR
N19	VCCAQPI1	Analog	PWR
N18	VCCAQPI1	Analog	PWR
N17	VCCAQPI1	Analog	PWR
N16	VCCAQPI1	Analog	PWR
N15	VCCAQPI1	Analog	PWR
N14	VCCAQPI1	Analog	PWR
N13	VCCAQPI1	Analog	PWR
N12	VCCAQPI0	Analog	PWR
N11	RSVD	No Connect	
N10	VSS	Analog	PWR
N9	VSS	Analog	PWR
N8	RSVD	No Connect	
N7	QPI0RXBG[0]	Analog	I/O
N6	VSS	Analog	PWR
N5	QPI0RPDAT[17]	Intel QPI	I
N4	VCCQPI0VRMRXOP0	Analog	I/O
N3	VSS	Analog	PWR
N2	QPI0RNDAT[12]	Intel QPI	I
N1	QPI0RNDAT[10]	Intel QPI	I
M36	DDRD[4]	DDR	I/O
M35	DDRDM	DDR	O
M34	VSS	Analog	PWR
M33	DDRDM_N	DDR	O
M32	DDRD[0]	DDR	I/O
M31	VSS	Analog	PWR
M30	DDRD[6]	DDR	I/O
M29	DDRDRVCRES	Analog	I/O
M28	VSS	Analog	PWR
M27	DDRRES[0]	Analog	I/O
M26	VCCDDR18	Analog	PWR
M25	VSS	Analog	PWR
M24	VCCDDR18	Analog	PWR
M23	VCCDDR18	Analog	PWR
M22	VSS	Analog	PWR
M21	VCCMISC33EPW	Analog	PWR

Table 22-1. Pin Listing by Pin Name (Sheet 23 of 33)

Pin Name	Signal Name	Signal Buffer Type	Direction
M20	VCCAQPI1	Analog	PWR
M19	VCCAQPI1	Analog	PWR
M18	VCCAQPI1	Analog	PWR
M17	VCCAQPI1	Analog	PWR
M16	VCCAQPI1	Analog	PWR
M15	VCCAQPI1	Analog	PWR
M14	VCCAQPI1	Analog	PWR
M13	VCCAQPI1	Analog	PWR
M12	VCCAQPI1	Analog	PWR
M11	QPI0VRMVREF1	Cmos	I
M10	VSS	Analog	PWR
M9	RSVD	No Connect	
M8	VSS	Analog	PWR
M7	QPI0RXBG[1]	Analog	I/O
M6	VCCQPI0VRMRXOP1	Analog	I/O
M5	VSS	Analog	PWR
M4	RSVD	No Connect	
M3	QPI0RPDAT[11]	Intel QPI	I
M2	VSS	Analog	PWR
M1	QPI0RPDAT[10]	Intel QPI	I
L36	VSS	Analog	PWR
L35	RSVD	No Connect	
L34	RSVD	No Connect	
L33	VSS	Analog	PWR
L32	RSVD	No Connect	
L31	RSVD	No Connect	
L30	VSS	Analog	PWR
L29	DDRCRES	Analog	I/O
L28	DDRSLEWCRES	Analog	I/O
L27	VSS	Analog	PWR
L26	RSVD	No Connect	
L25	VCCDDR18	Analog	PWR
L24	VSS	Analog	PWR
L23	VSS	Analog	PWR
L22	VCCEPW	Analog	PWR
L21	VSS	Analog	PWR
L20	VCCAQPI1	Analog	PWR
L19	VCCAQPI1	Analog	PWR
L18	VSS	Analog	PWR
L17	VCCAQPI1	Analog	PWR

Table 22-1. Pin Listing by Pin Name (Sheet 24 of 33)

Pin Name	Signal Name	Signal Buffer Type	Direction
L16	VSS	Analog	PWR
L15	VCCAQPI1	Analog	PWR
L14	VSS	Analog	PWR
L13	VCCAQPI1	Analog	PWR
L12	VSS	Analog	PWR
L11	VSS	Analog	PWR
L10	QPI0VRMVREF0	Cmos	I
L9	RSVD	No Connect	
L8	QPI0RPDAT[0]	Intel QPI	I
L7	VSS	Analog	PWR
L6	RSVD	No Connect	
L5	QPI0RNCLK[0]	Intel QPI	I
L4	VSS	Analog	PWR
L3	QPI0RNDAT[11]	Intel QPI	I
L2	RSVD	No Connect	
L1	VSS	Analog	PWR
K36	DDRBA[1]	DDR	O
K35	VSS	Analog	PWR
K34	DDRCLKN	DDR	O
K33	DDRCLKP	DDR	O
K32	VSS	Analog	PWR
K31	DDRBA[2]	DDR	O
K30	DDRRES[1]	Analog	I/O
K29	VSS	Analog	PWR
K28	DDRCOMPX	Analog	I/O
K27	RSVD	No Connect	
K26	VSS	Analog	PWR
K25	RSVD	No Connect	
K24	RSVD	No Connect	
K23	VCCEPW	Analog	PWR
K22	VCCEPW	Analog	PWR
K21	VCCMISC33EPW	Analog	PWR
K20	VCCMISC33EPW	Analog	PWR
K19	VCCAQPI1	Analog	PWR
K18	VSS	Analog	PWR
K17	VCCAQPI1	Analog	PWR
K16	VSS	Analog	PWR
K15	VCCAQPI1	Analog	PWR
K14	VSS	Analog	PWR
K13	RSVD	No Connect	

Table 22-1. Pin Listing by Pin Name (Sheet 25 of 33)

Pin Name	Signal Name	Signal Buffer Type	Direction
K12	RSVD	No Connect	
K11	QPI1VRMVREFTX	Cmos	I
K10	VCCQPI1VRMTXOP0	Analog	I/O
K9	VSS	Analog	PWR
K8	QPI0RNDAT[0]	Intel QPI	I
K7	QPI0RPDAT[1]	Intel QPI	I
K6	VSS	Analog	PWR
K5	QPI0RPCLK[0]	Intel QPI	I
K4	QPI0RPDAT[4]	Intel QPI	I
K3	VSS	Analog	PWR
K2	RSVD	No Connect	
K1	QPI0RNDAT[9]	Intel QPI	I
J36	DDRA[14]	DDR	O
J35	DDRA[12]	DDR	O
J34	VSS	Analog	PWR
J33	DDRBA[0]	DDR	O
J32	DDRA[13]	DDR	O
J31	VSS	Analog	PWR
J30	DDRA[2]	DDR	O
J29	DDRA[7]	DDR	O
J28	VSS	Analog	PWR
J27	RMIITXD[1]	GPIO	O
J26	RMIICLKREFOUT	GPIO	O
J25	VSS	Analog	PWR
J24	RSVD	No Connect	
J23	QPI1VRMVREFRX0	Cmos	I
J22	VSS	Analog	PWR
J21	RSVD	No Connect	
J20	VSS	Analog	PWR
J19	RSVD	No Connect	
J18	VSS	Analog	PWR
J17	VSS	Analog	PWR
J16	RSVD	No Connect	
J15	VSS	Analog	PWR
J14	QPI1ICOMP	Analog	I/O
J13	QPI1RCOMP	Analog	I/O
J12	VSS	Analog	PWR
J11	RSVD	No Connect	
J10	RSVD	No Connect	
J9	VSS	Analog	PWR

Table 22-1. Pin Listing by Pin Name (Sheet 26 of 33)

Pin Name	Signal Name	Signal Buffer Type	Direction
J8	VSS	Analog	PWR
J7	QPI0RNDAT[1]	Intel QPI	I
J6	QPI0RPDAT[2]	Intel QPI	I
J5	VSS	Analog	PWR
J4	QPI0RNDAT[4]	Intel QPI	I
J3	QPI0RNDAT[8]	Intel QPI	I
J2	VSS	Analog	PWR
J1	QPI0RPDAT[9]	Intel QPI	I
H36	VSS	Analog	PWR
H35	RSVD	No Connect	
H34	RSVD	No Connect	
H33	VSS	Analog	PWR
H32	DDRA[4]	DDR	O
H31	DDRA[5]	DDR	O
H30	VSS	Analog	PWR
H29	DDRA[11]	DDR	O
H28	DDRCAS_N	DDR	O
H27	VSS	Analog	PWR
H26	QPI1VRMVREFRX1	Cmos	I
H25	VSS	Analog	PWR
H24	QPI1RNDAT[0]	Intel QPI	I
H23	QPI1RPDAT[0]	Intel QPI	I
H22	VSS	Analog	PWR
H21	RSVD	No Connect	
H20	RSVD	No Connect	
H19	VSS	Analog	PWR
H18	RSVD	No Connect	
H17	RSVD	No Connect	
H16	QPI1TPDAT[16]	Intel QPI	O
H15	QPI1TNDAT[16]	Intel QPI	O
H14	VSS	Analog	PWR
H13	QPI1TXBG[0]	Analog	I/O
H12	QPI1TXBG[1]	Analog	I/O
H11	VSS	Analog	PWR
H10	RSVD	No Connect	
H9	RSVD	No Connect	
H8	VSS	Analog	PWR
H7	VSS	Analog	PWR
H6	QPI0RNDAT[2]	Intel QPI	I
H5	QPI0RPDAT[3]	Intel QPI	I

Table 22-1. Pin Listing by Pin Name (Sheet 27 of 33)

Pin Name	Signal Name	Signal Buffer Type	Direction
H4	VSS	Analog	PWR
H3	QPI0RPDAT[8]	Intel QPI	I
H2	QPI0RNDAT[7]	Intel QPI	I
H1	VSS	Analog	PWR
G36	DDRA[1]	DDR	O
G35	VSS	Analog	PWR
G34	DDRPLLREFCLKN	DDR	I
G33	DDRPLLREFCLKP	DDR	O
G32	VSS	Analog	PWR
G31	DDRA[8]	DDR	O
G30	DDRA[10]	DDR	O
G29	VSS	Analog	PWR
G28	RMIICLK	GPIO	I
G27	RMIITXEN	GPIO	O
G26	VSS	Analog	PWR
G25	QPI1RNDAT[1]	Intel QPI	I
G24	QPI1RPDAT[1]	Intel QPI	I
G23	VSS	Analog	PWR
G22	QPI1RXBG[1]	Analog	I/O
G21	QPI1RXBG[0]	Analog	I/O
G20	VSS	Analog	PWR
G19	QPI1RNDAT[18]	Intel QPI	I
G18	QPI1RPDAT[18]	Intel QPI	I
G17	VSS	Analog	PWR
G16	VSS	Analog	PWR
G15	QPI1TNDAT[17]	Intel QPI	O
G14	QPI1TPDAT[17]	Intel QPI	O
G13	VSS	Analog	PWR
G12	QPI1REFCLKP	HCSL	I
G11	QPI1REFCLKN	HCSL	I
G10	VSS	Analog	PWR
G9	RSVD	No Connect	
G8	RSVD	No Connect	
G7	VSS	Analog	PWR
G6	VSS	Analog	PWR
G5	QPI0RNDAT[3]	Intel QPI	I
G4	QPI0RNDAT[5]	Intel QPI	I
G3	VSS	Analog	PWR
G2	QPI0RPDAT[7]	Intel QPI	I
G1	QPI0RNDAT[6]	Intel QPI	I

Table 22-1. Pin Listing by Pin Name (Sheet 28 of 33)

Pin Name	Signal Name	Signal Buffer Type	Direction
F36	DDRA[0]	DDR	O
F35	DDRA[3]	DDR	O
F34	VSS	Analog	PWR
F33	DDRA[9]	DDR	O
F32	DDRWE_N	DDR	O
F31	VSS	Analog	PWR
F30	DDRODT	DDR	O
F29	DDRRAS_N	DDR	O
F28	VSS	Analog	PWR
F27	VSS	Analog	PWR
F26	QPI1RNDAT[2]	Intel QPI	I
F25	QPI1RPDAT[2]	Intel QPI	I
F24	VSS	Analog	PWR
F23	RSVD	No Connect	
F22	VCCQPI1VRMRXOP1	Analog	I/O
F21	VSS	Analog	PWR
F20	QPI1RNDAT[19]	Intel QPI	I
F19	QPI1RPDAT[19]	Intel QPI	I
F18	VSS	Analog	PWR
F17	RSVD	No Connect	
F16	QPI1TPDAT[15]	Intel QPI	O
F15	VSS	Analog	PWR
F14	QPI1TNDAT[18]	Intel QPI	O
F13	QPI1TPDAT[18]	Intel QPI	O
F12	VSS	Analog	PWR
F11	RSVD	No Connect	
F10	VCCQPI1VRMRXOP2	Analog	I/O
F9	VSS	Analog	PWR
F8	QPI1TPDAT[0]	Intel QPI	O
F7	QPI1TNDAT[0]	Intel QPI	O
F6	VSS	Analog	PWR
F5	VSS	Analog	PWR
F4	QPI0RPDAT[5]	Intel QPI	I
F3	VCCQPI0VRMRX2	Analog	I/O
F2	VSS	Analog	PWR
F1	QPI0RPDAT[6]	Intel QPI	I
E36	VSS	Analog	PWR
E35	DDRA[6]	DDR	O
E34	DDRCS_N	DDR	O
E33	VSS	Analog	PWR

Table 22-1. Pin Listing by Pin Name (Sheet 29 of 33)

Pin Name	Signal Name	Signal Buffer Type	Direction
E32	DDRCKE	DDR	O
E31	RMIITXD[0]	GPIO	O
E30	VSS	Analog	PWR
E29	RMIIRXD[1]	GPIO	I
E28	VSS	Analog	PWR
E27	QPI1RNDAT[3]	Intel QPI	I
E26	QPI1RPDAT[3]	Intel QPI	I
E25	VSS	Analog	PWR
E24	QPI1RPCLK[0]	Intel QPI	I
E23	QPI1RNCLK[0]	Intel QPI	I
E22	VSS	Analog	PWR
E21	QPI1RPDAT[17]	Intel QPI	I
E20	QPI1RNDAT[17]	Intel QPI	I
E19	VSS	Analog	PWR
E18	QPI1RNDAT[16]	Intel QPI	I
E17	QPI1RPDAT[16]	Intel QPI	I
E16	RSVD	No Connect	
E15	QPI1TNDAT[15]	Intel QPI	I
E14	VSS	Analog	PWR
E13	QPI1TNDAT[19]	Intel QPI	O
E12	QPI1TPDAT[19]	Intel QPI	O
E11	VSS	Analog	PWR
E10	VCCAQPI1PLL	Analog	PWR
E9	VCCQPI1VRMTX	Analog	I/O
E8	VSS	Analog	PWR
E7	QPI1TNDAT[1]	Intel QPI	O
E6	QPI1TPDAT[1]	Intel QPI	O
E5	VSS	Analog	PWR
E4	VSS	Analog	PWR
E3	VCCQPI0VRMRX1	Analog	I/O
E2	VCCQPI0VRMRX3	Analog	I/O
E1	VSS	Analog	PWR
D36	TESTLO26	GPIO	I/O
D35	VSS	Analog	PWR
D34	COREPWRGOOD	GPIO	I
D33	CORERST_N	GPIO	I
D32	VSS	Analog	PWR
D31	RMIIMDIO	GPIO	I/O
D30	RMIIMDC	GPIO	O
D29	VSS	Analog	PWR

Table 22-1. Pin Listing by Pin Name (Sheet 30 of 33)

Pin Name	Signal Name	Signal Buffer Type	Direction
D28	QPI1RPDAT[5]	Intel QPI	I
D27	QPI1RNDAT[5]	Intel QPI	I
D26	VSS	Analog	PWR
D25	QPI1RNDAT[4]	Intel QPI	I
D24	QPI1RPDAT[4]	Intel QPI	I
D23	VSS	Analog	PWR
D22	RSVD	No Connect	
D21	VCCQPI1VRMRXOP0	Analog	I/O
D20	VSS	Analog	PWR
D19	QPI1RNDAT[15]	Intel QPI	I
D18	QPI1RPDAT[15]	Intel QPI	I
D17	VSS	Analog	PWR
D16	VSS	Analog	PWR
D15	QPI1TNDAT[14]	Intel QPI	O
D14	QPI1TPDAT[14]	Intel QPI	O
D13	VSS	Analog	PWR
D12	RSVD	No Connect	
D11	RSVD	No Connect	
D10	VSS	Analog	PWR
D9	QPI1TPDAT[6]	Intel QPI	O
D8	QPI1TNDAT[6]	Intel QPI	O
D7	VSS	Analog	PWR
D6	QPI1TPDAT[2]	Intel QPI	O
D5	QPI1TNDAT[2]	Intel QPI	O
D4	VSS	Analog	PWR
D3	VSS	Analog	PWR
D2	VCCQPI0VRMRX0	Analog	I/O
D1	VCCAQPI0RXBG	Analog	I/O
C36	VSS	Analog	PWR
C35	PLLPWRDET	GPIO	I
C34	VSS	Analog	PWR
C33	TESTLO22	GPIO	I/O
C32	AUXPWRGOOD	GPIO	I
C31	VSS	Analog	PWR
C30	VSS	Analog	PWR
C29	VCCQPI1VRMRX1	Analog	I/O
C28	VCCQPI1VRMRX2	Analog	I/O
C27	VSS	Analog	PWR
C26	QPI1RPDAT[8]	Intel QPI	I
C25	QPI1RNDAT[8]	Intel QPI	I

Table 22-1. Pin Listing by Pin Name (Sheet 31 of 33)

Pin Name	Signal Name	Signal Buffer Type	Direction
C24	VSS	Analog	PWR
C23	QPI1RNDAT[11]	Intel QPI	I
C22	QPI1RPDAT[11]	Intel QPI	I
C21	VSS	Analog	PWR
C20	QPI1RNDAT[14]	Intel QPI	I
C19	QPI1RPDAT[14]	Intel QPI	I
C18	VSS	Analog	PWR
C17	QPI1VRMVREFRX3	Cmos	I
C16	VCCQPI1VRMRXOP3	Analog	I/O
C15	VSS	Analog	PWR
C14	QPI1TNDAT[13]	Intel QPI	O
C13	QPI1TPDAT[13]	Intel QPI	O
C12	VSS	Analog	PWR
C11	QPI1TPDAT[9]	Intel QPI	O
C10	QPI1TNDAT[9]	Intel QPI	O
C9	VSS	Analog	PWR
C8	QPI1TPDAT[3]	Intel QPI	O
C7	QPI1TNDAT[3]	Intel QPI	O
C6	VSS	Analog	PWR
C5	RSVD	No Connect	
C4	RSVD	No Connect	
C3	VSS	Analog	PWR
C2	VSS	Analog	PWR
C1	VSS	Analog	PWR
B36	VSS	Analog	PWR
B35	VSS	Analog	PWR
B34	VSS	Analog	PWR
B33	VSS	Analog	PWR
B32	RMIIRXD[0]	GPIO	I
B31	VSS	Analog	PWR
B30	VCCQPI1VRMRX0	Analog	I/O
B29	VCCQPI1VRMRX3	Analog	I/O
B28	VSS	Analog	PWR
B27	QPI1RPDAT[7]	Intel QPI	I
B26	QPI1RNDAT[7]	Intel QPI	I
B25	VSS	Analog	PWR
B24	RSVD	No Connect	
B23	RSVD	No Connect	
B22	VSS	Analog	PWR
B21	QPI1RNDAT[12]	Intel QPI	I

Table 22-1. Pin Listing by Pin Name (Sheet 32 of 33)

Pin Name	Signal Name	Signal Buffer Type	Direction
B20	QPI1RPDAT[12]	Intel QPI	I
B19	VSS	Analog	PWR
B18	QPI1VRMVREFRX2	Cmos	I
B17	VCCAQPI1TXBG	Analog	I/O
B16	QPI1TPDAT[12]	Intel QPI	O
B15	QPI1TNDAT[12]	Intel QPI	O
B14	VSS	Analog	PWR
B13	QPI1TNDAT[10]	Intel QPI	O
B12	QPI1TPDAT[10]	Intel QPI	O
B11	VSS	Analog	PWR
B10	QPI1TPDAT[8]	Intel QPI	O
B9	QPI1TNDAT[8]	Intel QPI	O
B8	VSS	Analog	PWR
B7	QPI1TPDAT[5]	Intel QPI	O
B6	QPI1TNDAT[5]	Intel QPI	O
B5	VSS	Analog	PWR
B4	RSVD	No Connect	
B3	VSS	Analog	PWR
B2	VSS	Analog	PWR
B1	TEST[2]	No Connect	I/O
A36	TEST[1]	No Connect	I/O
A35	VSS	Analog	PWR
A34	VSS	Analog	PWR
A33	VSS	Analog	PWR
A32	VSS	Analog	PWR
A31	RMIICRSDV	GPIO	I
A30	VCCAQPI1RXBG	Analog	I/O
A29	VSS	Analog	PWR
A28	QPI1RPDAT[6]	Intel QPI	I
A27	QPI1RNDAT[6]	Intel QPI	I
A26	VSS	Analog	PWR
A25	QPI1RPDAT[9]	Intel QPI	I
A24	QPI1RNDAT[9]	Intel QPI	I
A23	VSS	Analog	PWR
A22	QPI1RPDAT[10]	Intel QPI	I
A21	QPI1RNDAT[10]	Intel QPI	I
A20	VSS	Analog	PWR
A19	QPI1RPDAT[13]	Intel QPI	I
A18	QPI1RNDAT[13]	Intel QPI	I
A17	VSS	Analog	PWR

Table 22-1. Pin Listing by Pin Name (Sheet 33 of 33)

Pin Name	Signal Name	Signal Buffer Type	Direction
A16	VSS	Analog	PWR
A15	QPI1TPDAT[11]	Intel QPI	O
A14	QPI1TNDAT[11]	Intel QPI	O
A13	VSS	Analog	PWR
A12	QPI1TPCLK[0]	Intel QPI	O
A11	QPI1TNCLK[0]	Intel QPI	O
A10	VSS	Analog	PWR
A9	QPI1TPDAT[7]	Intel QPI	O
A8	QPI1TNDAT[7]	Intel QPI	O
A7	VSS	Analog	PWR
A6	QPI1TPDAT[4]	Intel QPI	O
A5	QPI1TNDAT[4]	Intel QPI	O
A4	VSS	Analog	PWR
A3	VSS	Analog	PWR
A2	TEST[0]	No Connect	I/O

Table 22-2. Pin Listing by Signal Name (Sheet 1 of 33)

Pin Name	Signal Name	Signal Buffer Type	Direction
AH2	QPI0TNDAT[5]	Intel QPI	O
AC31	A20M_N	GPIO	I
C32	AUXPWRGOOD	GPIO	I
AF31	BMCINIT	GPIO	I
U34	CLCLK	Cmos	I/O
T34	CLDATA	Cmos	I/O
U32	CLRST_N	Cmos	I
AC28	COREPLLPWRDET	GPIO	I
D34	COREPWRGOOD	GPIO	I
D33	CORERST_N	GPIO	I
F36	DDRA[0]	DDR	O
G36	DDRA[1]	DDR	O
G30	DDRA[10]	DDR	O
H29	DDRA[11]	DDR	O
J35	DDRA[12]	DDR	O
J32	DDRA[13]	DDR	O
J36	DDRA[14]	DDR	O
J30	DDRA[2]	DDR	O
F35	DDRA[3]	DDR	O
H32	DDRA[4]	DDR	O
H31	DDRA[5]	DDR	O
E35	DDRA[6]	DDR	O
J29	DDRA[7]	DDR	O
G31	DDRA[8]	DDR	O
F33	DDRA[9]	DDR	O
J33	DDRBA[0]	DDR	O
K36	DDRBA[1]	DDR	O
K31	DDRBA[2]	DDR	O
H28	DDRCAS_N	DDR	O
E32	DDRCKE	DDR	O
K34	DDRCLKN	DDR	O
K33	DDRCLKP	DDR	O
K28	DDRCOMPX	Analog	I/O
L29	DDRCRES	Analog	I/O
E34	DDRCS_N	DDR	O
M32	DDRD[0]	DDR	I/O
P35	DDRD[1]	DDR	I/O
N34	DDRD[2]	DDR	I/O
P34	DDRD[3]	DDR	I/O
M36	DDRD[4]	DDR	I/O

Table 22-2. Pin Listing by Signal Name (Sheet 2 of 33)

Pin Name	Signal Name	Signal Buffer Type	Direction
N33	DDRD[5]	DDR	I/O
M30	DDRD[6]	DDR	I/O
P32	DDRD[7]	DDR	I/O
M35	DDRDM	DDR	O
M33	DDRDM_N	DDR	O
M29	DDRDRVCRES	Analog	I/O
N31	DDREDQSN	DDR	O
N30	DDREDQSP	DDR	O
U29	DDRFREQ[2]	GPIO	I
T31	DDRFREQ[3]	GPIO	I
F30	DDRODT	DDR	O
G34	DDRPLLREFCLKN	DDR	I
G33	DDRPLLREFCLKP	DDR	O
F29	DDRRAS_N	DDR	O
M27	DDRRES[0]	Analog	I/O
K30	DDRRES[1]	Analog	I/O
L28	DDRSLEWCRES	Analog	I/O
F32	DDRWE_N	DDR	O
P31	DUALIOH	GPIO	I/O
AG33	DUALIOH_QPIPRTSEL	GPIO	I
AD27	ERR_N[0]	GPIO	O
AF28	ERR_N[1]	GPIO	O
AE28	ERR_N[2]	GPIO	O
AL18	ESIRN[0]	PCIEX	I
AL20	ESIRN[1]	PCIEX	I
AK21	ESIRN[2]	PCIEX	I
AJ19	ESIRN[3]	PCIEX	I
AL19	ESIRP[0]	PCIEX	I
AK20	ESIRP[1]	PCIEX	I
AJ21	ESIRP[2]	PCIEX	I
AK19	ESIRP[3]	PCIEX	I
AR19	ESITN[0]	PCIEX	O
AN20	ESITN[1]	PCIEX	O
AR20	ESITN[2]	PCIEX	O
AN21	ESITN[3]	PCIEX	O
AP19	ESITP[0]	PCIEX	O
AN19	ESITP[1]	PCIEX	O
AR21	ESITP[2]	PCIEX	O
AM21	ESITP[3]	PCIEX	O
AK36	EXTSYSTRIG	GPIO	I/O

Table 22-2. Pin Listing by Signal Name (Sheet 3 of 33)

Pin Name	Signal Name	Signal Buffer Type	Direction
AL36	FERR_N	GPIO	O
AE30	INIT_N	GPIO	I
AB31	INTR	GPIO	I
R32	LEGACYIOH	GPIO	I/O
AE27	LTRESET_N	GPIO	O
N27	ME_CLK_SRC	GPIO	I
AD32	NMI	GPIO	I
AN10	PE0CLKN	HCSL	I
AN11	PE0CLKP	HCSL	I
AP3	PE0ICOMPI	Analog	I/O
AL1	PE0ICOMPO	Analog	I/O
AT12	PE0JCLKN	HCSL	I
AT13	PE0JCLKP	HCSL	I
AN13	PE0RBIAS	Analog	I/O
AM1	PE0RCOMPO	Analog	I/O
AK33	PE10RN[0]	PCIEX2	I
AL34	PE10RN[1]	PCIEX2	I
AK32	PE10RN[2]	PCIEX2	I
AH30	PE10RN[3]	PCIEX2	I
AL33	PE10RP[0]	PCIEX2	I
AM34	PE10RP[1]	PCIEX2	I
AJ32	PE10RP[2]	PCIEX2	I
AJ30	PE10RP[3]	PCIEX2	I
AT32	PE10TN[0]	PCIEX2	O
AR31	PE10TN[1]	PCIEX2	O
AP33	PE10TN[2]	PCIEX2	O
AN32	PE10TN[3]	PCIEX2	O
AT31	PE10TP[0]	PCIEX2	O
AP31	PE10TP[1]	PCIEX2	O
AR33	PE10TP[2]	PCIEX2	O
AP32	PE10TP[3]	PCIEX2	O
AG29	PE1CLKN	HCSL	I
AF29	PE1CLKP	HCSL	I
AN35	PE1ICOMPI	Analog	I/O
AN36	PE1ICOMPO	Analog	I/O
AM30	PE1JCLKN	HCSL	I
AM29	PE1JCLKP	HCSL	I
AN34	PE1RBIAS	Analog	I/O
AP35	PE1RCOMPO	Analog	I/O
AJ16	PE1RN[0]	PCIEX2	I

Table 22-2. Pin Listing by Signal Name (Sheet 4 of 33)

Pin Name	Signal Name	Signal Buffer Type	Direction
AJ18	PE1RN[1]	PCIEX2	I
AK16	PE1RP[0]	PCIEX2	I
AJ17	PE1RP[1]	PCIEX2	I
AP16	PE1TN[0]	PCIEX2	O
AR16	PE1TN[1]	PCIEX2	O
AN16	PE1TP[0]	PCIEX2	O
AR15	PE1TP[1]	PCIEX2	O
AL17	PE2RN[0]	PCIEX2	I
AM17	PE2RN[1]	PCIEX2	I
AK17	PE2RP[0]	PCIEX2	I
AM18	PE2RP[1]	PCIEX2	I
AP18	PE2TN[0]	PCIEX2	O
AR17	PE2TN[1]	PCIEX2	O
AP17	PE2TP[0]	PCIEX2	O
AT17	PE2TP[1]	PCIEX2	O
AJ6	PE3RN[0]	PCIEX2	I
AL4	PE3RN[1]	PCIEX2	I
AL5	PE3RN[2]	PCIEX2	I
AK7	PE3RN[3]	PCIEX2	I
AK6	PE3RP[0]	PCIEX2	I
AL3	PE3RP[1]	PCIEX2	I
AK5	PE3RP[2]	PCIEX2	I
AL7	PE3RP[3]	PCIEX2	I
AN4	PE3TN[0]	PCIEX2	O
AR4	PE3TN[1]	PCIEX2	O
AP6	PE3TN[2]	PCIEX2	O
AT5	PE3TN[3]	PCIEX2	O
AN5	PE3TP[0]	PCIEX2	O
AP4	PE3TP[1]	PCIEX2	O
AN6	PE3TP[2]	PCIEX2	O
AT4	PE3TP[3]	PCIEX2	O
AJ7	PE4RN[0]	PCIEX2	I
AM7	PE4RN[1]	PCIEX2	I
AL8	PE4RN[2]	PCIEX2	I
AJ9	PE4RN[3]	PCIEX2	I
AJ8	PE4RP[0]	PCIEX2	I
AM8	PE4RP[1]	PCIEX2	I
AL9	PE4RP[2]	PCIEX2	I
AK9	PE4RP[3]	PCIEX2	I
AR5	PE4TN[0]	PCIEX2	O

Table 22-2. Pin Listing by Signal Name (Sheet 5 of 33)

Pin Name	Signal Name	Signal Buffer Type	Direction
AR7	PE4TN[1]	PCIEX2	O
AP7	PE4TN[2]	PCIEX2	O
AT9	PE4TN[3]	PCIEX2	O
AR6	PE4TP[0]	PCIEX2	O
AT7	PE4TP[1]	PCIEX2	O
AP8	PE4TP[2]	PCIEX2	O
AT8	PE4TP[3]	PCIEX2	O
AK10	PE5RN[0]	PCIEX2	I
AK11	PE5RN[1]	PCIEX2	I
AM13	PE5RN[2]	PCIEX2	I
AL13	PE5RN[3]	PCIEX2	I
AL10	PE5RP[0]	PCIEX2	I
AJ11	PE5RP[1]	PCIEX2	I
AM12	PE5RP[2]	PCIEX2	I
AL14	PE5RP[3]	PCIEX2	I
AR9	PE5TN[0]	PCIEX2	O
AT10	PE5TN[1]	PCIEX2	O
AP11	PE5TN[2]	PCIEX2	O
AP13	PE5TN[3]	PCIEX2	O
AP9	PE5TP[0]	PCIEX2	O
AR10	PE5TP[1]	PCIEX2	O
AR11	PE5TP[2]	PCIEX2	O
AP12	PE5TP[3]	PCIEX2	O
AK12	PE6RN[0]	PCIEX2	I
AL15	PE6RN[1]	PCIEX2	I
AJ14	PE6RN[2]	PCIEX2	I
AJ12	PE6RN[3]	PCIEX2	I
AL12	PE6RP[0]	PCIEX2	I
AK15	PE6RP[1]	PCIEX2	I
AK14	PE6RP[2]	PCIEX2	I
AJ13	PE6RP[3]	PCIEX2	I
AN15	PE6TN[0]	PCIEX2	O
AT15	PE6TN[1]	PCIEX2	O
AR14	PE6TN[2]	PCIEX2	O
AM16	PE6TN[3]	PCIEX2	O
AN14	PE6TP[0]	PCIEX2	O
AT14	PE6TP[1]	PCIEX2	O
AP14	PE6TP[2]	PCIEX2	O
AM15	PE6TP[3]	PCIEX2	O
AH24	PE7RN[0]	PCIEX2	I

Table 22-2. Pin Listing by Signal Name (Sheet 6 of 33)

Pin Name	Signal Name	Signal Buffer Type	Direction
AJ23	PE7RN[1]	PCIEX2	I
AL23	PE7RN[2]	PCIEX2	I
AK24	PE7RN[3]	PCIEX2	I
AH23	PE7RP[0]	PCIEX2	I
AK23	PE7RP[1]	PCIEX2	I
AL24	PE7RP[2]	PCIEX2	I
AK25	PE7RP[3]	PCIEX2	I
AR28	PE7TN[0]	PCIEX2	O
AN27	PE7TN[1]	PCIEX2	O
AP25	PE7TN[2]	PCIEX2	O
AP23	PE7TN[3]	PCIEX2	O
AP28	PE7TP[0]	PCIEX2	O
AP27	PE7TP[1]	PCIEX2	O
AN25	PE7TP[2]	PCIEX2	O
AR23	PE7TP[3]	PCIEX2	O
AM26	PE8RN[0]	PCIEX2	I
AJ26	PE8RN[1]	PCIEX2	I
AL27	PE8RN[2]	PCIEX2	I
AH25	PE8RN[3]	PCIEX2	I
AL26	PE8RP[0]	PCIEX2	I
AJ27	PE8RP[1]	PCIEX2	I
AL28	PE8RP[2]	PCIEX2	I
AJ25	PE8RP[3]	PCIEX2	I
AN23	PE8TN[0]	PCIEX2	O
AR25	PE8TN[1]	PCIEX2	O
AR26	PE8TN[2]	PCIEX2	O
AT27	PE8TN[3]	PCIEX2	O
AN24	PE8TP[0]	PCIEX2	O
AR24	PE8TP[1]	PCIEX2	O
AP26	PE8TP[2]	PCIEX2	O
AT26	PE8TP[3]	PCIEX2	O
AL29	PE9RN[0]	PCIEX2	I
AK30	PE9RN[1]	PCIEX2	I
AL31	PE9RN[2]	PCIEX2	I
AK28	PE9RN[3]	PCIEX2	I
AK29	PE9RP[0]	PCIEX2	I
AK31	PE9RP[1]	PCIEX2	I
AL32	PE9RP[2]	PCIEX2	I
AJ28	PE9RP[3]	PCIEX2	I
AN29	PE9TN[0]	PCIEX2	O

Table 22-2. Pin Listing by Signal Name (Sheet 7 of 33)

Pin Name	Signal Name	Signal Buffer Type	Direction
AT29	PE9TN[1]	PCIEX2	O
AR30	PE9TN[2]	PCIEX2	O
AN30	PE9TN[3]	PCIEX2	O
AN28	PE9TP[0]	PCIEX2	O
AT28	PE9TP[1]	PCIEX2	O
AR29	PE9TP[2]	PCIEX2	O
AP30	PE9TP[3]	PCIEX2	O
AB28	PEHPSCL	GPIO	O
AD30	PEHPSDA	GPIO	I/O
AK35	PESBLCSEL	GPIO	I
R33	PEWIDTH[0]	GPIO	I/O
T30	PEWIDTH[1]	GPIO	I/O
R36	PEWIDTH[2]	GPIO	I/O
N28	PEWIDTH[3]	GPIO	I/O
T28	PEWIDTH[4]	GPIO	I/O
P28	PEWIDTH[5]	GPIO	I/O
C35	PLLPWRDET	GPIO	I
Y9	QPI0ICOMP	Analog	I/O
AA9	QPI0RCOMP	Analog	I/O
AC7	QPI0REFCLKN	HCSL	I
AB7	QPI0REFCLKP	HCSL	I
L5	QPI0RNCLK[0]	Intel QPI	I
K8	QPI0RNDAT[0]	Intel QPI	I
J7	QPI0RNDAT[1]	Intel QPI	I
N1	QPI0RNDAT[10]	Intel QPI	I
L3	QPI0RNDAT[11]	Intel QPI	I
N2	QPI0RNDAT[12]	Intel QPI	I
T1	QPI0RNDAT[13]	Intel QPI	I
P3	QPI0RNDAT[14]	Intel QPI	I
R4	QPI0RNDAT[15]	Intel QPI	I
T5	QPI0RNDAT[16]	Intel QPI	I
P5	QPI0RNDAT[17]	Intel QPI	I
R7	QPI0RNDAT[18]	Intel QPI	I
P6	QPI0RNDAT[19]	Intel QPI	I
H6	QPI0RNDAT[2]	Intel QPI	I
G5	QPI0RNDAT[3]	Intel QPI	I
J4	QPI0RNDAT[4]	Intel QPI	I
G4	QPI0RNDAT[5]	Intel QPI	I
G1	QPI0RNDAT[6]	Intel QPI	I
H2	QPI0RNDAT[7]	Intel QPI	I

Table 22-2. Pin Listing by Signal Name (Sheet 8 of 33)

Pin Name	Signal Name	Signal Buffer Type	Direction
J3	QPI0RNDAT[8]	Intel QPI	I
K1	QPI0RNDAT[9]	Intel QPI	I
K5	QPI0RPCLK[0]	Intel QPI	I
L8	QPI0RPDAT[0]	Intel QPI	I
K7	QPI0RPDAT[1]	Intel QPI	I
M1	QPI0RPDAT[10]	Intel QPI	I
M3	QPI0RPDAT[11]	Intel QPI	I
P2	QPI0RPDAT[12]	Intel QPI	I
R1	QPI0RPDAT[13]	Intel QPI	I
R3	QPI0RPDAT[14]	Intel QPI	I
T4	QPI0RPDAT[15]	Intel QPI	I
U5	QPI0RPDAT[16]	Intel QPI	I
N5	QPI0RPDAT[17]	Intel QPI	I
T7	QPI0RPDAT[18]	Intel QPI	I
R6	QPI0RPDAT[19]	Intel QPI	I
J6	QPI0RPDAT[2]	Intel QPI	I
H5	QPI0RPDAT[3]	Intel QPI	I
K4	QPI0RPDAT[4]	Intel QPI	I
F4	QPI0RPDAT[5]	Intel QPI	I
F1	QPI0RPDAT[6]	Intel QPI	I
G2	QPI0RPDAT[7]	Intel QPI	I
H3	QPI0RPDAT[8]	Intel QPI	I
J1	QPI0RPDAT[9]	Intel QPI	I
N7	QPI0RXBG[0]	Analog	I/O
M7	QPI0RXBG[1]	Analog	I/O
AC1	QPI0TNCLK[0]	Intel QPI	O
AG6	QPI0TNDAT[0]	Intel QPI	O
AG5	QPI0TNDAT[1]	Intel QPI	O
AA2	QPI0TNDAT[10]	Intel QPI	O
Y1	QPI0TNDAT[11]	Intel QPI	O
W2	QPI0TNDAT[12]	Intel QPI	O
Y3	QPI0TNDAT[13]	Intel QPI	O
W4	QPI0TNDAT[14]	Intel QPI	O
W5	QPI0TNDAT[15]	Intel QPI	O
W8	QPI0TNDAT[16]	Intel QPI	O
W7	QPI0TNDAT[17]	Intel QPI	O
Y6	QPI0TNDAT[18]	Intel QPI	O
AA5	QPI0TNDAT[19]	Intel QPI	O
AJ4	QPI0TNDAT[2]	Intel QPI	O
AG3	QPI0TNDAT[3]	Intel QPI	O

Table 22-2. Pin Listing by Signal Name (Sheet 9 of 33)

Pin Name	Signal Name	Signal Buffer Type	Direction
AJ1	QPI0TNDAT[4]	Intel QPI	O
AF4	QPI0TNDAT[6]	Intel QPI	O
AF1	QPI0TNDAT[7]	Intel QPI	O
AE2	QPI0TNDAT[8]	Intel QPI	O
AD3	QPI0TNDAT[9]	Intel QPI	O
AB1	QPI0TPCLK[0]	Intel QPI	O
AF6	QPI0TPDAT[0]	Intel QPI	O
AH5	QPI0TPDAT[1]	Intel QPI	O
AB2	QPI0TPDAT[10]	Intel QPI	O
W1	QPI0TPDAT[11]	Intel QPI	O
V2	QPI0TPDAT[12]	Intel QPI	O
AA3	QPI0TPDAT[13]	Intel QPI	O
Y4	QPI0TPDAT[14]	Intel QPI	O
V6	QPI0TPDAT[15]	Intel QPI	O
V8	QPI0TPDAT[16]	Intel QPI	O
Y7	QPI0TPDAT[17]	Intel QPI	O
AA6	QPI0TPDAT[18]	Intel QPI	O
AB5	QPI0TPDAT[19]	Intel QPI	O
AH4	QPI0TPDAT[2]	Intel QPI	O
AF3	QPI0TPDAT[3]	Intel QPI	O
AH1	QPI0TPDAT[4]	Intel QPI	O
AG2	QPI0TPDAT[5]	Intel QPI	O
AE4	QPI0TPDAT[6]	Intel QPI	O
AE1	QPI0TPDAT[7]	Intel QPI	O
AD2	QPI0TPDAT[8]	Intel QPI	O
AC3	QPI0TPDAT[9]	Intel QPI	O
AA8	QPI0TXBG[0]	Analog	I/O
AB8	QPI0TXBG[1]	Analog	I/O
L10	QPI0VRMVREF0	Cmos	I
M11	QPI0VRMVREF1	Cmos	I
T2	QPI0VRMVREF2	Cmos	I
U3	QPI0VRMVREF3	Cmos	I
AB10	QPI0VRMVREF4	Cmos	I
J14	QPI1ICOMP	Analog	I/O
J13	QPI1RCOMP	Analog	I/O
G11	QPI1REFCLKN	HCSL	I
G12	QPI1REFCLKP	HCSL	I
E23	QPI1RNCLK[0]	Intel QPI	I
H24	QPI1RNDAT[0]	Intel QPI	I
G25	QPI1RNDAT[1]	Intel QPI	I

Table 22-2. Pin Listing by Signal Name (Sheet 10 of 33)

Pin Name	Signal Name	Signal Buffer Type	Direction
A21	QPI1RNDAT[10]	Intel QPI	I
C23	QPI1RNDAT[11]	Intel QPI	I
B21	QPI1RNDAT[12]	Intel QPI	I
A18	QPI1RNDAT[13]	Intel QPI	I
C20	QPI1RNDAT[14]	Intel QPI	I
D19	QPI1RNDAT[15]	Intel QPI	I
E18	QPI1RNDAT[16]	Intel QPI	I
E20	QPI1RNDAT[17]	Intel QPI	I
G19	QPI1RNDAT[18]	Intel QPI	I
F20	QPI1RNDAT[19]	Intel QPI	I
F26	QPI1RNDAT[2]	Intel QPI	I
E27	QPI1RNDAT[3]	Intel QPI	I
D25	QPI1RNDAT[4]	Intel QPI	I
D27	QPI1RNDAT[5]	Intel QPI	I
A27	QPI1RNDAT[6]	Intel QPI	I
B26	QPI1RNDAT[7]	Intel QPI	I
C25	QPI1RNDAT[8]	Intel QPI	I
A24	QPI1RNDAT[9]	Intel QPI	I
E24	QPI1RPCLK[0]	Intel QPI	I
H23	QPI1RPDAT[0]	Intel QPI	I
G24	QPI1RPDAT[1]	Intel QPI	I
A22	QPI1RPDAT[10]	Intel QPI	I
C22	QPI1RPDAT[11]	Intel QPI	I
B20	QPI1RPDAT[12]	Intel QPI	I
A19	QPI1RPDAT[13]	Intel QPI	I
C19	QPI1RPDAT[14]	Intel QPI	I
D18	QPI1RPDAT[15]	Intel QPI	I
E17	QPI1RPDAT[16]	Intel QPI	I
E21	QPI1RPDAT[17]	Intel QPI	I
G18	QPI1RPDAT[18]	Intel QPI	I
F19	QPI1RPDAT[19]	Intel QPI	I
F25	QPI1RPDAT[2]	Intel QPI	I
E26	QPI1RPDAT[3]	Intel QPI	I
D24	QPI1RPDAT[4]	Intel QPI	I
D28	QPI1RPDAT[5]	Intel QPI	I
A28	QPI1RPDAT[6]	Intel QPI	I
B27	QPI1RPDAT[7]	Intel QPI	I
C26	QPI1RPDAT[8]	Intel QPI	I
A25	QPI1RPDAT[9]	Intel QPI	I
G21	QPI1RXBG[0]	Analog	I/O

Table 22-2. Pin Listing by Signal Name (Sheet 11 of 33)

Pin Name	Signal Name	Signal Buffer Type	Direction
G22	QPI1RXBG[1]	Analog	I/O
A11	QPI1TNCLK[0]	Intel QPI	O
F7	QPI1TNDAT[0]	Intel QPI	O
E7	QPI1TNDAT[1]	Intel QPI	O
B13	QPI1TNDAT[10]	Intel QPI	O
A14	QPI1TNDAT[11]	Intel QPI	O
B15	QPI1TNDAT[12]	Intel QPI	O
C14	QPI1TNDAT[13]	Intel QPI	O
D15	QPI1TNDAT[14]	Intel QPI	O
E15	QPI1TNDAT[15]	Intel QPI	I
H15	QPI1TNDAT[16]	Intel QPI	O
G15	QPI1TNDAT[17]	Intel QPI	O
F14	QPI1TNDAT[18]	Intel QPI	O
E13	QPI1TNDAT[19]	Intel QPI	O
D5	QPI1TNDAT[2]	Intel QPI	O
C7	QPI1TNDAT[3]	Intel QPI	O
A5	QPI1TNDAT[4]	Intel QPI	O
B6	QPI1TNDAT[5]	Intel QPI	O
D8	QPI1TNDAT[6]	Intel QPI	O
A8	QPI1TNDAT[7]	Intel QPI	O
B9	QPI1TNDAT[8]	Intel QPI	O
C10	QPI1TNDAT[9]	Intel QPI	O
A12	QPI1TPCLK[0]	Intel QPI	O
F8	QPI1TPDAT[0]	Intel QPI	O
E6	QPI1TPDAT[1]	Intel QPI	O
B12	QPI1TPDAT[10]	Intel QPI	O
A15	QPI1TPDAT[11]	Intel QPI	O
B16	QPI1TPDAT[12]	Intel QPI	O
C13	QPI1TPDAT[13]	Intel QPI	O
D14	QPI1TPDAT[14]	Intel QPI	O
F16	QPI1TPDAT[15]	Intel QPI	O
H16	QPI1TPDAT[16]	Intel QPI	O
G14	QPI1TPDAT[17]	Intel QPI	O
F13	QPI1TPDAT[18]	Intel QPI	O
E12	QPI1TPDAT[19]	Intel QPI	O
D6	QPI1TPDAT[2]	Intel QPI	O
C8	QPI1TPDAT[3]	Intel QPI	O
A6	QPI1TPDAT[4]	Intel QPI	O
B7	QPI1TPDAT[5]	Intel QPI	O
D9	QPI1TPDAT[6]	Intel QPI	O

Table 22-2. Pin Listing by Signal Name (Sheet 12 of 33)

Pin Name	Signal Name	Signal Buffer Type	Direction
A9	QPI1TPDAT[7]	Intel QPI	O
B10	QPI1TPDAT[8]	Intel QPI	O
C11	QPI1TPDAT[9]	Intel QPI	O
H13	QPI1TXBG[0]	Analog	I/O
H12	QPI1TXBG[1]	Analog	I/O
J23	QPI1VRMVREFRX0	Cmos	I
H26	QPI1VRMVREFRX1	Cmos	I
B18	QPI1VRMVREFRX2	Cmos	I
C17	QPI1VRMVREFRX3	Cmos	I
K11	QPI1VRMVREFTX	Cmos	I
AG35	QPIFREQSEL0	GPIO	I
AA30	QPIFREQSEL1	GPIO	I
AJ35	QPISBLCSEL	GPIO	I
AL2	RESETO_N	GPIO	I/O
G28	RMIICLK	GPIO	I
J26	RMIICLKREFOUT	GPIO	O
A31	RMIICRSDV	GPIO	I
D30	RMIIMDC	GPIO	O
D31	RMIIMDIO	GPIO	I/O
B32	RMIIRXD[0]	GPIO	I
E29	RMIIRXD[1]	GPIO	I
E31	RMIITXD[0]	GPIO	O
J27	RMIITXD[1]	GPIO	O
G27	RMIITXEN	GPIO	O
AT24	RSVD	No Connect	
AT23	RSVD	No Connect	
AP21	RSVD	No Connect	
AN33	RSVD	No Connect	
AN18	RSVD	No Connect	
AM35	RSVD	No Connect	
AM31	RSVD	No Connect	
AM27	RSVD	No Connect	
AM25	RSVD	No Connect	
AM24	RSVD	No Connect	
AM22	RSVD	No Connect	
AM20	RSVD	No Connect	
AM11	RSVD	No Connect	
AM10	RSVD	No Connect	
AM5	RSVD	No Connect	
AM3	RSVD	No Connect	

Table 22-2. Pin Listing by Signal Name (Sheet 13 of 33)

Pin Name	Signal Name	Signal Buffer Type	Direction
AM2	RSVD	No Connect	
AK3	RSVD	No Connect	
AH31	RSVD	No Connect	
AH29	RSVD	No Connect	
AH28	RSVD	No Connect	
AH26	RSVD	No Connect	
AH21	RSVD	No Connect	
AH20	RSVD	No Connect	
AH19	RSVD	No Connect	
AH18	RSVD	No Connect	
AH16	RSVD	No Connect	
AH15	RSVD	No Connect	
AH14	RSVD	No Connect	
AH13	RSVD	No Connect	
AH11	RSVD	No Connect	
AH10	RSVD	No Connect	
AH9	RSVD	No Connect	
AH8	RSVD	No Connect	
AG30	RSVD	No Connect	
AG27	RSVD	No Connect	
AG26	RSVD	No Connect	
AG9	RSVD	No Connect	
AG8	RSVD	No Connect	
AF26	RSVD	No Connect	
AF10	RSVD	No Connect	
AF9	RSVD	No Connect	
AF7	RSVD	No Connect	
AE10	RSVD	No Connect	
AE8	RSVD	No Connect	
AE7	RSVD	No Connect	
AD10	RSVD	No Connect	
AD9	RSVD	No Connect	
AD8	RSVD	No Connect	
AC25	RSVD	No Connect	
AC9	RSVD	No Connect	
AC6	RSVD	No Connect	
AC4	RSVD	No Connect	
AB4	RSVD	No Connect	
AA32	RSVD	No Connect	
AA27	RSVD	No Connect	

Table 22-2. Pin Listing by Signal Name (Sheet 14 of 33)

Pin Name	Signal Name	Signal Buffer Type	Direction
Y32	RSVD	No Connect	
Y10	RSVD	No Connect	
W30	RSVD	No Connect	
W28	RSVD	No Connect	
W10	RSVD	No Connect	
V27	RSVD	No Connect	
V9	RSVD	No Connect	
V5	RSVD	No Connect	
U10	RSVD	No Connect	
U9	RSVD	No Connect	
U8	RSVD	No Connect	
U6	RSVD	No Connect	
T10	RSVD	No Connect	
T8	RSVD	No Connect	
R9	RSVD	No Connect	
P10	RSVD	No Connect	
P9	RSVD	No Connect	
P8	RSVD	No Connect	
N11	RSVD	No Connect	
N8	RSVD	No Connect	
M9	RSVD	No Connect	
M4	RSVD	No Connect	
L35	RSVD	No Connect	
L34	RSVD	No Connect	
L32	RSVD	No Connect	
L31	RSVD	No Connect	
L26	RSVD	No Connect	
L9	RSVD	No Connect	
L6	RSVD	No Connect	
L2	RSVD	No Connect	
K27	RSVD	No Connect	
K25	RSVD	No Connect	
K24	RSVD	No Connect	
K13	RSVD	No Connect	
K12	RSVD	No Connect	
K2	RSVD	No Connect	
J24	RSVD	No Connect	
J21	RSVD	No Connect	
J19	RSVD	No Connect	
J16	RSVD	No Connect	

Table 22-2. Pin Listing by Signal Name (Sheet 15 of 33)

Pin Name	Signal Name	Signal Buffer Type	Direction
J11	RSVD	No Connect	
J10	RSVD	No Connect	
H35	RSVD	No Connect	
H34	RSVD	No Connect	
H21	RSVD	No Connect	
H20	RSVD	No Connect	
H18	RSVD	No Connect	
H17	RSVD	No Connect	
H10	RSVD	No Connect	
H9	RSVD	No Connect	
G9	RSVD	No Connect	
G8	RSVD	No Connect	
F23	RSVD	No Connect	
F17	RSVD	No Connect	
F11	RSVD	No Connect	
E16	RSVD	No Connect	
D22	RSVD	No Connect	
D12	RSVD	No Connect	
D11	RSVD	No Connect	
C5	RSVD	No Connect	
C4	RSVD	No Connect	
B24	RSVD	No Connect	
B23	RSVD	No Connect	
B4	RSVD	No Connect	
AB27	SMBSCL	GPIO	I/O
AD29	SMBSDA	GPIO	I/O
AE31	SMBUSID	GPIO	I
AG32	SMI_N	GPIO	I
T33	TCK	GPIO	I
V26	TDI	GPIO	I
V30	TDO	GPIO	O
A2	TEST[0]	No Connect	I/O
A36	TEST[1]	No Connect	I/O
B1	TEST[2]	No Connect	I/O
AT1	TEST[3]	No Connect	I/O
AT36	TEST[4]	No Connect	I/O
P29	FWAGNT_ESIMODE	GPIO	I
U28	TESTHI[2]	GPIO	I
R29	TESTHI[3]	GPIO	I
AR12	TESTLO1	Analog	I/O

Table 22-2. Pin Listing by Signal Name (Sheet 16 of 33)

Pin Name	Signal Name	Signal Buffer Type	Direction
AF32	TESTLO10	GPIO	I
AE34	TESTLO11	GPIO	I/O
AC32	TESTLO12	GPIO	I
AB30	TESTLO13	GPIO	I
AA29	QPICKFAIL	GPIO	I
Y28	TESTLO15	GPIO	I
W27	TESTLO16	GPIO	I
V32	TESTLO17	GPIO	I
T27	TESTLO18	GPIO	I
R35	TESTLO19	GPIO	I/O
AN9	TESTLO2	Analog	I/O
AD33	TESTLO21	GPIO	I/O
C33	TESTLO22	GPIO	I/O
AC29	TESTLO23	GPIO	I/O
AA26	TESTLO24	GPIO	I/O
AE33	TESTLO25	GPIO	I/O
D36	TESTLO26	GPIO	I/O
AN8	TESTLO3	Analog	I/O
AM6	TESTLO4	Analog	I/O
AJ34	TESTLO5	GPIO	I
AH34	NODEID[2]	GPIO	I
AH33	TESTHI[4]	GPIO	I
AF35	TESTLO8	GPIO	I
AF34	TESTLO9	GPIO	I
AD26	THERMALERT_N	GPIO	O
AC26	THERMTRIP_N	GPIO	I/O
U31	TMS	GPIO	I
R30	TRST_N	GPIO	I
AJ3	TSIREF	Analog	I
AC22	VCC	Analog	PWR
AC20	VCC	Analog	PWR
AB23	VCC	Analog	PWR
AB21	VCC	Analog	PWR
AB19	VCC	Analog	PWR
AB17	VCC	Analog	PWR
AB15	VCC	Analog	PWR
AA24	VCC	Analog	PWR
AA22	VCC	Analog	PWR
AA20	VCC	Analog	PWR
AA18	VCC	Analog	PWR

Table 22-2. Pin Listing by Signal Name (Sheet 17 of 33)

Pin Name	Signal Name	Signal Buffer Type	Direction
AA16	VCC	Analog	PWR
Y26	VCC	Analog	PWR
Y25	VCC	Analog	PWR
Y23	VCC	Analog	PWR
Y21	VCC	Analog	PWR
Y19	VCC	Analog	PWR
Y17	VCC	Analog	PWR
W24	VCC	Analog	PWR
W22	VCC	Analog	PWR
W20	VCC	Analog	PWR
W18	VCC	Analog	PWR
W16	VCC	Analog	PWR
V24	VCC	Analog	PWR
V23	VCC	Analog	PWR
V21	VCC	Analog	PWR
V19	VCC	Analog	PWR
V17	VCC	Analog	PWR
U22	VCC	Analog	PWR
U20	VCC	Analog	PWR
U18	VCC	Analog	PWR
U16	VCC	Analog	PWR
T19	VCC	Analog	PWR
T17	VCC	Analog	PWR
R20	VCC	Analog	PWR
R18	VCC	Analog	PWR
R16	VCC	Analog	PWR
P19	VCC	Analog	PWR
P17	VCC	Analog	PWR
P15	VCC	Analog	PWR
N36	VCCADDRPLL	Analog	PWR
AF19	VCCAPE	Analog	PWR
AF17	VCCAPE	Analog	PWR
AF15	VCCAPE	Analog	PWR
AF13	VCCAPE	Analog	PWR
AF12	VCCAPE	Analog	PWR
AE19	VCCAPE	Analog	PWR
AE18	VCCAPE	Analog	PWR
AE17	VCCAPE	Analog	PWR
AE16	VCCAPE	Analog	PWR
AE15	VCCAPE	Analog	PWR

Table 22-2. Pin Listing by Signal Name (Sheet 18 of 33)

Pin Name	Signal Name	Signal Buffer Type	Direction
AE14	VCCAPE	Analog	PWR
AE13	VCCAPE	Analog	PWR
AE12	VCCAPE	Analog	PWR
AD19	VCCAPE	Analog	PWR
AD18	VCCAPE	Analog	PWR
AD17	VCCAPE	Analog	PWR
AD16	VCCAPE	Analog	PWR
AD15	VCCAPE	Analog	PWR
AD14	VCCAPE	Analog	PWR
AD13	VCCAPE	Analog	PWR
AD12	VCCAPE	Analog	PWR
AC19	VCCAPE	Analog	PWR
AC17	VCCAPE	Analog	PWR
AC15	VCCAPE	Analog	PWR
AC13	VCCAPE	Analog	PWR
AC12	VCCAPE	Analog	PWR
AF23	VCCAPE1	Analog	PWR
AF22	VCCAPE1	Analog	PWR
AF21	VCCAPE1	Analog	PWR
AF20	VCCAPE1	Analog	PWR
AE25	VCCAPE1	Analog	PWR
AE24	VCCAPE1	Analog	PWR
AE23	VCCAPE1	Analog	PWR
AE22	VCCAPE1	Analog	PWR
AE21	VCCAPE1	Analog	PWR
AE20	VCCAPE1	Analog	PWR
AD25	VCCAPE1	Analog	PWR
AD24	VCCAPE1	Analog	PWR
AD23	VCCAPE1	Analog	PWR
AD22	VCCAPE1	Analog	PWR
AD21	VCCAPE1	Analog	PWR
AD20	VCCAPE1	Analog	PWR
AT19	VCCAPE1BG	Analog	PWR
AT20	VCCAPE1PLL	Analog	PWR
AN2	VCCAPEBG	Analog	PWR
AN1	VCCAPEPLL	Analog	PWR
AA15	VCCAQPI0	Analog	PWR
AA14	VCCAQPI0	Analog	PWR
AA13	VCCAQPI0	Analog	PWR
AA12	VCCAQPI0	Analog	PWR

Table 22-2. Pin Listing by Signal Name (Sheet 19 of 33)

Pin Name	Signal Name	Signal Buffer Type	Direction
Y15	VCCAQPI0	Analog	PWR
Y14	VCCAQPI0	Analog	PWR
W15	VCCAQPI0	Analog	PWR
W14	VCCAQPI0	Analog	PWR
W13	VCCAQPI0	Analog	PWR
W12	VCCAQPI0	Analog	PWR
W11	VCCAQPI0	Analog	PWR
V15	VCCAQPI0	Analog	PWR
V14	VCCAQPI0	Analog	PWR
U15	VCCAQPI0	Analog	PWR
U14	VCCAQPI0	Analog	PWR
U13	VCCAQPI0	Analog	PWR
U12	VCCAQPI0	Analog	PWR
U11	VCCAQPI0	Analog	PWR
T15	VCCAQPI0	Analog	PWR
T14	VCCAQPI0	Analog	PWR
R14	VCCAQPI0	Analog	PWR
R13	VCCAQPI0	Analog	PWR
R12	VCCAQPI0	Analog	PWR
P13	VCCAQPI0	Analog	PWR
P12	VCCAQPI0	Analog	PWR
N12	VCCAQPI0	Analog	PWR
AD5	VCCAQPI0PLL	Analog	I/O
D1	VCCAQPI0RXBG	Analog	I/O
U2	VCCAQPI0TXBG	Analog	I/O
N19	VCCAQPI1	Analog	PWR
N18	VCCAQPI1	Analog	PWR
N17	VCCAQPI1	Analog	PWR
N16	VCCAQPI1	Analog	PWR
N15	VCCAQPI1	Analog	PWR
N14	VCCAQPI1	Analog	PWR
N13	VCCAQPI1	Analog	PWR
M20	VCCAQPI1	Analog	PWR
M19	VCCAQPI1	Analog	PWR
M18	VCCAQPI1	Analog	PWR
M17	VCCAQPI1	Analog	PWR
M16	VCCAQPI1	Analog	PWR
M15	VCCAQPI1	Analog	PWR
M14	VCCAQPI1	Analog	PWR
M13	VCCAQPI1	Analog	PWR

Table 22-2. Pin Listing by Signal Name (Sheet 20 of 33)

Pin Name	Signal Name	Signal Buffer Type	Direction
M12	VCCAQPI1	Analog	PWR
L20	VCCAQPI1	Analog	PWR
L19	VCCAQPI1	Analog	PWR
L17	VCCAQPI1	Analog	PWR
L15	VCCAQPI1	Analog	PWR
L13	VCCAQPI1	Analog	PWR
K19	VCCAQPI1	Analog	PWR
K17	VCCAQPI1	Analog	PWR
K15	VCCAQPI1	Analog	PWR
E10	VCCAQPI1PLL	Analog	PWR
A30	VCCAQPI1RXBG	Analog	I/O
B17	VCCAQPI1TXBG	Analog	I/O
R27	VCCCLPWRP	Analog	I/O
P26	VCCDDR18	Analog	PWR
P25	VCCDDR18	Analog	PWR
P23	VCCDDR18	Analog	PWR
N25	VCCDDR18	Analog	PWR
N24	VCCDDR18	Analog	PWR
M26	VCCDDR18	Analog	PWR
M24	VCCDDR18	Analog	PWR
M23	VCCDDR18	Analog	PWR
L25	VCCDDR18	Analog	PWR
AT22	VCCDPE1PLL	Analog	PWR
AP2	VCCDPEPLL	Analog	PWR
V29	VCCEPW	Analog	I/O
T24	VCCEPW	Analog	PWR
T23	VCCEPW	Analog	PWR
T21	VCCEPW	Analog	PWR
R26	VCCEPW	Analog	PWR
R22	VCCEPW	Analog	PWR
P21	VCCEPW	Analog	PWR
N22	VCCEPW	Analog	PWR
L22	VCCEPW	Analog	PWR
K23	VCCEPW	Analog	PWR
K22	VCCEPW	Analog	PWR
AB25	VCCMISC33	Analog	PWR
AB24	VCCMISC33	Analog	PWR
M21	VCCMISC33EPW	Analog	PWR
K21	VCCMISC33EPW	Analog	PWR
K20	VCCMISC33EPW	Analog	PWR

Table 22-2. Pin Listing by Signal Name (Sheet 21 of 33)

Pin Name	Signal Name	Signal Buffer Type	Direction
AR34	VCCPE1VRM	Analog	PWR
AT18	VCCPEVRM	Analog	PWR
D2	VCCQPI0VRMRX0	Analog	I/O
E3	VCCQPI0VRMRX1	Analog	I/O
F3	VCCQPI0VRMRX2	Analog	I/O
E2	VCCQPI0VRMRX3	Analog	I/O
N4	VCCQPI0VRMRXOP0	Analog	I/O
M6	VCCQPI0VRMRXOP1	Analog	I/O
AD6	VCCQPI0VRMRXOP2	Analog	I/O
V3	VCCQPI0VRMRXOP3	Analog	I/O
AE5	VCCQPI0VRMTX	Analog	I/O
AC10	VCCQPI0VRMTXOP0	Analog	I/O
B30	VCCQPI1VRMRX0	Analog	I/O
C29	VCCQPI1VRMRX1	Analog	I/O
C28	VCCQPI1VRMRX2	Analog	I/O
B29	VCCQPI1VRMRX3	Analog	I/O
D21	VCCQPI1VRMRXOP0	Analog	I/O
F22	VCCQPI1VRMRXOP1	Analog	I/O
F10	VCCQPI1VRMRXOP2	Analog	I/O
C16	VCCQPI1VRMRXOP3	Analog	I/O
E9	VCCQPI1VRMTX	Analog	I/O
K10	VCCQPI1VRMTXOP0	Analog	I/O
AK2	VCCTS	Analog	PWR
U26	VCCXDP18	Analog	PWR
T25	VCCXDP18	Analog	PWR
T36	VREFCL	Cmos	I/O
Y29	VRMEN	GPIO	I
AT35	VSS	Analog	PWR
AT34	VSS	Analog	PWR
AT33	VSS	Analog	PWR
AT30	VSS	Analog	PWR
AT25	VSS	Analog	PWR
AT21	VSS	Analog	PWR
AT16	VSS	Analog	PWR
AT11	VSS	Analog	PWR
AT6	VSS	Analog	PWR
AT3	VSS	Analog	PWR
AT2	VSS	Analog	PWR
AR36	VSS	Analog	PWR
AR35	VSS	Analog	PWR

Table 22-2. Pin Listing by Signal Name (Sheet 22 of 33)

Pin Name	Signal Name	Signal Buffer Type	Direction
AR32	VSS	Analog	PWR
AR27	VSS	Analog	PWR
AR22	VSS	Analog	PWR
AR18	VSS	Analog	PWR
AR13	VSS	Analog	PWR
AR8	VSS	Analog	PWR
AR3	VSS	Analog	PWR
AR2	VSS	Analog	PWR
AR1	VSS	Analog	PWR
AP36	VSS	Analog	PWR
AP34	VSS	Analog	PWR
AP29	VSS	Analog	PWR
AP24	VSS	Analog	PWR
AP22	VSS	Analog	PWR
AP20	VSS	Analog	PWR
AP15	VSS	Analog	PWR
AP10	VSS	Analog	PWR
AP5	VSS	Analog	PWR
AP1	VSS	Analog	PWR
AN31	VSS	Analog	PWR
AN26	VSS	Analog	PWR
AN22	VSS	Analog	PWR
AN17	VSS	Analog	PWR
AN12	VSS	Analog	PWR
AN7	VSS	Analog	PWR
AN3	VSS	Analog	PWR
AM36	VSS	Analog	PWR
AM33	VSS	Analog	PWR
AM32	VSS	Analog	PWR
AM28	VSS	Analog	PWR
AM23	VSS	Analog	PWR
AM19	VSS	Analog	PWR
AM14	VSS	Analog	PWR
AM9	VSS	Analog	PWR
AM4	VSS	Analog	PWR
AL35	VSS	Analog	PWR
AL30	VSS	Analog	PWR
AL25	VSS	Analog	PWR
AL22	VSS	Analog	PWR
AL21	VSS	Analog	PWR

Table 22-2. Pin Listing by Signal Name (Sheet 23 of 33)

Pin Name	Signal Name	Signal Buffer Type	Direction
AL16	VSS	Analog	PWR
AL11	VSS	Analog	PWR
AL6	VSS	Analog	PWR
AK34	VSS	Analog	PWR
AK27	VSS	Analog	PWR
AK26	VSS	Analog	PWR
AK22	VSS	Analog	PWR
AK18	VSS	Analog	PWR
AK13	VSS	Analog	PWR
AK8	VSS	Analog	PWR
AK4	VSS	Analog	PWR
AK1	VSS	Analog	PWR
AJ36	VSS	Analog	PWR
AJ33	VSS	Analog	PWR
AJ31	VSS	Analog	PWR
AJ29	VSS	Analog	PWR
AJ24	VSS	Analog	PWR
AJ22	VSS	Analog	PWR
AJ20	VSS	Analog	PWR
AJ15	VSS	Analog	PWR
AJ10	VSS	Analog	PWR
AJ5	VSS	Analog	PWR
AJ2	VSS	Analog	PWR
AH35	VSS	Analog	PWR
AH32	VSS	Analog	PWR
AH27	VSS	Analog	PWR
AH22	VSS	Analog	PWR
AH17	VSS	Analog	PWR
AH12	VSS	Analog	PWR
AH7	VSS	Analog	PWR
AH6	VSS	Analog	PWR
AH3	VSS	Analog	PWR
AG34	VSS	Analog	PWR
AG31	VSS	Analog	PWR
AG28	VSS	Analog	PWR
AG25	VSS	Analog	PWR
AG24	VSS	Analog	PWR
AG23	VSS	Analog	PWR
AG22	VSS	Analog	PWR
AG21	VSS	Analog	PWR

Table 22-2. Pin Listing by Signal Name (Sheet 24 of 33)

Pin Name	Signal Name	Signal Buffer Type	Direction
AG20	VSS	Analog	PWR
AG19	VSS	Analog	PWR
AG18	VSS	Analog	PWR
AG17	VSS	Analog	PWR
AG16	VSS	Analog	PWR
AG15	VSS	Analog	PWR
AG14	VSS	Analog	PWR
AG13	VSS	Analog	PWR
AG12	VSS	Analog	PWR
AG11	VSS	Analog	PWR
AG10	VSS	Analog	PWR
AG7	VSS	Analog	PWR
AG4	VSS	Analog	PWR
AG1	VSS	Analog	PWR
AF36	VSS	Analog	PWR
AF33	VSS	Analog	PWR
AF30	VSS	Analog	PWR
AF27	VSS	Analog	PWR
AF25	VSS	Analog	PWR
AF24	VSS	Analog	PWR
AF18	VSS	Analog	PWR
AF16	VSS	Analog	PWR
AF14	VSS	Analog	PWR
AF11	VSS	Analog	PWR
AF8	VSS	Analog	PWR
AF5	VSS	Analog	PWR
AF2	VSS	Analog	PWR
AE35	VSS	Analog	PWR
AE32	VSS	Analog	PWR
AE29	VSS	Analog	PWR
AE26	VSS	Analog	PWR
AE11	VSS	Analog	PWR
AE9	VSS	Analog	PWR
AE6	VSS	Analog	PWR
AE3	VSS	Analog	PWR
AD34	VSS	Analog	PWR
AD31	VSS	Analog	PWR
AD28	VSS	Analog	PWR
AD11	VSS	Analog	PWR
AD7	VSS	Analog	PWR

Table 22-2. Pin Listing by Signal Name (Sheet 25 of 33)

Pin Name	Signal Name	Signal Buffer Type	Direction
AD4	VSS	Analog	PWR
AD1	VSS	Analog	PWR
AC36	VSS	Analog	PWR
AC33	VSS	Analog	PWR
AC30	VSS	Analog	PWR
AC27	VSS	Analog	PWR
AC24	VSS	Analog	PWR
AC23	VSS	Analog	PWR
AC21	VSS	Analog	PWR
AC18	VSS	Analog	PWR
AC16	VSS	Analog	PWR
AC14	VSS	Analog	PWR
AC11	VSS	Analog	PWR
AC8	VSS	Analog	PWR
AC5	VSS	Analog	PWR
AC2	VSS	Analog	PWR
AB35	VSS	Analog	PWR
AB32	VSS	Analog	PWR
AB29	VSS	Analog	PWR
AB26	VSS	Analog	PWR
AB22	VSS	Analog	PWR
AB20	VSS	Analog	PWR
AB18	VSS	Analog	PWR
AB16	VSS	Analog	PWR
AB14	VSS	Analog	PWR
AB13	VSS	Analog	PWR
AB12	VSS	Analog	PWR
AB11	VSS	Analog	PWR
AB9	VSS	Analog	PWR
AB6	VSS	Analog	PWR
AB3	VSS	Analog	PWR
AA34	VSS	Analog	PWR
AA31	VSS	Analog	PWR
AA28	VSS	Analog	PWR
AA25	VSS	Analog	PWR
AA23	VSS	Analog	PWR
AA21	VSS	Analog	PWR
AA19	VSS	Analog	PWR
AA17	VSS	Analog	PWR
AA11	VSS	Analog	PWR

Table 22-2. Pin Listing by Signal Name (Sheet 26 of 33)

Pin Name	Signal Name	Signal Buffer Type	Direction
AA10	VSS	Analog	PWR
AA7	VSS	Analog	PWR
AA4	VSS	Analog	PWR
AA1	VSS	Analog	PWR
Y36	VSS	Analog	PWR
Y33	VSS	Analog	PWR
Y30	VSS	Analog	PWR
Y27	VSS	Analog	PWR
Y24	VSS	Analog	PWR
Y22	VSS	Analog	PWR
Y20	VSS	Analog	PWR
Y18	VSS	Analog	PWR
Y16	VSS	Analog	PWR
Y13	VSS	Analog	PWR
Y12	VSS	Analog	PWR
Y11	VSS	Analog	PWR
Y8	VSS	Analog	PWR
Y5	VSS	Analog	PWR
Y2	VSS	Analog	PWR
W35	VSS	Analog	PWR
W32	VSS	Analog	PWR
W29	VSS	Analog	PWR
W26	VSS	Analog	PWR
W25	VSS	Analog	PWR
W23	VSS	Analog	PWR
W21	VSS	Analog	PWR
W19	VSS	Analog	PWR
W17	VSS	Analog	PWR
W9	VSS	Analog	PWR
W6	VSS	Analog	PWR
W3	VSS	Analog	PWR
V34	VSS	Analog	PWR
V31	VSS	Analog	PWR
V28	VSS	Analog	PWR
V25	VSS	Analog	PWR
V22	VSS	Analog	PWR
V20	VSS	Analog	PWR
V18	VSS	Analog	PWR
V16	VSS	Analog	PWR
V13	VSS	Analog	PWR

Table 22-2. Pin Listing by Signal Name (Sheet 27 of 33)

Pin Name	Signal Name	Signal Buffer Type	Direction
V12	VSS	Analog	PWR
V11	VSS	Analog	PWR
V10	VSS	Analog	PWR
V7	VSS	Analog	PWR
V4	VSS	Analog	PWR
V1	VSS	Analog	PWR
U36	VSS	Analog	PWR
U33	VSS	Analog	PWR
U30	VSS	Analog	PWR
U27	VSS	Analog	PWR
U24	VSS	Analog	PWR
U23	VSS	Analog	PWR
U21	VSS	Analog	PWR
U19	VSS	Analog	PWR
U17	VSS	Analog	PWR
U7	VSS	Analog	PWR
U4	VSS	Analog	PWR
U1	VSS	Analog	PWR
T35	VSS	Analog	PWR
T32	VSS	Analog	PWR
T29	VSS	Analog	PWR
T26	VSS	Analog	PWR
T22	VSS	Analog	PWR
T20	VSS	Analog	PWR
T18	VSS	Analog	PWR
T16	VSS	Analog	PWR
T13	VSS	Analog	PWR
T12	VSS	Analog	PWR
T11	VSS	Analog	PWR
T9	VSS	Analog	PWR
T6	VSS	Analog	PWR
T3	VSS	Analog	PWR
R34	VSS	Analog	PWR
R31	VSS	Analog	PWR
R28	VSS	Analog	PWR
R25	VSS	Analog	PWR
R23	VSS	Analog	PWR
R21	VSS	Analog	PWR
R19	VSS	Analog	PWR
R17	VSS	Analog	PWR

Table 22-2. Pin Listing by Signal Name (Sheet 28 of 33)

Pin Name	Signal Name	Signal Buffer Type	Direction
R15	VSS	Analog	PWR
R11	VSS	Analog	PWR
R10	VSS	Analog	PWR
R8	VSS	Analog	PWR
R5	VSS	Analog	PWR
R2	VSS	Analog	PWR
P36	VSS	Analog	PWR
P33	VSS	Analog	PWR
P30	VSS	Analog	PWR
P27	VSS	Analog	PWR
P24	VSS	Analog	PWR
P22	VSS	Analog	PWR
P20	VSS	Analog	PWR
P18	VSS	Analog	PWR
P16	VSS	Analog	PWR
P14	VSS	Analog	PWR
P11	VSS	Analog	PWR
P7	VSS	Analog	PWR
P4	VSS	Analog	PWR
P1	VSS	Analog	PWR
N35	VSS	Analog	PWR
N32	VSS	Analog	PWR
N29	VSS	Analog	PWR
N26	VSS	Analog	PWR
N23	VSS	Analog	PWR
N21	VSS	Analog	PWR
N20	VSS	Analog	PWR
N10	VSS	Analog	PWR
N9	VSS	Analog	PWR
N6	VSS	Analog	PWR
N3	VSS	Analog	PWR
M34	VSS	Analog	PWR
M31	VSS	Analog	PWR
M28	VSS	Analog	PWR
M25	VSS	Analog	PWR
M22	VSS	Analog	PWR
M10	VSS	Analog	PWR
M8	VSS	Analog	PWR
M5	VSS	Analog	PWR
M2	VSS	Analog	PWR

Table 22-2. Pin Listing by Signal Name (Sheet 29 of 33)

Pin Name	Signal Name	Signal Buffer Type	Direction
L36	VSS	Analog	PWR
L33	VSS	Analog	PWR
L30	VSS	Analog	PWR
L27	VSS	Analog	PWR
L24	VSS	Analog	PWR
L23	VSS	Analog	PWR
L21	VSS	Analog	PWR
L18	VSS	Analog	PWR
L16	VSS	Analog	PWR
L14	VSS	Analog	PWR
L12	VSS	Analog	PWR
L11	VSS	Analog	PWR
L7	VSS	Analog	PWR
L4	VSS	Analog	PWR
L1	VSS	Analog	PWR
K35	VSS	Analog	PWR
K32	VSS	Analog	PWR
K29	VSS	Analog	PWR
K26	VSS	Analog	PWR
K18	VSS	Analog	PWR
K16	VSS	Analog	PWR
K14	VSS	Analog	PWR
K9	VSS	Analog	PWR
K6	VSS	Analog	PWR
K3	VSS	Analog	PWR
J34	VSS	Analog	PWR
J31	VSS	Analog	PWR
J28	VSS	Analog	PWR
J25	VSS	Analog	PWR
J22	VSS	Analog	PWR
J20	VSS	Analog	PWR
J18	VSS	Analog	PWR
J17	VSS	Analog	PWR
J15	VSS	Analog	PWR
J12	VSS	Analog	PWR
J9	VSS	Analog	PWR
J8	VSS	Analog	PWR
J5	VSS	Analog	PWR
J2	VSS	Analog	PWR
H36	VSS	Analog	PWR

Table 22-2. Pin Listing by Signal Name (Sheet 30 of 33)

Pin Name	Signal Name	Signal Buffer Type	Direction
H33	VSS	Analog	PWR
H30	VSS	Analog	PWR
H27	VSS	Analog	PWR
H25	VSS	Analog	PWR
H22	VSS	Analog	PWR
H19	VSS	Analog	PWR
H14	VSS	Analog	PWR
H11	VSS	Analog	PWR
H8	VSS	Analog	PWR
H7	VSS	Analog	PWR
H4	VSS	Analog	PWR
H1	VSS	Analog	PWR
G35	VSS	Analog	PWR
G32	VSS	Analog	PWR
G29	VSS	Analog	PWR
G26	VSS	Analog	PWR
G23	VSS	Analog	PWR
G20	VSS	Analog	PWR
G17	VSS	Analog	PWR
G16	VSS	Analog	PWR
G13	VSS	Analog	PWR
G10	VSS	Analog	PWR
G7	VSS	Analog	PWR
G6	VSS	Analog	PWR
G3	VSS	Analog	PWR
F34	VSS	Analog	PWR
F31	VSS	Analog	PWR
F28	VSS	Analog	PWR
F27	VSS	Analog	PWR
F24	VSS	Analog	PWR
F21	VSS	Analog	PWR
F18	VSS	Analog	PWR
F15	VSS	Analog	PWR
F12	VSS	Analog	PWR
F9	VSS	Analog	PWR
F6	VSS	Analog	PWR
F5	VSS	Analog	PWR
F2	VSS	Analog	PWR
E36	VSS	Analog	PWR
E33	VSS	Analog	PWR

Table 22-2. Pin Listing by Signal Name (Sheet 31 of 33)

Pin Name	Signal Name	Signal Buffer Type	Direction
E30	VSS	Analog	PWR
E28	VSS	Analog	PWR
E25	VSS	Analog	PWR
E22	VSS	Analog	PWR
E19	VSS	Analog	PWR
E14	VSS	Analog	PWR
E11	VSS	Analog	PWR
E8	VSS	Analog	PWR
E5	VSS	Analog	PWR
E4	VSS	Analog	PWR
E1	VSS	Analog	PWR
D35	VSS	Analog	PWR
D32	VSS	Analog	PWR
D29	VSS	Analog	PWR
D26	VSS	Analog	PWR
D23	VSS	Analog	PWR
D20	VSS	Analog	PWR
D17	VSS	Analog	PWR
D16	VSS	Analog	PWR
D13	VSS	Analog	PWR
D10	VSS	Analog	PWR
D7	VSS	Analog	PWR
D4	VSS	Analog	PWR
D3	VSS	Analog	PWR
C36	VSS	Analog	PWR
C34	VSS	Analog	PWR
C31	VSS	Analog	PWR
C30	VSS	Analog	PWR
C27	VSS	Analog	PWR
C24	VSS	Analog	PWR
C21	VSS	Analog	PWR
C18	VSS	Analog	PWR
C15	VSS	Analog	PWR
C12	VSS	Analog	PWR
C9	VSS	Analog	PWR
C6	VSS	Analog	PWR
C3	VSS	Analog	PWR
C2	VSS	Analog	PWR
C1	VSS	Analog	PWR
B36	VSS	Analog	PWR

Table 22-2. Pin Listing by Signal Name (Sheet 32 of 33)

Pin Name	Signal Name	Signal Buffer Type	Direction
B35	VSS	Analog	PWR
B34	VSS	Analog	PWR
B33	VSS	Analog	PWR
B31	VSS	Analog	PWR
B28	VSS	Analog	PWR
B25	VSS	Analog	PWR
B22	VSS	Analog	PWR
B19	VSS	Analog	PWR
B14	VSS	Analog	PWR
B11	VSS	Analog	PWR
B8	VSS	Analog	PWR
B5	VSS	Analog	PWR
B3	VSS	Analog	PWR
B2	VSS	Analog	PWR
A35	VSS	Analog	PWR
A34	VSS	Analog	PWR
A33	VSS	Analog	PWR
A32	VSS	Analog	PWR
A29	VSS	Analog	PWR
A26	VSS	Analog	PWR
A23	VSS	Analog	PWR
A20	VSS	Analog	PWR
A17	VSS	Analog	PWR
A16	VSS	Analog	PWR
A13	VSS	Analog	PWR
A10	VSS	Analog	PWR
A7	VSS	Analog	PWR
A4	VSS	Analog	PWR
A3	VSS	Analog	PWR
R24	VTTDDR	Analog	PWR
U25	VTTXDP	Analog	PWR
AG36	XDPCLK1XN	DDR	O
AH36	XDPCLK1XP	DDR	O
W33	XDPDQ[0]	DDR	I/O
W36	XDPDQ[1]	DDR	I/O
AA36	XDPDQ[10]	DDR	I/O
AA33	XDPDQ[11]	DDR	I/O
AE36	XDPDQ[12]	DDR	I/O
AC34	XDPDQ[13]	DDR	I/O
AB36	XDPDQ[14]	DDR	I/O

Table 22-2. Pin Listing by Signal Name (Sheet 33 of 33)

Pin Name	Signal Name	Signal Buffer Type	Direction
AB34	XDPDQ[15]	DDR	I/O
V33	XDPDQ[2]	DDR	I/O
V36	XDPDQ[3]	DDR	I/O
Y34	XDPDQ[4]	DDR	I/O
V35	XDPDQ[5]	DDR	I/O
W34	XDPDQ[6]	DDR	I/O
U35	XDPDQ[7]	DDR	I/O
AD36	XDPDQ[8]	DDR	O
AB33	XDPDQ[9]	DDR	I/O
Y35	XDPDQSN[0]	DDR	I/O
AC35	XDPDQSN[1]	DDR	I/O
AA35	XDPDQSP[0]	DDR	I/O
AD35	XDPDQSP[1]	DDR	I/O
Y31	XDPRDYACK_N	DDR	O
W31	XDPRDYREQ_N	DDR	I

22.3 Package Information
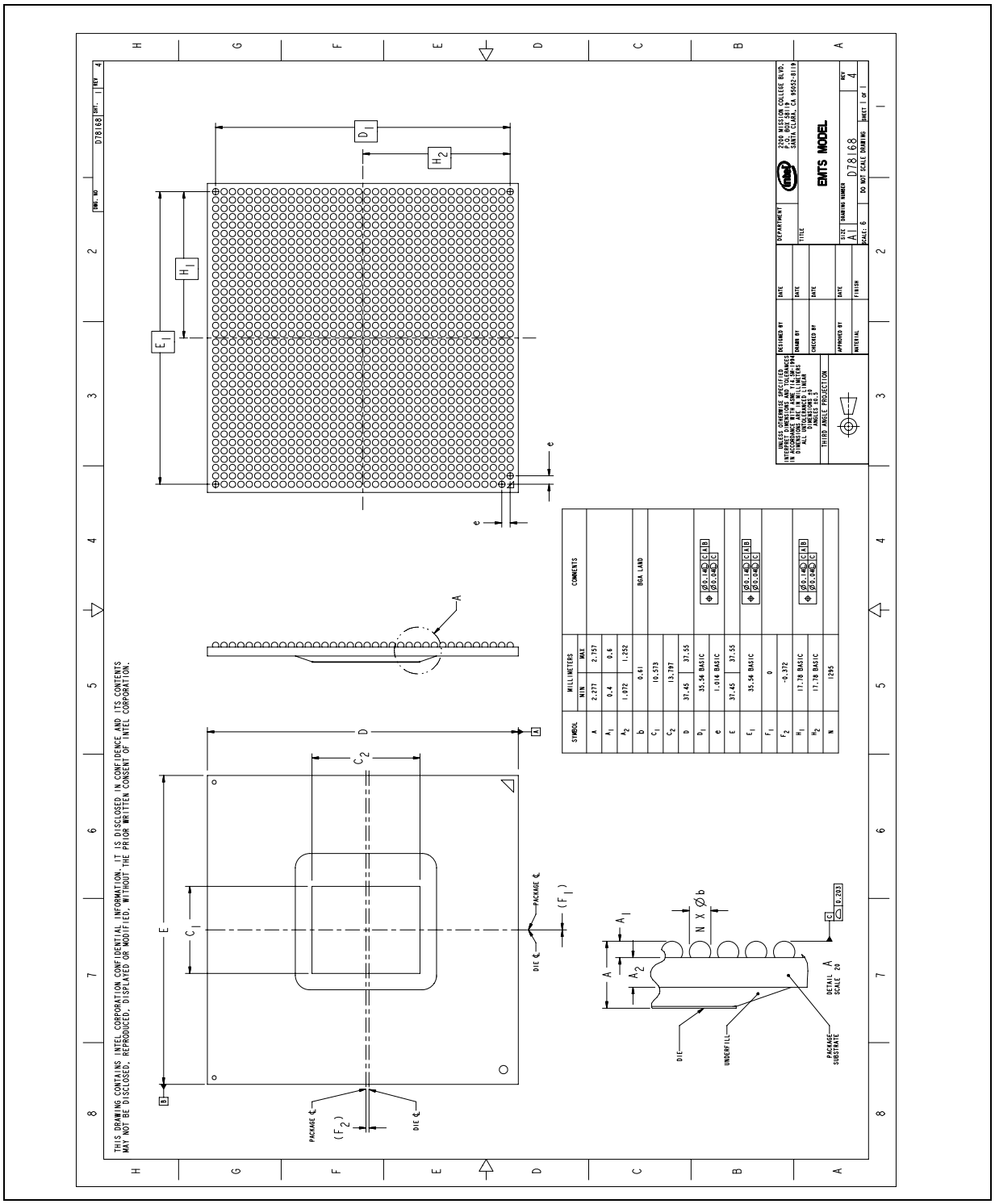
Figure 22-5. Package Diagram